Product End-of-Life Disassembly Instructions

Product Category: Monitors and Displays
Marketing Name / Model [List multiple models if applicable.]
HP ZR24w LCD Monitor
Name / Model #3
Name / Model #4
Name / Model #5

Purpose: The document is intended for use by end-of-life recyclers or treatment facilities. It provides the basic instructions for the disassembly of HP products to remove components and materials requiring selective treatment, as defined by EU directive 2002/96/EC, Waste Electrical and Electronic Equipment (WEEE).

1.0 Items Requiring Selective Treatment

1.1 Items listed below are classified as requiring selective treatment.
1.2 Enter the quantity of items contained within the product which require selective treatment in the right column, as applicable.

Item Description	Notes	Quantity of items included in product
Printed Circuit Boards (PCB) or Printed Circuit Assemblies (PCA)	With a surface greater than 10 sq cm PWB-1333(M/B), PWB-1336(P/I broad), PWB-1347(Inverter broad)	3
Batteries	All types including standard alkaline and lithium coin or button style batteries	N/A
Mercury-containing components	For example, mercury in lamps, display backlights, scanner lamps, switches, batteries	6 Lamps
Liquid Crystal Displays (LCD) with a surface greater than 100 sq cm	Includes background illuminated displays with gas discharge lamps	1
Cathode Ray Tubes (CRT)		N/A
Capacitors / condensers (Containing PCB/PCT)		N/A
Electrolytic Capacitors / Condensers measuring greater than 2.5 cm in diameter or height	T801, T802, T803, T804, T805, T806, T807, T808, T809, T810, T811,T812 on the inverter board, C911,T901, L903, T902 On the power PCB	16
External electrical cables and cords	Power cord, VGA cable, DVI-D cable, DP cable, USB cable	5
Gas Discharge Lamps	Heeseng	6 Lamps
Plastics containing Brominated Flame Retardants		N/A
Components and parts containing toner and ink, including liquids, semi-liquids (gel/paste) and toner	Include the cartridges, print heads, tubes, vent chambers, and service stations.	N/A

Components and waste containing asbestos		N/A
Components, parts and materials containing refractory ceramic fibers		N/A
Components, parts and materials containing radioactive substances		N/A

2.0 Tools Required

List the type and size of the tools that would typically be used to disassemble the product to a point where components and materials requiring selective treatment can be removed.

Tool Description	Tool Size (if applicable)
cruciform screw driver	5.5mm
Hex driver socket type	5 mm
cruciform screw driver	3 mm
cruciform screw driver(LGD	
Description #5	

3.0 Product Disassembly Process

3.1 List the basic steps that should typically be followed to remove components and materials requiring selective treatment:

1. Switch sanp
2. Lift up Display Head
3. Remove four screws on VESA mounting
4. Use disassembly hole then remove bucket
5. Remove bezel and panel
6. Remove button and lens
7. Remove four screws then separate panel and chassis
8. Remove five screws on bracke
9. Remove six screws to tear down M/B and P/I board

3.2 Optional Graphic. If the disassembly process is complex, insert a graphic illustration below to identify the items contained in the product that require selective treatment (with descriptions and arrows identifying locations).

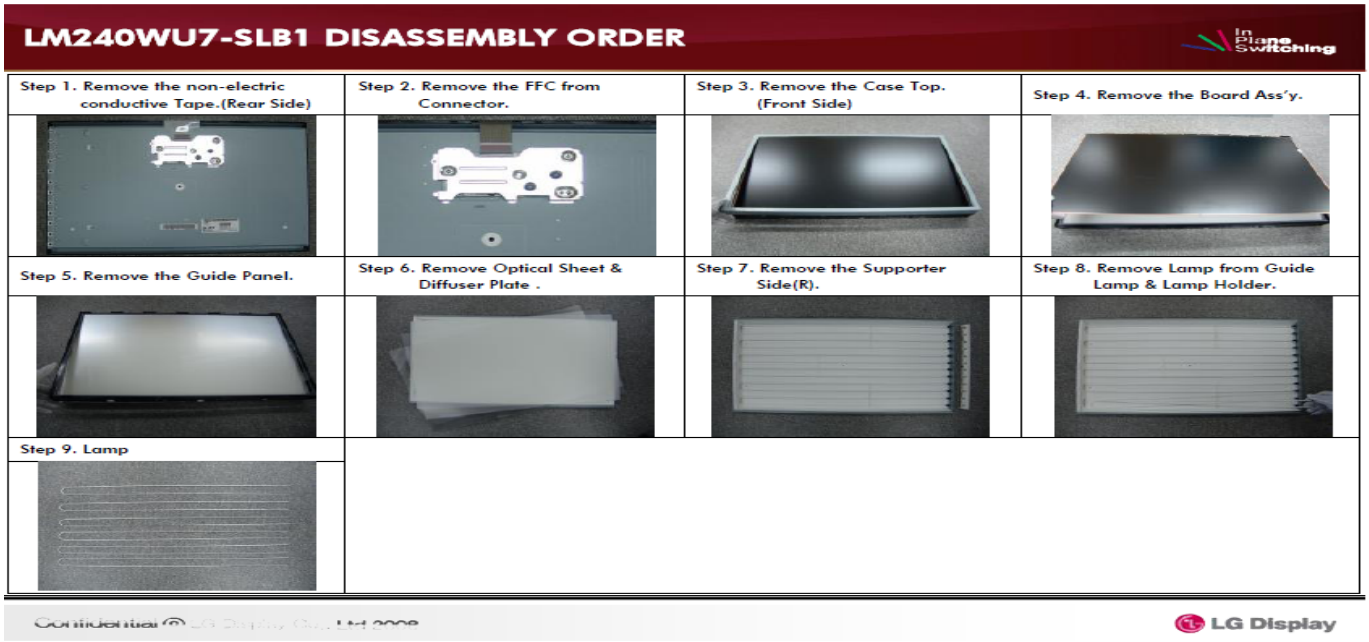

The Disassembly Procedure

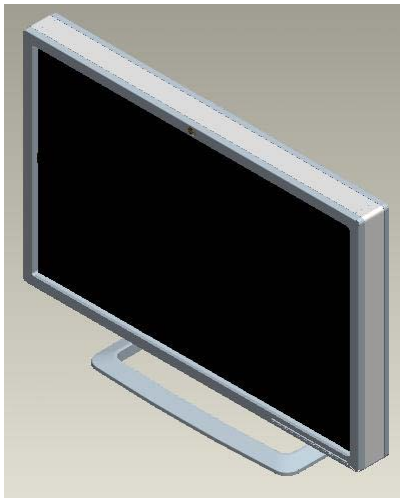

1.Switch Snap

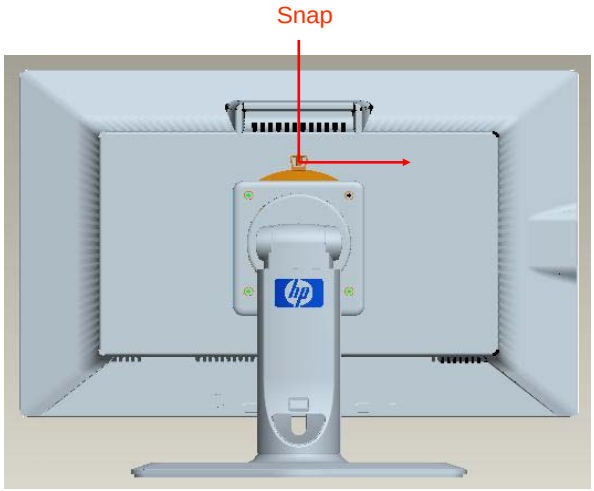

2.Lift up Display Head

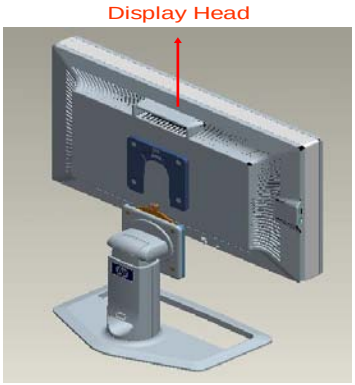

3.Remove four screw

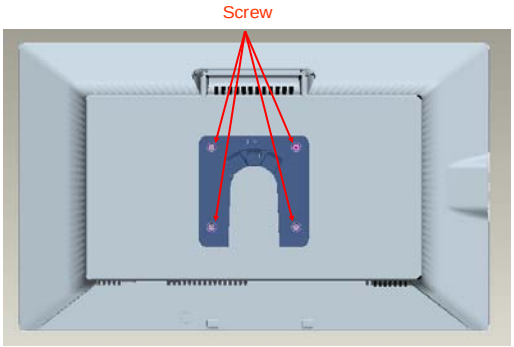

4.Remove Quick Release

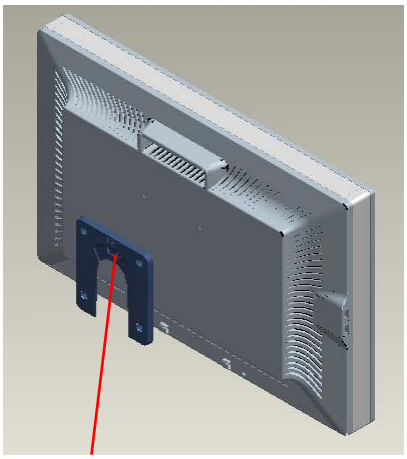

5.Use Disassembly Hole , then remove Bucket

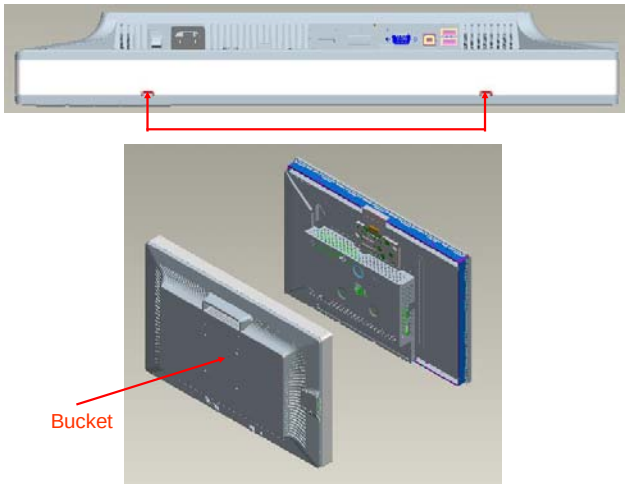

6.Remove Bezel and Panel

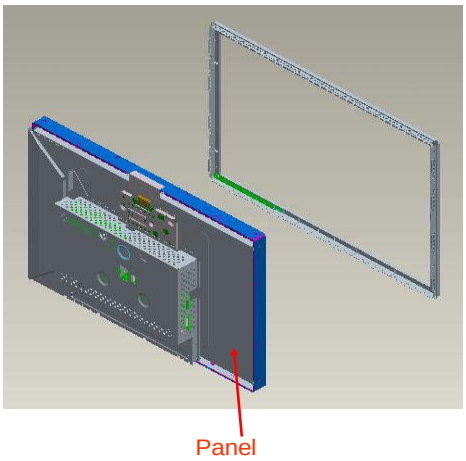

7.Remove Button and Lens

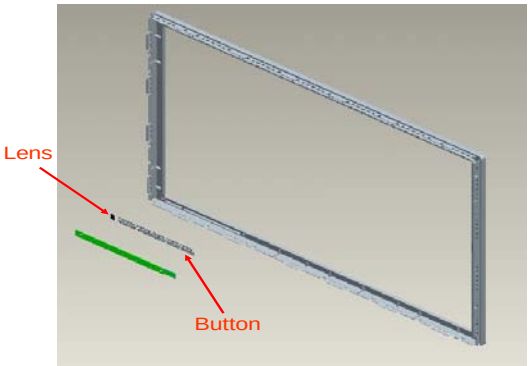

8.Remove four screw , then separate Panel and Chassis

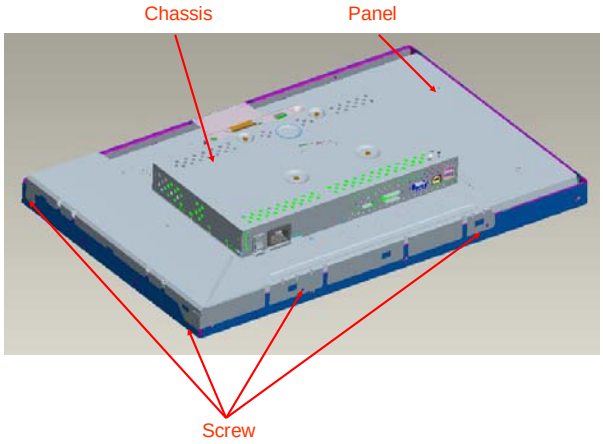

8.Remove five screw

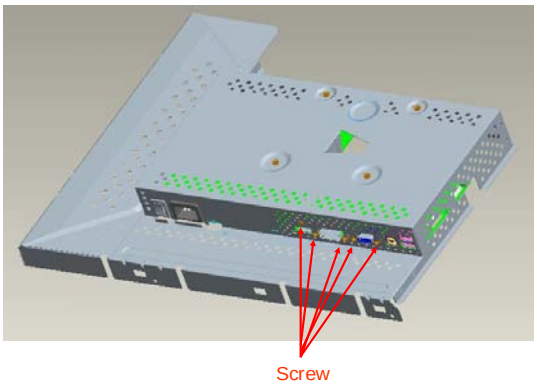

9.Remove six screw