PHILIPS

*Dream*Station 2

CPAP

Auto CPAP

User manual

© Koninklijke Philips N.V., 2025. All rights reserved.

Contents

1. Safety Information 1
Intended use 1
Important 1
Contraindications 1
Warnings 2
Cautions 7
Symbols glossary 9
System contents 11
How to contact Philips Respironics 11
2. System overview 12
Device with integrated humidifier 12
Humidifier water tank 14
3. Device Setup 16
Where to place the device 16
Supplying AC power to the device 16
Setting up the integrated humidifier 18
Removing the humidifier water tank 19
Filling and connecting the water tank 20
Installing/replacing the air filters 22
Connecting the breathing circuit 24
Starting the device 25
Performance check 26
Bluetooth wireless technology* 26
Pairing your therapy device to your Bluetooth-enabled mobile device 27
Therapy Off display 31
Device settings (language, time, airplane mode, Bluetooth reset) 32
4. Pop-up messages and troubleshooting 33
Device pop-up messages 33
Alerts and notifications 33
Status pop-up messages 36
Troubleshooting 37
5. Connectivity 39
6. Accessories 40
SD card 40
Updating software using an SD card 40
Oximeter 41
Roll stand 42
Supplemental oxygen 42
DC power 42
Carrying case and airline travel 43

7. Cleaning, disinfection, and care 44
Air pathway contamination 44
Home cleaning: device exterior, heater plate, and humidifier air inlet/outlet seal 44
Home cleaning: humidifier water tank (lid, water tank base, and water tank seal) 45
Home disinfection: humidifier water tank (lid, water tank base, and water tank seal) 46
Home cleaning: tubing 46
Caring for the filters 47
Service 47
8. Technical specifications 48
Environmental 48
Physical 48
Service life 48
Standards compliance 48
IEC 60601-1 classification 49
Electrical 49
Water capacity 49
Heater plate 49
Humidity 49
Declared dual-number noise emissions values (in accordance with ISO 4871) 50
Pressure accuracy 50
Maximum flow rate (typical) 51
ISO 80601-2-70 Pneumatic Diagram 51
Wireless notices 52
Radio Specifications 53
Cellular 53
Bluetooth 54
Intake Port Filters 54
Heated Tubing Specifications 54
Disposal 54
9. EMC information 55
FAA Compliance 61
Limited Warranty 66

1. Safety Information

Intended use

The DreamStation 2 CPAP/DreamStation 2 Auto CPAP system delivers positive airway pressure therapy for the treatment of Obstructive Sleep Apnea in spontaneously breathing patients weighing over 30 kg (66 lbs). It is for use in the home or hospital/institutional environment.

Important

The device is to be used only on the instruction of a licensed physician. Your home care provider will set the correct pressure settings and will provide accessories according to your health care professional's prescription.

Several accessories are available to make your OSA treatment with the DreamStation 2 system as convenient and comfortable as possible. To ensure that you receive the safe, effective therapy prescribed for you, use only Philips Respironics approved accessories.

Contraindications

When assessing the relative risks and benefits of using this equipment, the clinician should understand that this device can deliver pressures up to 20 cmH_2O. In the event of certain fault conditions, a maximum pressure of 40 cmH_2O is possible. Studies have shown that the following pre-existing conditions may contraindicate the use of CPAP therapy for some patients:

- Bullous Lung Disease
- Pathologically Low Blood Pressure
- Bypassed Upper Airway
- Pneumothorax
- Pneumocephalus has been reported in a patient using nasal Continuous Positive Airway Pressure. Caution should be used when prescribing CPAP for susceptible patients such as those with: cerebral spinal fluid (CSF) leaks, abnormalities of the cribriform plate, prior history of head trauma, and/or pneumocephalus. (Chest 1989; 96:1425-1426)

The use of positive airway pressure therapy may be temporarily contraindicated if you exhibit signs of a sinus or middle ear infection. Not for use with patients whose upper airways are bypassed. Contact your health care professional if you have any questions concerning your therapy.

Warning: Cleaning and disinfection methods using Ozone-based products are not approved or recommended, and may adversely affect your device safety and performance.

Note: Any damage caused by unapproved ozone cleaning and disinfection methods or other unapproved cleaning and disinfection methods will not be covered by the Philips Limited Warranty.

Warnings

A warning indicates the possibility of injury to the user or operator.

Device usage	This device is not intended for life support.
	Contact your health care professional if symptoms of sleep apnea recur.
Personnel qualifications	This manual serves as a reference. The instructions in this manual are not intended to supersede your health care professional's instructions regarding the use of the device.
	The prescription and other device settings should only be changed on the order of the supervising physician.
	The operator should read and understand this entire manual before using the device.
Operating temperature	Do not operate the device in direct sunlight or near a heating appliance because these conditions can increase the temperature of the air coming out of the device.
Bacteria filter	If the device is used by multiple persons in a hospital environment (such as rental devices), a low-resistance, main flow bacteria filter should be installed in-line between the device and the circuit tubing to prevent contamination.
	Humidification can increase the resistance of the bacteria filter and the operator must monitor the bacteria filter frequently for increased resistance and blockage to ensure the delivery of the therapeutic pressure.
Improperly functioning device	If you notice any unexplained changes in the performance of the device, if it is making unusual sounds, if it has been dropped or mishandled, if water is spilled into the enclosure, or if the enclosure is cracked or broken, discontinue use and contact your home care service provider.

Power cord	Route the power cord to the outlet in a way that will prevent the cord from being tripped over or interfered with by chairs or other furniture.
	To avoid strangulation hazards, ensure that all cords connected to the device are properly routed.
	This device is activated when the power cord is connected.
	Use only power cords supplied by Philips Respironics for this device. Use of power cords not supplied by Philips Respironics may cause overheating or damage to the device.
Patient circuits and tubing	The device should only be used with compatible patient interfaces (e.g., masks, circuits and exhalation ports). Proper operation of the device with other circuits has not been verified by Philips Respironics and is the responsibility of the health care professional. A mask should not be used unless the device is turned on and operating properly. The exhalation port(s) associated with the mask should never be blocked. Explanation of warning: The device is intended to be used with special masks or connectors that have exhalation ports to allow continuous flow of air out of the mask. When the device is turned on and functioning properly, new air from the device flushes the exhaled air out through the mask exhalation port. However, when the device is not operating, enough fresh air will not be provided through the mask, and exhaled air may be rebreathed. Rebreathing of exhaled air can, in some circumstances, lead to suffocation.
	If you are using a full face mask (a mask covering both your mouth and your nose), the mask must be equipped with a safety (entrainment) valve.
	An exhalation port is required. Do not block the exhalation port. This can reduce airflow and result in rebreathing of exhaled air.
	At low expiratory pressures, the flow through the exhalation port may be inadequate to clear all exhaled gas from the tubing – some rebreathing may occur.
	Do not pull or stretch the tubing. This could result in circuit leaks.
	Do not cover the tubing with a blanket or heat it in an incubator or with an overhead heater. This can affect the quality of the therapy or injure the patient.
	The device should only be used with a compatible Philips Respironics mask, as prescribed by your Healthcare Provider.

Accessories	To ensure that you receive the safe, effective therapy prescribed for you, use only Philips Respironics accessories. The use of accessories, transducers, and cables other than those specified by Philips Respironics may result in increased emissions or decreased immunity of the device.
Pulse oximeter	Use only Philips Respironics recommended pulse oximeter and sensors. Use of incompatible sensors can result in inaccurate pulse oximeter performance.
	Do not use a damaged pulse oximeter or sensor.
	Before use, carefully read these instructions and the instructions for use provided with the pulse oximeter and sensor.
Integrated humidifier	For safe operation when using the integrated humidifier, the device must always be positioned below the breathing circuit connection at the mask. The device must be level for proper operation.
	Allow the heater plate and water to cool down for approximately 15 minutes before removing the humidifier water tank. A burn may result from: touching the heater plate, coming in contact with the heated water, or touching the humidifier water tank pan.
	Do not use the humidifier at an altitude above 2286 m (7500 ft) or outside a temperature of 5°C to 35°C (41° to 95°F). Using the humidifier outside of this temperature range or above this altitude can affect the quality of the therapy or injure the patient.
Cleaning	To avoid electrical shock, always unplug the power cord from the wall outlet before cleaning the device.
	Do not immerse the device in any fluids or spray the device with water or cleaners. Clean the device with a cloth dampened with an approved cleaner.
	Empty and clean the humidifier water tank daily to prevent mold and bacteria growth.

Oxygen	When using oxygen with this system, the oxygen supply must comply with local regulations for medical oxygen.
	Do not connect the device to an unregulated or high pressure oxygen source.
	When using oxygen with this system, a Philips Respironics pressure valve must be placed in-line with the patient circuit between the device and the oxygen source. The pressure valve helps to prevent the back flow of oxygen from the patient circuit into the device when the unit is off. Failure to use the pressure valve could result in a fire hazard.
	Oxygen supports combustion. Oxygen should not be used while smoking or in the presence of an open flame.
	Do not use the device in the presence of a flammable anaesthetic mixture in combination with oxygen or air, or in the presence of nitrous oxide.
	Do not use the device near a source of toxic or harmful vapors.
	When using oxygen with this system, turn the device on before turning on the oxygen. Turn the oxygen off before turning the device off. This will prevent oxygen accumulation in the device. **Explanation of the Warning**: When the device is not in operation and the oxygen flow is left on, oxygen delivered into the tubing may accumulate within the device's enclosure. Oxygen accumulated in the device enclosure will create a risk of fire.

EMC	Use of this equipment adjacent to or stacked with other equipment should be avoided because it could result in improper operation. If such use is necessary, this equipment and the other equipment should be observed to verify that they are operating normally
	Portable and Mobile RF Communications Equipment can affect Medical Electrical Equipment. See the EMC section of this manual for distances to observe between RF Generators and the ventilator to avoid interference.
	Do not use this device near active high frequency surgical equipment and the Radio Frequency shielded room of a Medical Electrical system for magnetic resonance imaging, where the intensity of electromagnetic disturbances is high.
	The Health Industry Manufacturers Association recommends that a minimum separation of six inches be maintained between a wireless phone and a pacemaker to avoid potential interference with the pacemaker. The DreamStation 2 on-board *Bluetooth* communication should be considered a wireless phone in this regard.
	This device should not be used near electronic security systems (e.g., metal detectors, electronic article surveillance), wireless power transfer (WPT), Cellular 5G, and unique medical emitters such as electrocautery, and diathermy equipment, where the intensity of EM DISTURBANCES may be high.
Maintenance	Never operate the device if any parts are damaged or if it is not working properly. Replace damaged parts before continuing use.
	Periodically inspect electrical cords, cables, tubing, and accessories for damage or signs of wear. Discontinue use and replace if damaged.
	Repairs and adjustments must be performed by Philips Respironics-authorized service personnel only. Unauthorized service could cause injury, invalidate the warranty, or result in costly device damage. Contact your home care service provider for maintenance.
	Do not use the device if the humidifier water tank is leaking or damaged. Replace any damaged parts before continuing use.

Cautions

A caution indicates the possibility of damage to the device.

Electrostatic Discharge (ESD)	Do not use antistatic or conductive hoses or conductive patient tubing with the device.
	Pins of connectors marked with the ESD warning symbol shall not be touched and connections shall not be made without special precautions. Precautionary procedures include methods to prevent build-up of electrostatic charge (e.g., air conditioning, humidification, conductive floor coverings, non-synthetic clothing), discharging one's body to the frame of the equipment or system or to earth. It is recommended that all individuals that will handle this device understand these precautionary procedures at a minimum as part of their training.
Condensation	Condensation may damage the device. If the device has been exposed to either very hot or very cold temperatures, allow it to adjust to room temperature (operating temperature) for 24 hours before starting therapy. Do not operate the device outside of the environmental operating ranges listed in the "Technical specifications" section later in this manual.
Filters	A properly installed, undamaged Philips Respironics reusable pollen filter is required for proper operation.
	Dirty inlet filters may cause high operating temperatures that may affect device performance. Regularly examine the inlet filters as needed for integrity and cleanliness.
	Never install a wet filter into the device. You must ensure sufficient drying time for the cleaned filter.
	Make sure the air inlet (slotted) area on the side of the device is not blocked by bedding, curtains, or other items. Air must flow freely around the device for the system to work properly.

DC power	Always ensure that the DC power cord securely fits into your therapy device prior to use. Contact your home care service provider to determine if you have the appropriate DC cord for your specific therapy device.
	When DC power is obtained from a vehicle battery, the device should not be used while the vehicle's engine is running. Damage to the device may occur.
	Only use a Philips Respironics DC power cord and battery adapter cable. Use of any other system may cause damage to the device.
Tobacco use	Tobacco smoke may cause tar build up within the device.
Device placement	Do not place the device in or on any container that can collect or hold water. Take precautions to protect furniture from water damage.
	Do not place the device directly onto carpet, fabric, or other flammable materials.
	Do not plug the device into an outlet controlled by a wall switch.
	Do not move the device while the humidifier water tank has water in it.
Humidifier water tank	Remove the humidifier water tank, empty all water, and replace the empty humidifier water tank before transporting the device.
	Do not fill the humidifier water tank above the maximum fill line. If the humidifier water tank is overfilled, water may leak into the therapy device, humidifier, or onto your furniture. Damage to the humidifier or therapy device may occur.
	Use only room temperature distilled water in the humidifier water tank. Do not put any chemicals or additives into the water. Possible airway irritation or damage to the humidifier water tank may result.
	If using the integrated humidifier, do not start therapy without the humidifier water tank installed.
	Do not attempt to fill the humidifier water tank while it is still connected to the device.

Cleaning	Do not immerse the device or allow any liquid to enter the enclosure or the inlet filter.
	Do not steam autoclave the device. Doing so will destroy the device.
	Do not use harsh detergents, abrasive cleaners, or brushes to clean the system.
	Only the cleaning procedures listed in this manual are recommended by Philips Respironics. Use of other cleaning processes, not specified by Philips Respironics, may affect the performance of the product.

Notice: Any serious incident that has occurred in relation to this device should be reported to Philips and the competent authority of the Member State in which the user and/or patient is established.

Note: An electronic copy of these instructions can be found at: www.philips.com/IFU.

Symbols glossary

The following symbols may appear on the device, power supply, accessories, and packaging.

Symbol	Title and Meaning	Symbol	Title and Meaning
	Refer to instruction manual.		Type BF applied part To identify a type BF applied part complying with IEC 60601-1.
	Consult instructions for use.		DC power (Direct current)
www.philips.com/IFU	Electronic instructions for use Indicates that relevant information for use of the product is available in electronic form	IP22	Drip proof equipment
	For indoor use only Equipment is designed primarily for indoor use.		Approved for airline use.
MR	MR unsafe Do not use device in a Magnetic Resonance (MR) environment.	MAX	Maximum fill line

Symbol	Title and Meaning	Symbol	Title and Meaning
	Bluetooth® symbol Indicates the device has *Bluetooth* capabilities.		Warning: Hot surface
UDI	Unique Device Identifier Indicates the Unique Device Identifier information.		Packaging unit To indicate the number of pieces in the package.
~	AC power (Alternating current)		Class II equipment (Double Insulated) To identify equipment meeting the safety requirements specified for Class II equipment.
	Caution, consult accompanying documents.		Do not disassemble.
1	Single patient use Indicates that the tubing is for single patient use only.		Keep away from sunlight Indicates the medical device needs protection from light sources.
	Importer Indicates the entity importing the medical device into the EU.	MD	Medical Device Indicates that the item is a medical device.
	Crossed-out wheeled bin Marking of EEE (electrical and electronic equipment). Follow local requirements for proper disposal.		Do not use if package is damaged. Contact Philips Respironics.
CC	Date of Manufacture: to indicate the date on which a product was manufactured Country of Manufacturer: to indicate the country of manufacture of the product Note: When applied to the label, “CC” is replaced by the two letter country code		

System contents

Your system may include the following items:

- Device
- Humidifier water tank
- User manual
- Quick start guide
- Carrying case
- SD Card
- Reusable filter
- Disposable ultra-fine filter (optional)
- Flexible Tubing
- 5 ft. (1.52 m) power cord
- Power supply

How to contact Philips Respironics

Should you experience trouble with this equipment or require assistance setting up, using, or maintaining the device or accessories, please contact your home care provider. If you need to contact Philips Respironics directly, contact customer service at +1-724-387-4000, or go to www.respironics.com to find your local customer service contact information.

2. System overview

The DreamStation 2 CPAP/DreamStation 2 Auto CPAP is a Continuous Positive Airway Pressure therapy device designed for the treatment of Obstructive Sleep Apnea (OSA).

The integrated humidifier and optional heated tubing is designed to deliver humidification to provide added comfort during therapy. This humidification level is controlled through the output of the heated humidifier as well as the temperature of the optional heated tubing. Use of the integrated humidifier with the heated tubing allows for a comfortable level of humidity to be maintained at the mask.

Several accessories are also available for use with your device. Contact your home care provider to purchase any accessories not included with your system.

Device with integrated humidifier

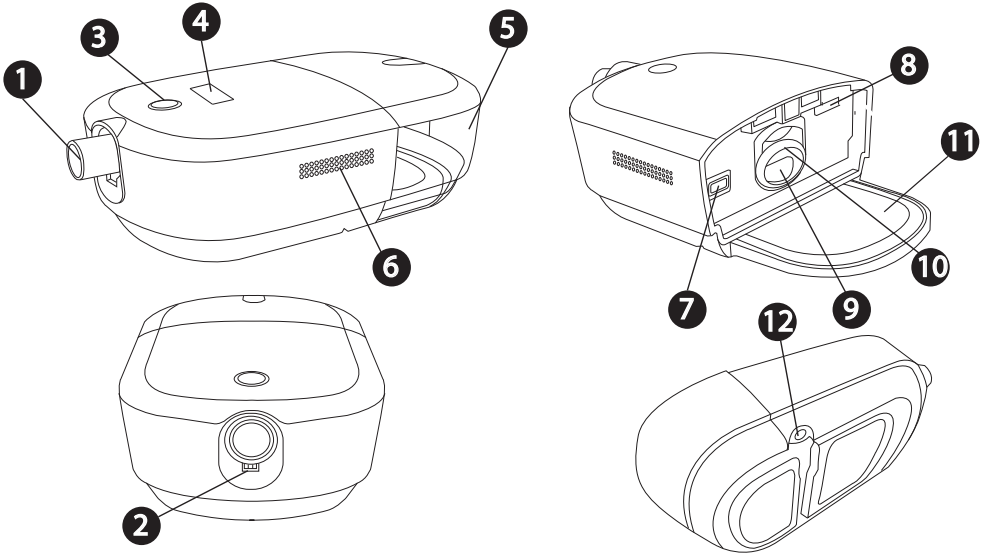

#	Feature	Description	#	Feature	Description
1	Air outlet port	Connect the flexible tubing here	7	Filter access	Access the filter here.
2	Heated tubing pin connector	Line up and connect the heated tubing connector here	8	SD card access	Access the SD card here.
3	Therapy on/off button	Starts and stops the airflow for therapy.	9	Air inlet for the humidifier	Connects to the humidifier water tank
4	Display screen	This is the User Interface for the therapy device.	10	Humidifier air inlet/outlet seal	Provides a seal between the device and the humidifier water tank.
5	Humidifier water tank	Removable water tank that holds the water for humidification (shown installed)	11	Heater plate	Warms the water in the water tank
6	Air inlet	Delivers air to the device	12	Power inlet	Connect the power cord here

Humidifier water tank

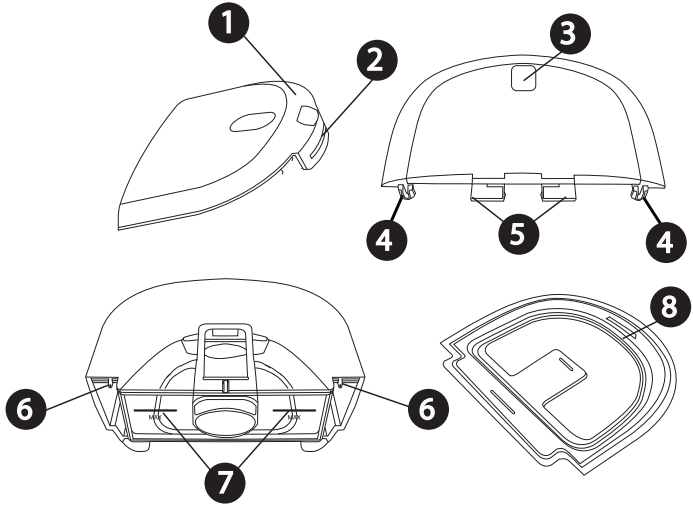

#	Feature	Description
1	Lid	Removable to fill the water tank.
2	Lid front tab	Remove lid from here
3	Water tank release indent	Unlatches water tank from the device when pressed
4	Lid hooks	Connect over water tank base tabs
5	Water tank latch	Latches the water tank to the device
6	Water tank base tabs	Connect water tank lid hooks here to attach the water tank lid
7	Maximum fill lines	Indicate the maximum water level for safe operation. The fill lines also appear on the sides of the water tank base.
8	Water tank seal	Provides a seal between the water tank lid and base. Removable for ease of cleaning.
9	Grip indent (not shown)	Grip indent, located on the bottom of the water tank base, for tank removal

3. Device Setup

Where to place the device

Place the device on a firm, flat surface somewhere within easy reach of where you will use it at a level lower than your sleeping position. Make sure the device is away from any heating or cooling equipment (e.g., forced air vents, radiators, air conditioners).

Note: Remove all protective film prior to use.

Note: When positioning the device, make sure that the power cable is accessible because removing power is the only way to turn off the device.

Cautions

- Make sure the air inlet (slotted) area on the side of the device is not blocked by bedding, curtains, or other items. Air must flow freely around the device for the system to work properly.
- Do not place the device directly onto carpet, fabric, or other flammable materials.
- Do not place the device in or on any container that can collect or hold water.

Supplying AC power to the device

Warning: Periodically inspect electrical cords and cables for damage or signs of wear. Discontinue use and replace if damaged.

Caution: Do not use extension cords with this device.

Complete the following steps to operate the device using AC power and refer to the following images for guidance:

1. Ensure that the humidifier tank is empty.
2. Plug the power supply cord's connector into the power inlet on the bottom of the device ❶ or ❷.

   For convenience, the power connection allows for the cord to connect and route in the direction that works best for your setup.

   An inset area on the bottom of the device allows the cord to be routed under the device ❸.

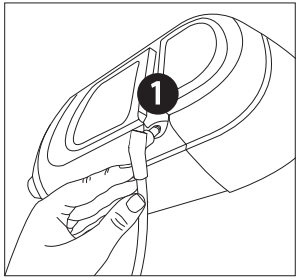

OR

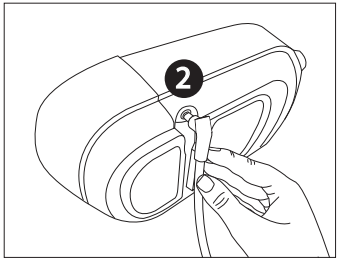

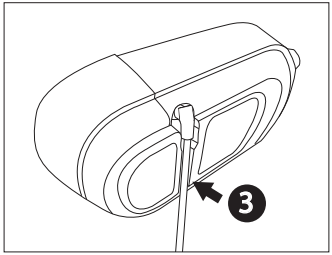

3. Plug the socket end of the AC power cord into the power supply ❹.
4. Plug the pronged end of the AC power cord into an electrical outlet that is not controlled by a wall switch ❺.
5. Verify that the connections on the bottom of the device, at the power supply, and at the electrical outlet are fully inserted. This will help to ensure that a secure, reliable electrical connection has been made.

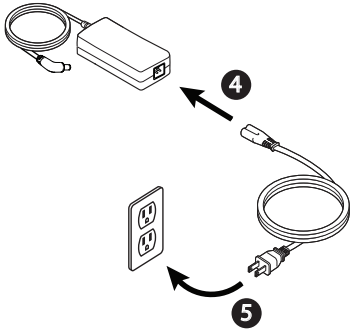

Note: Example only shown here. Local electrical outlet and power cord may vary.

Important: To remove AC power, disconnect the power supply cord from the electrical outlet.

Setting up the integrated humidifier

Warning: Allow the humidifier heater plate and water to cool down for approximately 15 minutes before removing the water tank. A burn may result from: touching the heater plate, coming in contact with the heated water, or touching the tank pan.

Cautions

- Do not attempt to fill the tank while it is still attached to the device.
- Use only room temperature distilled water in the tank. Do not put any chemicals or additives into the water. Possible airway irritation or damage to the water tank may result.
- Do not fill the water tank above the maximum fill line. If the water tank is overfilled, water may leak into the therapy device, humidifier, or onto your furniture. Damage to the humidifier or therapy device may occur.

Note: Clean the humidifier water tank before first use. Refer to the “Home cleaning: humidifier water tank” section in this manual.

Removing the humidifier water tank

1. Gently press down on the indented area on the top of the humidifier water tank to unlatch the tank from the device.

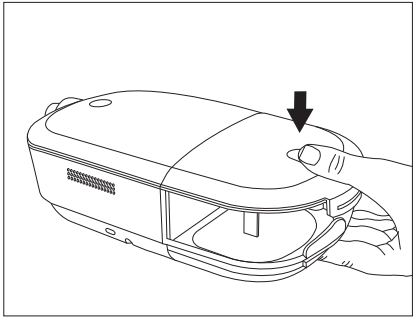

2. Grip the top and bottom of the humidifier water tank and slide it out away from the device.

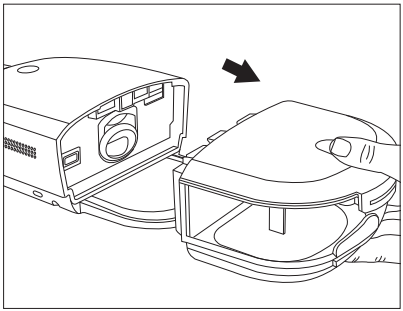

3. Remove the lid by pulling up on the lid tab while holding the water tank base.

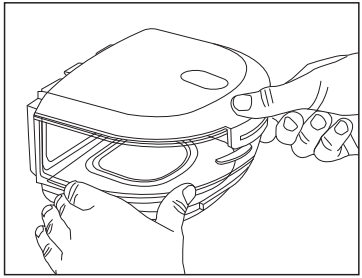

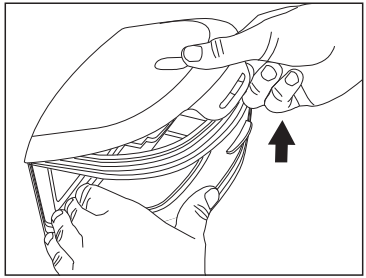

4. Pour out any remaining water and rinse the water tank base.

Filling and connecting the water tank

1. Place the water tank base on a firm, flat surface. Fill the water tank with distilled water no higher than the maximum fill lines MAX, which are located on the back and sides of the water tank base.

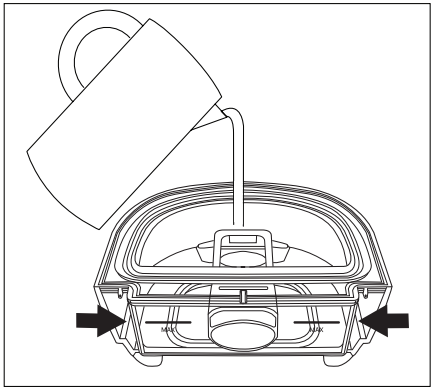

2. Reattach the lid. Place the hooks on the lid ❶ over the small tabs on the water tank base ❷.

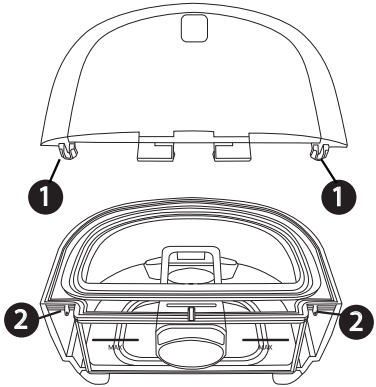

3. Press down ❸ until the lid snaps securely over the lid front tab ❹ on the front of the water tank base.

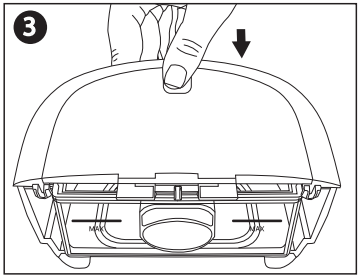

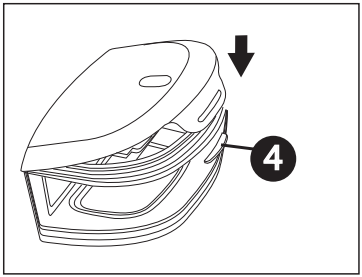

4. Slide the humidifier water tank back into the device, using the tracks on the bottom of the water tank base for proper alignment and connection. Ensure that it is latched into place before proceeding.

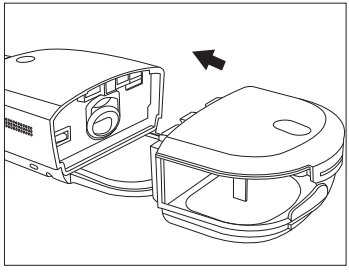

Installing/replacing the air filters

Caution: A properly installed, undamaged Philips Respironics reusable pollen filter is required for proper operation.

The device uses a grey reusable pollen filter that can be rinsed and a blue disposable ultra-fine filter. The reusable filter screens out normal household dust and pollens, while the ultra-fine filter provides more complete filtration of very fine particles. The reusable filter must be in place at all times when the device is operating. The ultra-fine filter is recommended for people who are sensitive to tobacco smoke or other small particles.

The grey reusable filter is supplied with the device. A disposable blue ultra-fine filter may also be included. If a filter is not installed when you receive your device, you must at least install the reusable filter before using the device.

1. Remove the humidifier water tank from the device. See the “Removing the humidifier water tank” section later in this manual.

2. To remove an existing filter, pull the white tab on the end of the filter and pull the filter out of the device

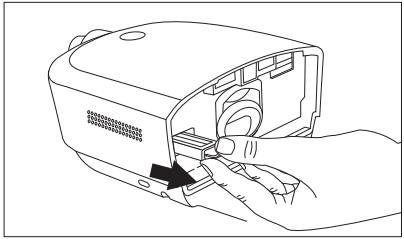

3. If applicable, place a dry, grey reusable pollen filter on top of a new, optional disposable blue ultra-fine filter, align the arrows on both filters, and firmly snap them together.
4. Place the filter into the therapy device.

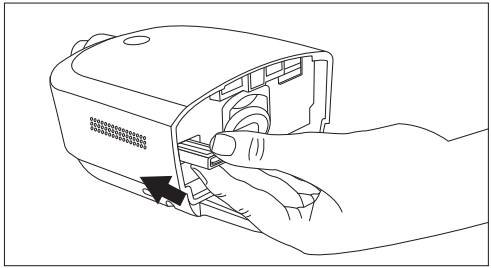

5. Reinstall the humidifier water tank.

Connecting the breathing circuit

To use the system, you will need the following accessories in order to assemble the recommended breathing circuit:

- Philips Respironics interface (nasal mask or full face mask) with integrated exhalation port, or Philips Respironics interface with a separate exhalation device (such as the Whisper Swivel II)
- Philips Respironics flexible tubing (12, 15, or 22 mm standard tubing or 12 or 15 mm heated tubing), 1.83 m (6 ft.)
- Philips Respironics headgear (for the mask)

Warnings

- **Do not pull or stretch the tubing. This could result in circuit leaks.**
- **Inspect the tubing for damage or wear. Discard and replace the tubing as necessary.**
- **If you are using a full face mask (a mask covering both your mouth and your nose), the mask must be equipped with a safety (entrainment) valve.**
- **If the device is used by multiple persons (such as rental devices), a low-resistance, main flow bacteria filter should be installed in-line between the device and the circuit tubing to prevent contamination.**

To connect your breathing circuit to the device, complete the following steps.

Note: If you are using the optional 12 mm (non-heated) performance tubing, an adapter is required to connect to the therapy device.

Note: Tubing is identified on the cuff with the tubing identifier symbol: “12”, “15”, “HT12”, or “HT15”. 22 mm tubing contains no symbol.

1. Connect the flexible tubing to the air outlet on the therapy device.

   To connect heated tubing (shown), line up the pin connectors on the heated tube with the bottom of the air outlet port on the device. The clips at the end of the tubing should be aligned to the sides of the port.

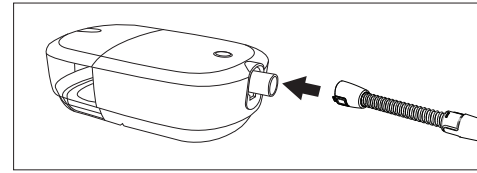

2. Press the heated tubing into place over the air outlet port until the tabs on the side of the tube click into place in the slots on the sides of the outlet port.

   If you are using standard tubing (not shown), simply slide the tubing over the air outlet port on the device.

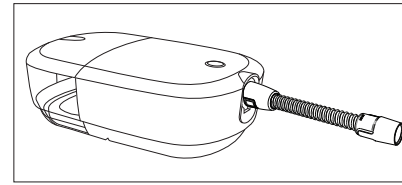

3. If you are using the optional 12 mm heated tubing or 12 mm performance tubing, connect the provided mask adapter to the mask connection end of the tubing. The 12mm performance tubing also requires a device adapter. When connecting the adapter to the CPAP, the clips should be aligned to the sides with the slight bump facing straight down.

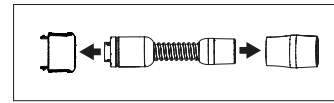

4. Connect the tubing to the mask. For proper placement and positioning, refer to the instructions that came with your mask.
5. Attach the headgear to the mask if necessary. Refer to the instructions that came with your headgear.

Starting the device

1. Ensure power is supplied to the device as indicated by a white ring around the therapy button. The first screen to display is the Philips logo, followed by the device model screen. Once fully powered on, the screen displays “To begin therapy click below”.

   Note: The device may prompt you to set the language and time.
2. Put on your mask assembly. Refer to the instructions supplied with the mask.

   A small amount of mask leak is normal and acceptable. Correct large amount of mask leaks or eye irritation by adjusting your mask headgear.

   Note: If you are using the device in a bed with a headboard, try placing the tubing over the headboard. This may reduce tension on the mask.

3. Press the Therapy button on top of the device to turn on airflow and begin therapy. The Therapy button ring will illuminate blue.

   Note: If your home care provider has enabled the Automatic On feature, the device will automatically turn the airflow on when you put on your mask and breathe.

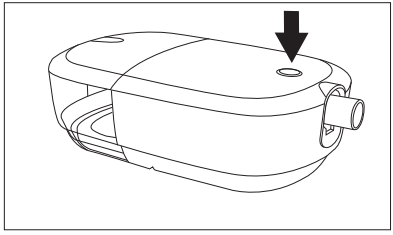

4. Press the Therapy button again to turn off the therapy. The Therapy button ring will illuminate white.

   Note: If your home care provider has enabled the Automatic Off feature, the device will automatically turn the airflow off when you take off your mask and the device recognizes inactivity.

Performance check

To initiate a performance check, unplug the device and plug it back in. An error will appear on the screen if a performance issue is detected.

Bluetooth wireless technology*

Bluetooth wireless technology is one method by which you can transfer your therapy device's data to DreamMapper. DreamMapper is a mobile system designed to help Obstructive Sleep Apnea (OSA) patients enhance their sleep therapy experience.

*Bluetooth wireless technology and DreamMapper are not available in all markets. For more information, please consult your local Philips Respironics representative.

Pairing your therapy device to your Bluetooth-enabled mobile device

Note: The blower must be off to allow Bluetooth pairing.

Note: You can only pair your therapy device to one mobile device at any given time.

Note: Pairing works best when your therapy device and mobile device are in the same room.

Note: The current version of DreamMapper will guide you through these instructions.

Note: After initiating pairing in DreamMapper, you will have 30 seconds to complete the setup. After this time, it will be cancelled automatically.

Follow the steps below to manually pair to your mobile phone or tablet.

1. With your therapy device powered up, initiate Bluetooth Setup from the DreamMapper mobile app.

   Note: From DreamMapper you may need to select from a list of available Bluetooth devices. The therapy device will appear as “PR BT XXXX” (XXXX will be the last four digits of the serial number listed on your therapy device).
2. The pairing code will display on the device.
3. In DreamMapper, confirm the 6-digit pairing code displayed on the therapy device.

   Note: When pairing from certain mobile devices you may need to enter the 6-digit pairing code in DreamMapper. Once entered, pairing will automatically begin.
4. Click the Therapy button to complete pairing. The therapy device displays “Pairing to Device” and then “Success Device Paired”.

Therapy On display

While the device is delivering therapy, the prescription pressure or RAMP PLUS pressure is displayed. You can also view and adjust your humidification and RAMP PLUS settings.

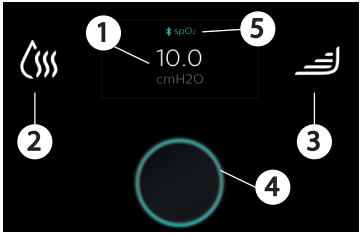

#	Symbol	Feature	Description
1	cmH2O	Therapy pressure	Displays the prescribed pressure setting. If RAMP PLUS is running, the current delivered pressure is displayed.
2		Adjustable humidifier setting (if enabled)	Tap the humidification symbol to view the current humidifier setting. To change the setting, tap the humidification icon again until the desired setting is displayed. Each tap will display a different setting. After approximately 3 seconds the display returns to the therapy screen and the setting is saved. The available settings are: Off, Low, Medium, and High. Note: If you adjust the humidifier setting during therapy, the new setting will automatically be active for current therapy, and it will be used the next time you turn therapy on. Stability value of the static temperature at the patient connection port when operating in normal condition: +/- 3.5°C

#	Symbol	Feature	Description
3		RAMP PLUS (Ramp+)	The device is equipped with a RAMP PLUS feature that allows you to adjust your starting pressure for a set period of time (default of 30 minutes) for added comfort when you are trying to fall asleep. During the set time, the air pressure will remain at your set starting pressure unless the device detects an event and identifies the need to increase your pressure. When RAMP PLUS has concluded, your prescribed therapy pressure will resume. To activate RAMP PLUS, tap the RAMP PLUS symbol. The first time RAMP PLUS is activated, the setting will default to Low. To change the setting, continue to tap the RAMP PLUS symbol until the desired setting is displayed. After approximately 3 seconds the display returns to the therapy screen and the setting is saved. Every therapy session thereafter will automatically start RAMP PLUS with the start of therapy. The available settings are: Off, Low (4 cmH_2O), Medium (6 cmH_2O), High (8 cmH_2O), and Max (10 cmH_2O). Note: There is no need to tap the RAMP PLUS symbol again unless you want to make a change to the RAMP PLUS pressure or restart RAMP PLUS. Note: The device screen goes dark after 60 seconds of inactivity. To wake up the screen, tap the RAMP PLUS icon or the humidification icon. This will simultaneously reactivate your RAMP PLUS pressure (if set), or it will take you to your prescribed minimum pressure level and continue to automatically adjust your delivered pressure as needed (if in Auto CPAP mode). Once the display appears, you can continue to adjust settings as desired.
4		Therapy button ring	The therapy button ring illuminates blue to indicate therapy is turned on. The ring does not illuminate when therapy is on and the screen has gone dark. The ring illuminates white when the device is plugged in and therapy is off.

#	Symbol	Feature	Description
5	spO2	Oximetry	The therapy device can pair to a pulse oximeter through a Bluetooth connection. When the therapy device successfully pairs to the pulse oximeter, the Bluetooth symbol and “SpO_2” will display on the therapy screen. See the “Oximeter” section later in this manual for additional information.
Not shown		Cell modem signal strength	Displays signal strength of cellular modem on devices that have the cellular modem available except when in Airplane Mode.
Not shown		Bluetooth	Displays when the device has Bluetooth available. When the symbol is grey, it indicates that Bluetooth is available. If the device is connected to a Bluetooth client (phone, tablet, etc.) it will appear white. This symbol does not appear when Airplane Mode is enabled.
Not shown		Airplane mode	Displays when Airplane Mode is enabled. It will replace the Cell and/or Bluetooth symbols when active.

Therapy Off display

After Therapy is turned off a series of screens that display a summary of your therapy may appear. A description of each screen is below. Each screen displays three times and then the screen displays:

To begin therapy

click below

Note: You can also restart therapy at any time by pressing the therapy button.

Display text	Description
Last Session Duration	This screen displays the amount of time you received therapy on the device for the most recent one day time frame.
Last Session AHI	This screen displays the nightly Apnea/Hypopnea index (AHI) value for the most recent one day time frame.
Last Session Mask fit	This screen displays how your mask fit during the most recent one day time frame. A display of “Good fit” indicates that the leak found allows for optimal performance of the device. A display of “Adjust fit” indicates that the leak may affect device performance, however, the device will remain functional and deliver therapy. If “Adjust fit” displays, adjust your mask to reduce the leak before starting therapy again.

Device settings (language, time, airplane mode, Bluetooth reset)

The device settings screens allow you to reset the device language and time and Bluetooth connections. You also can turn Airplane Mode on and off.

Follow the steps below to navigate through the device settings screens. For each setting, press and hold the Therapy button to complete the action, or click the Therapy button to cancel the action.

Note: To reset Bluetooth connections and change Airplane Mode you must follow the steps below to first pass through the language and time screens.

1. With therapy off, press and hold to the left and right of the display screen simultaneously until the display shows the language and time reset screen.

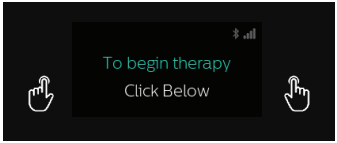

2. After approximately 3 seconds, the screen displays:

   Settings reset

   Hold to start

   Click to cancel
3. Press and hold the Therapy button to start the language and time reset, or click the Therapy button to cancel reset. The device displays the reset or cancelling screens and then displays the Bluetooth setting.
   Note: If you reset language and time, the device will prompt you to set the language and time before the Bluetooth selection screen displays.
4. Press and hold the Therapy button to reset the Bluetooth connections, or click the Therapy button to cancel reset. The device displays the reset or cancelling screens and then displays the Airplane Mode setting.
5. Press and hold the Therapy button to turn Airplane Mode on or off. The device displays the reset or cancelling screens and then exits back to the Therapy off screen.

   Note: Airplane mode will automatically turn off after three days.

4. Pop-up messages and troubleshooting

Device pop-up messages

Device pop-up messages may appear on your device to alert you of a device status update or required action. When the message appears, follow the action or reference the following table for an explanation of the pop-up and any action that should be taken. When “Click to Dismiss” displays with the message, you can click the Therapy button to dismiss and close the pop-up screen.

Alerts and notifications

Condition/Screen text	Description	Possible cause	Action
Blocked inlet	Blocked airway	Blockage at device inlet	Check device air inlet is not obstructed. Check air filter(s) are installed properly; replace if needed.
Low leak	Blocked airway	Blockage at tube or mask	Check tube is not crushed or folded such that air flow is restricted. Check mask is attached properly and without any obstruction.
Humidifier Error	Humidification control is disabled.	There may be a problem with your humidifier. Therapy will run without humidification.	Turn off device and disconnect from power. Visually check that electrical contacts are clear, then reconnect power cord. If alert continues, contact your provider.
Tube Error	Heated tube error (only when heated tube is present)	Heated tube may be overheated or damaged.	Turn off device. Detach heated tube from device, make sure that tube is not covered or obstructed, and then reattach to device. If alert continues, contact your provider.

Condition/Screen text	Description	Possible cause	Action
Humidifier Off	The attached battery does not support humidification.	Use of battery pack for power.	Disconnect the battery pack and use a compatible power supply or use the device without humidification.
Check Power (light blinks continuously)	Indicates an incompatible power supply is attached.	Incorrect power supply.	Switch to a Philips-provided power supply that is capable of supporting therapy. An 80W power supply is required to support humidification.
Low Voltage (light blinks continuously)	Low voltage	Incompatible power supply is attached.	Confirm a compatible Philips Respironics power supply is attached. Switch to compatible power supply if needed. If battery is being used, ensure battery is adequately charged.
Device Update Hold to Confirm Click to Cancel	A new software version is available.	New software update.	Press and hold the therapy button to update the device software. Or Click the therapy button to cancel the update.
SD Error Remove/Reinsert	There was a problem reading your SD card.	Device cannot read the SD card. A problem may exist with the SD card, it was removed during a writing activity, or it was inserted incorrectly.	Click the Therapy button to clear the notification. Remove and reinsert the SD card. If alert continues, contact your provider.

Condition/Screen text	Description	Possible cause	Action
SD Full Contact provider	Your SD card is full.	Your SD card is full.	Remove SD card and replace with a new card, or contact your provider for a new SD card.
SD Removed Reinsert	SD card is not inserted into the device.	Indicates SD card has been removed from therapy device and not reinserted before the start of the current therapy session.	Reinsert the SD card to record therapy data.
Service Required Contact support (light blinks continuously)	Indicates an error which enters device into “Safe State.” This allows power to remain on but airflow is disabled.	Device error.	Disconnect device from power. Reattach power cord to restore power. If the alert continues to occur, contact your home care provider.

Status pop-up messages

Status messages do not require action. The pop-up will automatically time out or you can click the Therapy button to clear the message.

Screen Text	Description
Compliance Achieved	You have reached your therapy compliance goal.
SD Card Activity Do not remove.	SD card read/write underway.
Prescription Updated	Your prescription has been updated.
Prescription Invalid	A prescription or setting update was unsuccessful. Contact your home care provider.
Therapy Auto Off	Your device has automatically turned off due to inactivity.
SpO2 Successful	You have achieved at least 4 hours of therapy and oximetry use.
SpO2 Unsuccessful	Minimum therapy hours not met. Your pulse oximetry recording was unsuccessful.

Troubleshooting

Problem	Why it happened	What to do
Nothing happens when you apply power to the device.	There's no power at the outlet or the device is unplugged.	If you are using AC power, check the outlet and verify that the device is properly plugged in. Make sure there is power available at the outlet. Make sure the AC power cord is connected correctly to the power supply and the power supply cord is securely connected to the device's power inlet. If the problem continues to occur, contact your home care provider. Return both the device and power supply to your provider, so they can determine if the problem is with the device or power supply. If you are using DC power, make sure your DC power cord and battery adapter cable connections are secure. Check your battery. It may need recharged or replaced. If the problem persists, check the DC cord's fuse following the instructions supplied with your DC cord. The fuse may need to be replaced. If the problem still occurs, contact your home care provider.
The airflow does not turn on.	There may be a problem with the blower.	Make sure the device is powered correctly. Press the Therapy button on top of the device to start airflow. If the airflow does not turn on, there may be a problem with your device. Contact your home care provider for assistance.
The device's display is erratic.	The device has been dropped or mishandled, or the device is in an area with high Electromagnetic Interference (EMI) emissions.	Unplug the device. Reapply power to the device. If the problem continues, relocate the device to an area with lower EMI emissions (away from electronic equipment such as cellular phones, cordless phones, computers, TVs, electronic games, hair dryers, etc.). If the problem still occurs, contact your home care provider for assistance.

Problem	Why it happened	What to do
The airflow is much warmer than usual.	The air filters may be dirty. The device may be operating in direct sunlight or near a heater.	Rinse or replace the reusable air filter or replace the disposable ultra-fine filter. The temperature of the air may vary somewhat based on your room temperature. Make sure that the device is properly ventilated. Keep the device away from bedding or curtains that could block the flow of air around the device. Make sure the device is away from direct sunlight and heating equipment. If the problem continues, contact your home care provider.
The water in the humidifier water tank runs out before morning.	Humidifier water tank was not full at start of session. Mask leak is excessively high. The ambient conditions are very dry/cool.	Under most conditions, a full humidifier water tank should last for a typical sleep session if the humidifier tank is filled to the maximum fill line at the beginning of the sleep session. However, many factors impact water consumption, including: your humidifier or heated tube settings, the level of mask leak, and the duration of your sleep session. Make sure that the humidifier water tank is filled to the maximum fill line at the start of your sleep session. Check that your mask is fitted properly, and adjust as needed to reduce mask leak to normal levels.
I hear a leak or whistling sound coming from my therapy device (not related to mask leak).	The therapy device air inlet may be obstructed. The tube is not fully connected. The humidifier seals are not fully seated or are missing.	Check therapy device air inlet is not obstructed, and filters are free of debris and properly inserted. Confirm that the device, humidifier water tank, and tube are connected properly and not leaking. Confirm that the water tank lid seal is present and properly seated.

5. Connectivity

QoS: Wireless Quality of Service (QoS) refers to the necessary level of service and performance needed for the wireless functions of the device. It involves parameters such as reliability of data transmission, effective transfer rate, error rate, and mechanisms to define priority levels for time-critical signals.

Bluetooth® QoS: Bluetooth uses frequency hopping, channel coding, and error correction to address interference and is designed to operate with other devices that occupy the same spectrum. In addition to the measures defined in the Bluetooth standard, the DreamStation 2 radio incorporates other methods to minimize likelihood of QoS problems. These include:

- Data sent between the CPAP and any external devices use an additional checksum verification to ensure that data is correctly received without errors.
- For all Bluetooth applications except pulse oximeter: The CPAP is a portable device and will not always be near the mobile device when the CPAP is ready to transfer data. The mobile device attempts to reconnect until it successfully connects and the data transfer is complete.
- For use with pulse oximeter: The radio receives pulse rate and O_2 level once per second and stores that data along with the time stamp. The data from the pulse oximeter is checked for validity and thrown away if not valid. This data is not displayed locally but is logged, and after a minimum of 4 hours of data is collected it is sent to the remote server. If the CPAP is not able to get 4 hours of good data it alerts the patient, and the patient will need to use it again the next night. The data is not used to diagnose the patient's condition, and will continue to reconnect to the pulse oximeter until a connection is achieved.

Cellular QoS

The Cellular modem is designed for use with select Philips Respironics therapy devices. It automatically transfers data between the DreamStation 2 device and Philips Respironics proprietary compliance software. The DreamStation 2 modem incorporates various methods to minimize likelihood of QoS problems. These include:

- No real time data monitoring is used in this application. If the data transfer is unsuccessful, the modem attempts to reconnect until it successfully connects and the data transfer is complete.
- Data sent between the CPAP and any external devices uses an additional checksum verification to ensure that data is correctly received without errors.

For information on Bluetooth use and pairing, see the "Bluetooth wireless technology" and "Pairing your therapy device to your Bluetooth-enabled mobile device" sections of this manual.

6. Accessories

There are several optional accessories available for your DreamStation 2 device. For a full list of accessories that can be used with this device, see the DreamStation 2 accessory list at www.philips.com/IFU. Contact your home care service provider for additional information on the available accessories. When using optional accessories, always follow the instructions enclosed with the accessories.

SD card

The device may come with an SD card inserted in the SD card slot behind the water tank. The SD card stores information for the home care provider. Your home care provider may ask you to periodically remove the SD card and send it to them for evaluation.

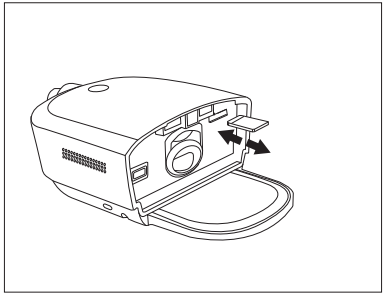

Updating software using an SD card

You can update the device software using an SD card. The software update must be done when the therapy is off.

1. Connect the device to power.
2. Insert an SD card with the new software version into the device. After approximately 15 to 20 seconds, a pop-up screen appears displaying:

Device Update

Hold to Confirm

Click to Cancel

3. Press and hold the Therapy button for at least 3 seconds to continue with the software upgrade. To cancel the software upgrade, click the Therapy button.
4. When the update begins, the screen displays “Software Update Active” and the therapy button ring flashes. The screen will then appear black or may display a progress bar until the update is complete.
5. The device User Interface (UI) will restart when the upgrade is complete. Remove the SD card.
6. If an error occurs, contact Philips Respironics for a new SD card.

Oximeter

The DreamStation 2 device can pair to a Nonin BT Pulse Oximeter, using Bluetooth, for measuring %SpO2 and pulse rate.

To use a pulse oximeter with your therapy device, follow these steps.

1. Follow the setup instructions provided with your pulse oximeter and finger sensor.
2. Attach the finger sensor to your forefinger.
3. Press the Therapy button on your device to begin therapy.
4. Once the device detects a good connection with the pulse oximeter, both the Bluetooth symbol and “SpO_2” will display on the top of the display screen.

Note: It may take up to 30 seconds for the device to recognize the pulse oximeter.

When you have achieved at least 4 hours of therapy and oximetry use, a “SpO2 Successful” pop-up message will display. If you do not reach the minimum therapy hours, a “SpO2 Unsuccessful” message will display.

Roll stand

There is a roll stand available for use with your DreamStation 2 device. Please see the instructions included with your roll stand for more information.

Supplemental oxygen

Oxygen can be added to the patient circuit. Please note the warnings listed below when using oxygen with the device.

Warnings

- **When using oxygen with this system, the oxygen supply must comply with local regulations for medical oxygen.**
- **Oxygen supports combustion. Oxygen should not be used while smoking or in the presence of an open flame.**
- Do not use the device in the presence of a flammable anaesthetic mixture in combination with oxygen or air, or in the presence of nitrous oxide..
- If supplemental oxygen is added at the exit of the flow generator or humidifier, a Philips Respironics Pressure Valve must be placed in-line with the patient circuit between the device and the oxygen source. The pressure valve helps prevent the backflow of oxygen from the patient circuit into the device when the unit is off. Failure to use the pressure valve could result in a fire hazard.
- **When using oxygen with this system, turn the device on before turning on the oxygen. Turn the oxygen off before turning the device off. This will prevent oxygen accumulation in the device.**
- **Do not connect the device to an unregulated or high pressure oxygen** source.

DC power

A Philips Respironics DC power cord can be used to operate this device in a stationary recreational vehicle, boat, or motor home. In addition, a Philips Respironics DC battery adapter cable, when used with a DC power cord, allows the device to be operated from a 12 VDC free-standing battery.

Warning: Periodically inspect electrical cords and cables for damage or signs of wear. Discontinue use and replace if damaged.

Cautions

- Always ensure that the DC power cord securely fits into your therapy device prior to use. Contact your home care provider or Philips Respironics to determine if you have the appropriate DC cord for your specific therapy device.
- When DC power is obtained from a vehicle battery, the device should not be used while the vehicle's engine is running. Damage to the device may occur.
- Only use a Philips Respironics DC Power Cord and Battery Adapter Cable. Use of any other system may cause damage to the device.

Refer to the instructions supplied with the DC power cord and adapter cable for information on how to operate the device using DC power.

Carrying case and airline travel

When traveling, the carrying case is for carry-on luggage only. The carrying case will not protect the system if it is put through checked baggage. Do not travel with water in the water tank.

The device is suitable for use on airlines when the device is operating from an AC or DC power source.

For your convenience at security stations, there is a symbol on the bottom of the device indicating that it is medical equipment and is suitable for airline use. It may be helpful to bring this manual along with you to help security personnel understand the device.

If you are traveling to a country with a line voltage different than the one you are currently using, a different power cord or an international plug adaptor may be required to make your power cord compatible with the power outlets of the country to which you are traveling. Contact your home care provider for additional information.

7. Cleaning, disinfection, and care

Warning: Allow the humidifier heater plate and water to cool down for approximately 15 minutes before removing the water tank. A burn may result from: touching the heater plate, coming in contact with the heated water, or touching the tank base.

Note: Remove all protective film prior to cleaning.

Air pathway contamination

If the air pathway becomes contaminated, contact your home care service provider for maintenance.

Home cleaning: device exterior, heater plate, and humidifier air inlet/outlet seal

Clean the device exterior surface weekly (Maximum of 260 cleaning cycles over the life of the device).

Clean the air inlet/outlet seal daily (Maximum of 366 cleaning cycles).

1. To avoid electrical shock, make sure that the device is disconnected from all outlets and power sources. Remove any cables attached to the device or battery pack.
2. Remove the humidifier tank from the device.
3. Use a lint-free cloth dampened (not dripping) with a liquid soap solution (5 ml of liquid dish soap per 3.8 liters of warm potable water) to clean the exterior of the device, heater plate, and humidifier air inlet seal for one minute.
4. Work the cloth into the areas around the therapy button, humidifier air inlet/outlet seal, and any other areas where soil may be difficult to remove. Ensure that you remove all visible soil.
5. Wipe the parts with a lint-free cloth dampened (not dripping) with potable water for one minute to remove all detergent residue.
6. Inspect the device for cleanliness. If necessary, repeat the cleaning steps until all surfaces are visibly clean.
7. Allow the device to dry completely before reconnecting it to a power source.
8. Inspect the device and all circuit parts (filter, tube, and mask) for damage, such as cracks, tears, or broken pieces. Ensure that air inlet/outlet seal is properly installed and not dislodged. Replace any damaged parts.

Home cleaning: humidifier water tank (lid, water tank base, and water tank seal)

Clean the humidifier water tank before first use. Hand wash daily (Maximum of 366 cleaning cycles).

The humidifier water tank can also be washed in the top rack of a dishwasher weekly (Maximum of 52 cleaning cycles).

1. Press the therapy button to stop the airflow, and allow the heater plate and water to cool.
2. Remove the water tank from the device and remove the lid and water tank seal from the tank base.
3. Wash the humidifier water tank (lid, water tank base, and water tank seal) in the dishwasher (top shelf only) or in a solution of warm potable water and a mild liquid dishwashing detergent (5 ml of liquid dish soap per 3.8 liters of warm water) using a soft bristle brush for one minute to remove adhering substances.

   Note: Pay close attention to all corners and crevices.
4. Fully immerse and rinse each item separately with potable water for one minute and agitate vigorously.
5. Allow all parts to air dry.
6. Inspect the humidifier water tank for damage. If any parts show signs of wear or damage, contact your home care provider for a replacement.
7. Re-install the water tank seal. To install, insert the seal into the back of the tank base and then press the seal down until it is fully seated into the water tank base.

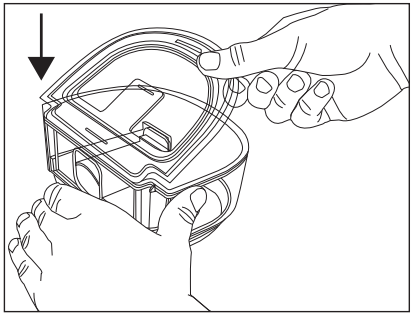

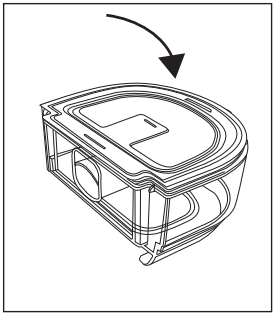

8. Before reinstalling the humidifier water tank, fill it with distilled water no higher than the maximum fill line.

Home disinfection: humidifier water tank (lid, water tank base, and water tank seal)

Disinfect the humidifier water tank weekly (Maximum of 52 disinfection cycles).

Requirements:

- 70% isopropyl alcohol (70% solution of isopropyl alcohol in water)

1. Before disinfecting the device, be sure that it has been cleaned as instructed in the previous “Home cleaning: humidifier water tank” section of device user manual.
2. Immerse the humidifier tank (lid, water tank base, and water tank seal) in 70% isopropyl alcohol for 5 minutes.
3. Rinse all parts of the humidifier tank in potable water for at least 1 minute.
4. Allow all parts to air dry.
5. Inspect the humidifier water tank for damage. If any parts show signs of wear or damage, contact your home care provider for a replacement.

Home cleaning: tubing

Hand wash the tubing, mask adapter (if included), and connectors (if included) before first use and weekly (Maximum of 26 cleaning cycles). Discard and replace the tubing every 6 months.

1. Disconnect the flexible tubing from the device.
2. Gently wash the tubing, including any adapters or connectors, in a solution of warm potable water and a mild liquid dishwashing detergent (5 ml of liquid dish soap per 3.8 liters of warm water) to adequately remove adhering substances from the tube, adapters, and connectors. Gently agitate the tubing by hand for one minute so that the inner surface of the tube is cleaned.
3. Rinse thoroughly to remove all soap residue from the tube, adapters, and connectors with potable water for one minute and allow to air dry. Make sure all parts are dry before next use.
4. Visually inspect the tubing for cleanliness. Repeat the cleaning if not visually clean.
5. Inspect the tubing for damage or wear (cracking, tears, punctures, etc.). Discard and replace if necessary.

Caring for the filters

Notes

- Only Philips supplied filters should be used as replacement filters.
- Replace the disposable, blue ultra-fine filter if it is damaged or has accumulated debris.

In the home environment, the disposable, ultra-fine filter should be replaced after 30 nights of use, or sooner, if it appears clogged. DO NOT rinse the ultra-fine filter.

Under normal usage in the home environment, you should rinse the grey reusable filter at least once every two weeks and replace it with a new one every six months (Maximum of 30 rinse cycles).

1. If the device is operating, press the Therapy button to stop the airflow. Unplug the power cord from the wall outlet.
2. Remove the water tank to access the filter area, then remove the filter from the device. Refer to the “Install/replace the air filters” section earlier in this manual.
3. Take the reusable filter to a sink and run warm tap water through the white middle portion of the filter to rinse away any debris.
4. Shake the filter to remove as much water as possible.
5. Allow the filter to air dry completely before reinstalling it. If the filter is damaged, replace it.
6. Reinstall the filter into the filter access area on the device.

Service

The device does not require routine servicing.

Warning: If you notice any unexplained changes in the performance of this device, if it is making unusual or harsh sounds, if it has been dropped or mishandled, if water is spilled into the enclosure, or if the enclosure is broken, disconnect the power cord and discontinue use. Contact your home care provider.

8. Technical specifications

Environmental

Operating Temperature	Device: 5° to 35°C (41° to 95°F)
Storage Temperature	-20° to 60°C (-4° to 140°F)
Relative Humidity (operating & storage)	15 to 95% (non-condensing)
Atmospheric Pressure:	Device: 101 to 77 kPa (0 - 2286 m / 0 - 7500 ft)

Physical

Dimensions	273.81 mm L x 158.5 mm W x 84.83 mm H (10.78 in L x 6.24 in W x 3.34 in H)
Weight (empty water tank without power supply)	1040 g (2.29 lbs)

Service life

The expected service life of the DreamStation 2 device is five (5) years.

The expected service life of the DreamStation 2 humidifier water tank is one (1) year.

The expected service life of the DreamStation 2 humidifier air inlet/outlet seal is one (1) year.

Standards compliance

This device is designed to conform to the following standards:

- IEC 60601-1 General Requirements for Basic Safety and Essential Performance of Medical Electrical Equipment
- IEC 60601-1-11 General Requirements for Basic Safety and Essential Performance in the Home Healthcare Environment
- IEC 60601-1-6 General Requirements for Safety - Usability
- IEC 62366-1 Application of Usability Engineering in Medical Devices
- IEC 62304 Medical Device Software – Software Life-cycle Processes
- ISO 80601-2-70 Sleep Apnoea Breathing Therapy Equipment
- ISO 80601-2-74 Respiratory Humidifying Equipment
- IEC 60601-1-2 Electromagnetic Disturbances – Requirements and Tests
- Information on REACH substances contained in Philips products can be found on www.philips.com/REACH

IEC 60601-1 classification

Type of Protection Against Electric Shock	Class II Equipment
Degree of Protection Against Electric Shock	Type BF Applied Part
Degree of Protection Against Ingress of Water	Device: Drip Proof, IP22 First characteristic numeral - 2 - Protection against ingress of solid foreign objects ≥ 12.5 mm diameter. Explanation: Protected against access to hazardous parts with a finger and protected against solid foreign objects of 12.5 mm diameter and greater. Second characteristic numeral - 2 - Protection against ingress of water with harmful effects dripping (15° tilted). Explanation: Protected against vertically falling water drops when enclosure tilted up to 15°.
Mode of Operation	Continuous

Electrical	AC Power Consumption: 100–240 VAC, 50/60 Hz, 2.0-1.0 A
Water capacity	325 ml (11 oz.) at recommended water level
Heater plate	Max Temperature: 68°C (154°F)
Humidity	$Humidity_{min}$ Output: ≥ 12 mg H_2O/L Measured at expected leak across therapy pressures , 17 °C–35°C, 15% RH for all compatible tubes.
Maximum delivered gas temperature	<43°C (109.4°F)

Declared dual-number noise emissions values (in accordance with ISO 4871)

Tube Size	Sound Pressure Level	Uncertainty	Sound Power Level	Uncertainty
15 and 22 (mm) tubing type	27 dB(A)	2 dB	35 dB(A)	2 dB
12 (mm) tubing type	27 dB(A)	2 dB	35 dB(A)	2 dB

Pressure accuracy

Pressure Increments: 4-20 cmH_2O (in 0.5 cmH_2O increments)

Maximum static and dynamic pressure accuracy, according to ISO 80601-2-70:2015:

Tube Type	Static	Dynamic 4 to 20 cmH_2O
15 and 22 (mm) tubing type	± 0.5 cmH_2O	± 1.0 cmH_2O
12 (mm) tubing type	± 1.0 cmH_2O	± 2.0 cmH_2O

Static pressure accuracy has a measurement uncertainty of 1.31%.
Dynamic pressure accuracy has a measurement uncertainty of 2.70%.

Maximum flow rate (typical)

Tube Type	Flow	Test Pressure (cmH_2O)				
		4	8	12	16	20
12 (mm) tubing type (heated or non-heated)	Average flow at the patient connection port (l/min)	100	102	102	98	94
	Flow rate range due to uncertainty (l/min)	83 to 118	86 to 119	89 to 115	86 to 109	85 to 103
15 (mm) tubing type (heated or non-heated)	Average flow at the patient connection port (l/min)	111	112	114	113	109
	Flow rate range due to uncertainty (l/min)	97 to 125	97 to 127	100 to 128	103 to 124	102 to 115
22 (mm) tubing type	Average flow at the patient connection port (l/min)	129	133	129	125	116
	Flow rate range due to uncertainty (l/min)	115 to 143	111 to 155	108 to 149	111 to 139	108 to 124

ISO 80601-2-70 Pneumatic Diagram

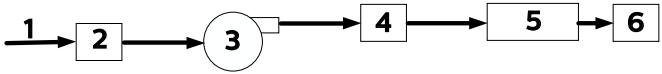

#	Feature
1	Air
2	Filter & air inlet
3	Blower
4	Air outlet
5	6 ft. tubing
6	Mask

Wireless notices

- The Bluetooth® word mark and logos are registered trademarks owned by Bluetooth SIG, Inc. and any use of such marks by Philips Respironics is under license. Other trademarks and trade names are those of their respective owners.
- The DreamStation 2 device is capable of transmitting data between the therapy device and a mobile device. This connection between the therapy device and a mobile device is encrypted.
- A small portion of the firmware that performs data encryption on the DreamStation 2 device is being utilized under the Apache 2.0 and Mozilla 2.0 licenses. These licenses are available at:

  www.apache.org/licenses/LICENSE-2.0 and https://www.mozilla.org/en-US/MPL/2.0/
- This product meets RF exposure requirements when it is positioned with a separation distance of at least 20 cm away from the body.
- This device is a certified Bluetooth radio device with: FCC ID (USA): THO1141623
- Use of non-original manufacturer-approved accessories may violate your local RF exposure guidelines and should be avoided.
- This device complies with part 15 of the FCC Rules. Operation is subject to the following two conditions: (1) This device may not cause harmful interference, and (2) this device must accept any interference received, including interference that may cause undesired operation. This equipment has been tested and found to comply with the limits for a Class B digital device, pursuant to Part 15 of the FCC Rules. These limits are designed to provide reasonable protection against harmful interference in a residential installation. This equipment generates, uses, and can radiate radio frequency energy and, if not installed and used in accordance with the instructions, may cause harmful interference to radio communications. However, there is no guarantee that interference will not occur in a particular installation. If this equipment does cause harmful interference to radio, TV reception, or other devices which can be determined by turning the equipment on and off, the user is encouraged to try to correct the interference by one or more of the following measures:
  - Reorient or relocate the receiving antenna (on the radio, TV, or other device).
  - Increase the separation between the equipment and receiver.
  - Connect the equipment into an outlet on a circuit different from that to which the receiver is connected.
  - Consult the dealer of the device for help.
- Hereby, Respironics, Inc. declares that the DreamStation 2 family of products are in compliance with Directive 2014/53/EU. The full text of the EU declaration of conformity is available at the following internet address:
  https://www.usa.philips.com/healthcare/about/support/resource-center

Radio Specifications

Cellular

For devices that contain a 4G symbol on the bottom of device:

Operating Frequency Range	4G LTE: 700, 800, 850, 900, 1700, 1800, 1900, 2100, 2300, 2600 MHz 3G UMTS: 850, 900, 1900, 2100 MHz 2G GSM: 850, 900, 1800, 1900 MHz
Maximum Output Power	4G LTE: 27 dBm 3G UMTS: 28 dBm 2G GSM: 37 dBm
Modulation	4G LTE: QPSK, 16QAM, 64QAM 3G UMTS: QPSK, 16QAM 2G GSM: GMSK, 8-PSK

For devices that do not contain a 4G symbol on the bottom of device:

Operating Frequency Range	3G UMTS: 800, 850, 900, 1900, 2100 MHz 2G GSM: 850, 900, 1800, 1900 MHz
Maximum Output Power	3G UMTS: 24 dBm 2G GSM: 33 dBm
Modulation	3G UMTS: QPSK 2G GSM: GMSK, 8-PSK

Bluetooth

Operating Frequency Range	2.4-2.4835 GHz
Maximum Output Power	3 dBm
Modulation	GFSK
Bandwidth:	2 MHz

Intake Port Filters

Pollen Filter	100% Polyester 88% Efficient @ 7-10 micron size
Ultra-fine Filter	Blended Synthetic Fiber 95% Efficient @ 0.5-0.7 micron size

Heated Tubing Specifications

Maximum Recommended Pressure	20 cmH_2O
Inner Diameter	15 mm (HT15) 12 mm (HT12)
Length	1.83 m (6 ft.)
Heated Tubing Temperature Range	16° to 30° C (60° to 86° F)
Heated Tubing Temperature Cut-out	≤ 41° C (≤ 106° F)
Material	Flexible plastic and electrical components

Disposal

Dispose of this device in accordance with local collections and recycling regulations. For more information, visit www.philips.com/recycling.

9. EMC information

Your unit has been designed to meet EMC standards throughout its Service Life without additional maintenance. There is always an opportunity to relocate your DreamStation 2 Therapy Device within an environment that contains other devices with their own unknown EMC behavior. If you believe your unit is affected by locating it closer to another device, simply separate the devices to remove the condition.

Pressure and Flow Accuracy

If you suspect that the pressure and/or flow rate accuracy is affected by EMC interference remove power and relocate the device to another area. If performance continues to be affected discontinue use and contact your home care provider.

SpO_2 and Pulse Rate Accuracy

The DreamStation 2 therapy device is designed to capture the SpO_2 and pulse rate oximetry data within the accuracy specification described in the sensor manufacturer's instructions for use. When 4 hours of successful oximetry data have been achieved the device indicates this to the user by displaying "SpO2 Successful". If you suspect that your unit is affected by EMC interference, remove power and relocate the device to another area. If performance continues to be affected discontinue use and contact your home care provider.

Guidance and Manufacturer's Declaration - Electromagnetic Emissions – This device is intended for use in the electromagnetic environment specified below. The user of this device should make sure it is used in such an environment.

Emissions Test	Compliance	Electromagnetic Environment - Guidance
RF radiated emissions CISPR 11	Group 1 Class B	The device uses RF energy only for its internal function. Therefore, its RF emissions are very low and are not likely to cause any interference in nearby electronic equipment.
RF conducted emissions CISPR 11	Group 1 Class B	The device is suitable for use in all establishments, including domestic establishments and those directly connected to the public low-voltage power supply network.
Harmonic emissions IEC 61000-3-2 220-240VAC 50/60Hz (No standard test requirement for this device at other voltage/ frequency ranges)	Class A 220-240VAC 50/60Hz	
Voltage fluctuations/flicker emissions IEC 61000-3-3 220-250VAC 50Hz (No standard test requirement for this device at other voltage/ frequency ranges)	Complies 220-250VAC 50Hz	
Emission of Radio Frequency Energy RTCA/DO-160G Section 21	Category M	This device is suitable for use onboard commercial airplanes inside passenger cabin.

Guidance and Manufacturer's Declaration - Electromagnetic Immunity – This device is intended for use in the electromagnetic environment specified below. The user of this device should make sure it is used in such an environment.

Immunity Test	IEC 60601 Test Level	Compliance Level	Electromagnetic Environment - Guidance
Electrostatic Discharge (ESD) IEC 61000-4-2	±8 kV contact ±2 kV, ±4 kV, ±8 kV, & ±15 kV air discharges	±8 kV contact ±2 kV, ±4 kV, ±8 kV, & ±15 kV air discharges	Floors should be wood, concrete or ceramic tile. If floors are covered with synthetic material, the relative humidity should be at least 35%.
Electrical fast Transient/ burst IEC 61000-4-4	±2 kV for power supply lines, 100 kHz repetition rate	±2 kV for power supply lines, 100 kHz repetition rate	Mains power quality should be that of a typical home or hospital environment.
	±1 kV for input-output lines; 100 kHz repetition rate	N/A- Device does not have user I/O lines that are longer than 3m in length.	
Surge IEC 61000-4-5	line-to-line ±0.5 kV & ±1 kV	line-to-line ±0.5 kV & ±1 kV	Mains power quality should be that of a typical home or hospital environment.
	line-to-ground ±0.5 kV, ±1 kV, & ±2 kV	N/A: Device is Class 2 and does not have earth connection.	

Immunity Test	IEC 60601 Test Level	Compliance Level	Electromagnetic Environment - Guidance
Voltage dips, short interruptions and voltage variations on power supply input lines IEC 61000-4-11	<5% U_T (>95% dip in U_T) for 0.5 cycle at 45 degree increments <5% UT (>95% dip in UT) for 1 cycle 70% UT (30% dip in UT) for 0.5 seconds <5% UT (>95% dip in UT) for 5 seconds	<5% U_T (>95% dip in U_T) for 0.5 cycle at 45 degree increments <5% UT (>95% dip in UT) for 1 cycle 70% UT (30% dip in UT) for 0.5 seconds <5% UT (>95% dip in UT) for 5 seconds	Mains power quality should be that of a typical home or hospital environment. Upon power interruption, the device may reboot. If the user of the device requires continued operation during power mains interruptions, it is recommended that the device be powered from an uninterruptible power supply or a battery.
Power frequency (50/60 Hz) magnetic fields IEC 61000-4-8	30 A/m	30 A/m	Power frequency magnetic fields should be at levels characteristic of a typical location in a typical hospital or home environment.
Proximity magnetic fields IEC 61000-4-39	RFID Reader frequencies as specified in clause 8.11 of IEC 60601-1-2:2020: 30 kHz at 8 A/m 134.2 kHz at 65 A/m 13.56 MHz at 7.5 A/m	RFID Reader frequencies as specified in clause 8.11 of IEC 60601-1-2:2020: 30 kHz at 8 A/m 134.2 kHz at 65 A/m 13.56 MHz at 7.5 A/m	Magnetic fields should be at levels characteristic of a typical location in a typical hospital or home environment.
NOTE: U_T is the a.c. mains voltage prior to application of the test level.			

Guidance and Manufacturer's Declaration - Electromagnetic Immunity – This device is intended for use in the electromagnetic environment specified below. The user of this device should make sure it is used in such an environment.

Immunity Test	IEC 60601 Test Level	Compliance Level	Electromagnetic Environment - Guidance
Conducted RF IEC 61000-4-6	3 Vrms 150 kHz to 80 MHz 6 Vrms Amateur Radio & ISM Bands between 150 kHz and 80 MHz	3 Vrms 150 kHz to 80 MHz 6 Vrms Amateur Radio & ISM Bands between 150 kHz and 80 MHz	Portable and mobile RF communications equipment should be used no closer to any part of the device, including cables, than the recommended 30 cm (12 inches) separation distance. Interference may occur in the vicinity of equipment marked with the following symbol:
Radiated RF IEC 61000-4-3	10 V/m 80 MHz to 2.7 GHz Telecommunication frequencies as specified in clause 8.10 of IEC 60601-1-2:2020: 450, 810, 870, 930, 1720, 1845, 1970, and 2450 MHz at 28 V/m 385 MHz at 27 V/m 710, 745, 780, 5240, 5500, and 5785 MHz at 9 V/m	10 V/m 80 MHz to 2.7 GHz Telecommunication frequencies as specified in clause 8.10 of IEC 60601-1-2:2020: 450, 810, 870, 930, 1720, 1845, 1970, and 2450 MHz at 28 V/m 385 MHz at 27 V/m 710, 745, 780, 5240, 5500, and 5785 MHz at 9 V/m	

Other Standard Immunity Test	Test Level	Compliance Level	Electromagnetic Environment - Guidance
Immunity to RFID Readers AIM 7351731, Rev 2.00:2017	134.2 kHz at 65 A/m 13.56 MHz at 12 A/m 433 MHz at 3 V/m 860 MHz to 960 MHz at 54 V/m 2450 MHz at 54 V/m	134.2 kHz at 65 A/m 13.56 MHz at 12 A/m 433 MHz at 3 V/m 860 MHz to 960 MHz at 54 V/m 2450 MHz at 54 V/m	Portable and mobile RF communications equipment should be used no closer to any part of the device, including cables, than the recommended 30 cm (12 inches) separation distance. Interference may occur in the vicinity of equipment marked with the following symbol:

If you plan on using your DreamStation 2 on an airplane, please detach this letter and bring it with you.

PHILIPS

FAA Compliance

To Whom It May Concern:

The following Philips DreamStation 2 devices are in compliance with commercial airline EMI/RFI requirements:

- DreamStation 2 CPAP
- DreamStation 2 Auto CPAP

Philips has designed and tested the identified devices for compliance with section 21, Category M, RTCA DO-160 EMI/RFI requirements as specified in the Code of Federal Regulations 14 CFR 382 *"Nondiscrimination on the Basis of Disability in Air Travel; Final Rule"*.

In accordance with these requirements, the aforementioned components may be used onboard an aircraft without further testing by the carrier.

If you have any other questions regarding our products, please feel free to call the Philips Respironics Customer Services department 1-724-387-4000. You can also use the following address:

Respironics Inc.
1001 Murry Ridge Lane
Murrysville, PA 15668

www.philips.com/respironics

Limited Warranty

Respironics, Inc., a Philips company (“Philips Respironics”) provides this non-transferable, limited warranty for DreamStation 2 (“Product”) to the customer who originally purchased the Product directly from Philips Respironics.

What this Warranty Covers: Philips Respironics warrants each new Product will be free from defects in materials and workmanship and will perform in accordance with the Product specifications under normal and proper use and maintenance in accordance with applicable instructions, subject to the exclusions below.

How Long does this Warranty Last: Two (2) years from the longer of the date of shipment to the purchaser or date of setup by purchaser for the end user, except:

The warranty period for accessories, replacement parts, and disposables including, but not limited to, tubing, filters, carrying case, and power cord is 90 days from the date of shipment to the original purchaser.

What this Warranty does not cover: This warranty does not apply to any software included with the Product as the software warranty is included in the software license. This warranty does not cover damage or injury whether to the Products, personal property, or persons caused by accident, misuse, abuse, Acts of God, water ingress, unapproved ozone cleaning and disinfection methods, other unapproved cleaning and disinfection methods, repair or alteration by anyone other than Philips Respironics or its authorized service center, failure to operate in accordance with the terms of the operating manual and instructions, lack of reasonable care, the discontinuance of a network (e.g. 2G, 3G, etc.) by a carrier (e.g. ATT, Verizon, etc.), or other defects not related to material or workmanship. This warranty is not transferable. If Philips Respironics finds that a Product returned for service or the issue raised is not covered under this limited warranty, Philips Respironics may charge an evaluation fee and return shipping.

What Philips Respironics will do: If a Product does not meet the warranty above in the first 90 days after the original shipment date, Philips Respironics will replace the device with a new Product. Thereafter, if a Product fails to conform to the warranties set forth above during the applicable warranty period, Philips Respironics will repair or replace the Product or refund the original purchase price, in Philips Respironics sole discretion. Philips Respironics may use new or remanufactured assemblies, components, and parts in repair and new or recertified refurbished devices for replacement. The balance of the original warranty period will apply to any Product or component of a Product repaired or replaced under this warranty.

Warranty Disclaimer; Limitation of Liability: EXCEPT AS SET FORTH IN THIS LIMITED WARRANTY, PHILIPS RESPIRONICS MAKES NO WARRANTIES, EXPRESSED OR IMPLIED, STATUTORY OR OTHERWISE, REGARDING THE PRODUCT OR ITS QUALITY OR PERFORMANCE. PHILIPS RESPIRONICS SPECIFICALLY DISCLAIMS THE IMPLIED WARRANTY OF MERCHANTABILITY AND THE IMPLIED WARRANTY OF FITNESS FOR A PARTICULAR PURPOSE. IN NO EVENT WILL PHILIPS RESPIRONICS MAXIMUM LIABILITY UNDER THESE WARRANTIES EXCEED THE ORIGINAL PURCHASE PRICE OR WILL PHILIPS RESPIRONICS BE LIABLE FOR ANY ECONOMIC LOSS, LOSS OF PROFITS, OVERHEAD, OR SPECIAL, INCIDENTAL, OR CONSEQUENTIAL DAMAGES. Repair, replacement, or return of purchase price by Philips Respironics is the original purchaser's sole and exclusive remedy under this warranty.

This warranty gives you specific legal rights, and you may also have other rights that vary from state to state. Some states do not allow the exclusion or limitation of incidental or consequential damages, so the above exclusion and limitations may not apply to you.

How to get warranty support: Patients contact your local authorized Philips Respironics dealer and dealers contact Respironics, Inc. at:

1001 Murry Ridge Lane

Murrysville, Pennsylvania 15668-8550

+1-724-387-4000

REF 1143534

Respironics Inc.
1001 Murry Ridge Lane
Murrysville, PA 15668 USA

EC REP Respironics Deutschland GmbH & Co. KG
Gewerbestrasse 17
82211 Herrsching, Germany

CE
0123

1143534 R04
ZL 2025-04-28
en-intl