

PHILIPS

Instructions for Use

English

4523 001 01901

Philips Azurion

Release 1.2

Contents

1 Introduction **15**

1.1 About These Instructions for Use 15

1.2 Electronic Instructions for Use 15

1.2.1 Searching the Electronic Instructions for Use 15

1.3 Intended Use of the System 16

1.4 Compatibility 16

1.5 Contraindications 17

1.6 Training 17

1.7 Help and Guidance 17

2 Safety **18**

2.1 Emergency Procedures 18

2.1.1 Clinical Emergency 18

2.1.2 Cardiopulmonary Resuscitation 18

2.1.3 Emergency Stop 19

2.2 Electrical Safety 19

2.3 Mechanical Safety 20

2.4 Explosion Safety 21

2.5 Fire Safety 21

2.6 Electromagnetic Compatibility 21

2.7 Radiation Safety 22

2.7.1 Pediatric Radiation Guidelines 24

2.8 Hazardous Substances 25

3 About the System **27**

3.1 Equipment in the Examination Room 27

3.1.1 Stand 28

3.1.2 FlexVision (Option) 29

3.1.3 FlexMove (Option) 29

3.1.4 Collision Prevention (BodyGuard) 29

3.1.5 Collision Prevention Override 31

3.1.6 Intelligent Collision Protection 32

3.1.7 Patient Table 33

3.1.8 Control Module 34

3.1.9 Touch Screen Module 35

3.1.10 Monitor Configuration 35

3.1.11 Foot Switch 37
3.1.12 Hand Switches 39
3.1.13 Viewpad 40
3.1.14 Mouse and Mouse Table (Option) 41
3.1.15 Sterile Covers 41
3.2 Equipment in the Control Room 41
3.2.1 Review Module 42
3.2.2 Touch Screen Module 43
3.2.3 FlexSpot (Option) 44
3.2.4 Additional FlexSpot (Option) 44

4 Starting and Stopping the System 45
4.1 Starting the System 45
4.1.1 Accessing the System in an Emergency 46
4.1.2 Switching On Only the Monitors (Option) 46
4.2 Restarting the System 46
4.3 Mains Power Failure 47
4.3.1 Uninterruptible Power Supply (Option) 47
4.4 Restarting after Emergency Power Off 48
4.5 Stopping the System 48

5 Preparing a Patient Study 49
5.1 Patient Database 49
5.2 ProcedureCards 50
5.3 Scheduling a Study from the Hospital Worklist 51
5.4 Scheduling a Study Manually 52
5.5 Adding a Study 52
5.6 Editing a Scheduled Study 53
5.7 Checking the Available Disk Storage Space 53
5.8 Starting a Study 54
5.9 Positioning the Patient on the Table 54
5.9.1 Using Patient Straps 55
5.9.2 Changing the Patient Orientation 57
5.10 Preparing the System 58
5.10.1 Safety Information 58
5.10.2 Positioning the C-arm 59
5.10.3 FlexMove 60
5.10.4 Control Modules 60

5.10.5 Positioning the Monitor Ceiling Suspension 62
5.10.6 Positioning the Table 63
5.10.7 Using Radiation Shields 67
5.10.8 Using Sterile Covers 70
5.11 Using an OR Table 71
5.11.1 Maquet Operating Table 72
5.11.2 Trumpf Operating Table 73
5.11.3 Fitting Sterile and Disposable Covers 76

6 Performing Procedures 78
6.1 General Acquisition Workflow 78
6.2 Enabling X-ray 79
6.3 X-ray On Indicators 79
6.3.1 Audible Signals 80
6.4 Acquiring Images 81
6.4.1 System Readiness 81
6.4.2 Acquiring Fluoroscopy Images 82
6.4.3 Using Shutters and Wedges 85
6.4.4 Acquiring Exposure Images 89
6.4.5 Zero Dose Positioning 90
6.5 Acquiring Images in an Emergency 90
6.6 Locking and Unlocking C-arm and Table Movements 92
6.7 Isocentering 92
6.7.1 Recalling the Isocenter Position 93
6.8 Image Orientation 94
6.9 Selecting a Different Preset for FlexVision 94
6.9.1 Saving a Modified Preset for FlexVision 95
6.9.2 Using the Screen Saver on FlexVision 96
6.10 Using Switchable Monitors 96
6.11 Injector Coupling 97
6.11.1 Uncoupled Operation 98
6.11.2 Coupled Operation 98
6.12 Multiphase Acquisition 99
6.12.1 Changing Multiphase Acquisition Settings 99
6.13 Bolus Chase 100
6.13.1 Acquiring a Contrast Run 100
6.13.2 Acquiring a Mask Run (Optional) 102

6.14 Roadmap Pro 103
6.14.1 Using Roadmap Pro 103
6.14.2 Using SmartMask 104
6.15 ECG Triggering 104
6.16 Rotation Scans 105
6.16.1 Performing a Fixed Rotational Scan 106
6.16.2 Performing a Free Rotational Scan 106
6.16.3 XperCT 107
6.16.4 XperCT Dual 109
6.16.5 CardiacSwing 110
6.17 Electrophysiology Procedures 115
6.18 Previewing Series and Images for Automatic Archiving 115
6.19 Ending a Study 116
6.20 Dose Reports 117
6.20.1 Viewing a Secondary Capture Dose Report 117
6.20.2 Printing a Secondary Capture Dose Report 117

7 Reviewing 119

7.1 Instant Parallel Working 119
7.2 Reviewing a Series using the Review Window 119
7.3 Reviewing a Series using the Touch Screen Module 120
7.4 Using the Interventional Room Pointer 122
7.5 Protecting and Unprotecting Studies 122
7.6 Reviewing Historical Data for a Scheduled Patient 123
7.7 Importing Studies or Series for Review 124
7.7.1 Importing Studies or Series from a Network Location 124
7.7.2 Importing Studies and Series from USB Device, CD, or DVD 124
7.8 Bolus Chase Reconstruction 125
7.8.1 Tasks 126
7.8.2 Reconstruction 126
7.8.3 Processing 129
7.9 Resolving a Patient Mix 130

8 Processing 131

8.1 Zooming 132
8.2 Panning 132
8.3 Adjusting Contrast and Brightness 133
8.4 Enhancing Edges in Images 134

8.5 Inverting Images 135
8.6 Adding Annotations 135
8.6.1 Adding a Text Annotation 135
8.6.2 Adding an Arrow 136
8.6.3 Adding an Ellipse 136
8.6.4 Adding a Rectangle 137
8.6.5 Adding a Polyline 137
8.7 Cropping Images 138
8.8 Using Subtraction 139
8.8.1 Changing the Subtraction Mask 139
8.8.2 Adjusting the Mask Position 140
8.9 Using Landmarking 140
8.10 Creating a View Trace Image 141
8.11 Copying Images and Series to Reference Windows 142
8.12 Creating a Snapshot 143
8.13 Flagging Images 143
8.14 Creating Measurements 143
8.14.1 Creating a Distance Measurement 144
8.14.2 Creating a Polyline Measurement 144
8.14.3 Creating a Ratio Measurement 145
8.14.4 Creating an Angle Measurement 145
8.14.5 Creating an Open Angle Measurement 146
8.14.6 Manual Calibration 146

9 Exporting and Printing 149
9.1 Exporting Data 149
9.1.1 Exporting Data to a USB Flash Memory Drive 149
9.1.2 Exporting Data to CD/DVD 151
9.1.3 Exporting Data to a PACS 153
9.1.4 Exporting Data Using Drag and Drop 154
9.2 Printing 155
9.3 Viewing System Tasks in the Job Viewer 156

10 2D Quantitative Analysis (Option) 158
10.1 Intended Use of 2D Quantitative Analysis 158
10.2 Acquiring X-ray Images 159
10.3 Starting 2D Quantitative Analysis 160
10.4 Calibration Guidelines 160

10.5 QCA / QVA 162
10.5.1 QCA / QVA Tasks 162
10.5.2 Select Series Task 163
10.5.3 Calibration Task 163
10.5.4 Analysis Task 166
10.5.5 Result Task 168
10.6 LVA / RVA 169
10.6.1 LVA / RVA Tasks 170
10.6.2 Select Series Task 170
10.6.3 Calibration Task 170
10.6.4 End Diastole (ED) Task 173
10.6.5 End Systole (ES) Task 175
10.6.6 Editing the Contour 178
10.6.7 Result Task 178
10.7 Managing Results 184
10.7.1 Saving a Result Page 184
10.7.2 Reviewing a Saved Result Page 184
10.7.3 Deleting a Result Page 184
10.8 2D-QA Settings 185
10.8.1 Changing Default Calibration Settings 185
10.8.2 Changing QCA / QVA Default Curve Display Settings 186
10.8.3 Changing LVA Default Settings 186
10.8.4 Changing RVA Default Settings 187

11 Using Other Equipment 189

11.1 Accessories 189
11.1.1 Additional Table Accessory Rail 189
11.1.2 Arm Supports 190
11.1.3 Using the Elbow Support 190
11.1.4 Using the Arm Support Board 190
11.1.5 Using the Height-Adjustable Arm Support 191
11.1.6 Using the Shoulder Support Board 193
11.1.7 Drip Stand 193
11.1.8 Cerebral Filter 193
11.1.9 Peripheral X-ray Filters 194
11.1.10 Head Support 195
11.1.11 Mattress 195

11.1.12 Neuro Wedge 196
11.1.13 Ratchet Compressor 196
11.1.14 Accessory Rail Clamps 197
11.1.15 Handgrip and Clamp Set 197
11.1.16 XperGuide Laser Tool (Option) 198
11.1.17 Wireless Foot Switch (Option) 201
11.1.18 Tabletop Accessory Clamps 205
11.2 Third-Party Interfaces 206
11.2.1 Compatibility Statements 206
11.2.2 Connecting an Injector 206
11.2.3 Connecting Video Feeds 207
11.3 Other Devices 208
11.3.1 MultiSwitch (Option) 208
11.3.2 Wall Connection Box (Option) 208
11.3.3 Intercom (Option) 209
11.3.4 Equipment Rack (Option) 209
11.3.5 Pedestal (Option) 210
11.3.6 Pan Handle (Option) 211
11.3.7 8-Meter Cable Assembly Kit (Option) 212
11.3.8 Table Interface Panels 212

12 User Customization 215

12.1 Changing Your Password 215
12.2 Viewing System and License Information 216
12.3 Setting the Date and Time 216
12.4 Changing the Date and Time Formats 217
12.5 Changing the Physician List 217
12.6 Managing Presets from the Control Room 218
12.7 Managing Preset Groups from the Control Room 220
12.8 Managing Presets for FlexVision Using the Touch Screen Module 222
12.9 Managing Preset Groups for FlexVision Using the Touch Screen Module 225
12.10 Changing Automatic Position Control Settings 226
12.11 Customizing APC Positions for X-ray Protocols 227
12.12 Changing Viewing Preferences 228
12.13 Changing Display Preferences 229
12.14 Customizing Predefined Annotations 230
12.15 Changing Print Settings 231

13 System Administration 232

13.1 Changing Regional Settings 232

13.2 Configuring Audit Trail Settings 233

13.3 Managing Users and System Logon 233

13.3.1 Adding and Deleting Users 234

13.3.2 Resetting a User's Password 234

13.4 Changing General Patient and Workflow Settings 235

13.5 Enabling and Disabling Storage Device Export and Import 236

13.6 Mapping RIS Codes to ProcedureCards 237

13.7 DICOM Settings 237

13.7.1 Configuring Local Settings 238

13.7.2 Configuring Worklist Management and the Modality Performed Procedure Step (MPPS) Manager 239

13.7.3 Configuring Remote Systems 240

13.7.4 Configuring DICOM Printers 241

13.8 Configuring Export Protocols 242

13.9 Configuring Automatic Data Transfer 244

13.10 Network Configuration 245

13.11 Enabling or Disabling Remote Support 245

13.12 Managing ProcedureCards 246

13.12.1 Changing the Default ProcedureCard 247

13.12.2 Creating a New ProcedureCard 247

13.12.3 Editing a ProcedureCard 248

13.12.4 Copying a ProcedureCard 249

13.12.5 Moving a ProcedureCard 250

13.12.6 Deleting a ProcedureCard 250

13.12.7 Managing ProcedureCard Groups 250

13.12.8 Importing, Exporting and Restoring ProcedureCards 251

13.13 Exporting Settings 252

13.14 Importing Settings 253

13.15 Restoring Factory Default Settings 253

14 Maintenance 254

14.1 Cleaning and Disinfecting 254

14.1.1 Cleaning the Ceiling Rails 256

14.2 Removing and Replacing the Anti-Scatter Grid 256

14.2.1 Removing the Anti-Scatter Grid 256

14.2.2 Replacing the Anti-Scatter Grid 257
14.3 Replacing Batteries 257
14.4 Planned Maintenance Program 258
14.5 User Quality Control Mode 259
14.6 User Verification Test 259
14.6.1 Automatic Exposure Control Test 260
14.6.2 Beam Limitation Check 260
14.7 Viewing and Testing Network Connections 261
14.8 Activating the Screen Saver 262
14.9 Viewing Audit Logs 262
14.10 Saving Information for Technical Support 262
14.10.1 Saving a Series for Technical Support 263
14.10.2 Saving a Log File for Technical Support 263
14.11 Enabling and Disabling Remote Assistance 263
14.12 Updating the System Software 263
14.13 Showing the Monitor Test Image 266
14.14 XperCT Calibration 266
14.14.1 Pre-Scan Calibration 266
14.15 Environmental Impact of the System 267
14.16 Disposing of the System 267

15 Security 269

15.1 Customer Responsibilities 269
15.1.1 Risks Related to Security 269
15.2 Malware Protection 270
15.2.1 Security Patches 270
15.2.2 Whitelist Protection 270

16 Technical Information 271

16.1 Environmental Requirements 271
16.2 X-ray System Configuration 271
16.2.1 Tube Output Power 273
16.2.2 Accuracy of Dosimetric Indications and Automatic Control System 274
16.3 X-ray Generator 274
16.4 Anti-Scatter Grid 277
16.5 Mains Power 277
16.6 Monitor Ceiling Suspension 278
16.6.1 FlexVision (XL) Monitor Ceiling Suspension 279

16.6.2 Supported Monitor Combinations 279
16.6.3 MCS Cabling Interface 280
16.7 Springarm Monitor Ceiling Suspension 280
16.8 Medical Monitor Boom 280
16.9 Examination Light 280
16.10 Detectors 281
16.11 Beam Carriers 283
16.12 Beam Carriers with FlexMove 286
16.13 Patient Table 286
16.14 Accessories and Detachable Parts 288
16.14.1 XperGuide Laser Tool 289
16.15 Wireless Foot Switch 290
16.16 Ceiling-Suspended Radiation Shield 290
16.17 Wall Connection Box 291
16.18 Network Data 292
16.19 System Settings Influencing the Radiation Dose 292
16.19.1 X-ray Protocol Selection 292
16.19.2 Fluoroscopy and Exposure Time to Reach the 2 Gy Limit 299
16.19.3 Source-to-Skin Distance Spacer 302
16.20 Typical Reference Air Kerma (Rate) Values 302
16.20.1 Monoplane C12/F12 Systems 303
16.20.2 Monoplane C12/F12 Systems with ClarityIQ Option 305
16.20.3 Monoplane F15 Systems 308
16.20.4 Monoplane F15 Systems with ClarityIQ Option 310
16.20.5 Monoplane C20/F20 Systems 313
16.20.6 Monoplane C20/F20 Systems with ClarityIQ Option 316
16.20.7 Biplane F12/12 Systems 318
16.20.8 Biplane F12/12 Systems with ClarityIQ Option 323
16.20.9 Biplane F20/12 Systems 328
16.20.10 Biplane F20/12 Systems with ClarityIQ Option 333
16.20.11 Biplane F20/15 Systems 338
16.20.12 Biplane F20/15 Systems with ClarityIQ Option 344
16.20.13 Examples of Settings with a Relatively High Air Kerma (Rate) 349
16.20.14 Reference Air Kerma Measurement Setup 349
16.21 Protection Against Stray Radiation 351
16.21.1 Zone of Occupancy 352

16.21.2 Isokerma Maps for C12/F12 System 353
16.21.3 Isokerma Maps for F15 System and C20/F20 System 354
16.21.4 Isokerma Maps for B20 System 354
16.21.5 Additional Filtering 355
16.21.6 User Dose and Imaging Information for Cone Beam CT Reconstructions 356
16.22 Electromagnetic Compatibility 362
16.23 Equipment Labels 367
16.24 Symbols Used on the Equipment 379

17 Regulatory Information 382
17.1 Frequently Used Functions 382
17.2 Applied Parts 382
17.3 System Version 383
17.4 Third Party Software 384
17.5 Installation and Equipment Connections 384
17.6 Contacting the Manufacturer 388

18 Quick Reference 389
18.1 WorkSpot 389
18.1.1 Acquisition Monitor 389
18.1.2 Review Monitor 391
18.2 FlexSpot (Option) 393
18.2.1 FlexSpot Primary Monitor 394
18.2.2 FlexSpot Secondary Monitor 395
18.2.3 Additional FlexSpot 395
18.3 FlexVision (Option) 395
18.4 Touch Screen Module 397
18.4.1 Touch Screen Gestures 398
18.5 Status Area 398
18.5.1 Status Area - Monoplane System 399
18.5.2 Status Area - Biplane System 402
18.5.3 Collision Indicators 409
18.6 Toolbars 410
18.7 Global Tools 412
18.8 Monoplane Control Module 413
18.9 Biplane Control Modules 415
18.10 Review Module 417
18.11 Using the Mouse 419

18.12 Viewpad 419
18.13 Bolus Chase Reconstruction Main Window Toolbars 421
18.14 Bolus Chase Reconstruction Overview Image Window Toolbar 422

19 Glossary 424

19.1 Definitions 424
19.1.1 Windows, Panels, Views, and Viewports 424
19.1.2 Patient Table: Doctor Side and Nurse Side 425
19.1.3 Dose Related Definitions 426
19.1.4 Dose Model 428
19.1.5 Interventional Tools 430
19.1.6 Injector Control Methods 430
19.2 Abbreviations 431

1 Introduction

Welcome to the Azurion Instructions for Use. Before using the system, read these Instructions for Use, especially the information contained in the Safety section.

1.1 About These Instructions for Use

These Instructions for Use are intended to assist you in the safe and effective operation of the system.

Important safety information is provided in the following ways:

WARNING
A warning alerts you to a potential serious outcome, adverse event, or safety hazard. Failure to observe a warning may result in death or serious injury to the operator or patient.

CAUTION
A caution alerts you when special care is necessary for the safe and effective use of the system. Failure to observe a caution may result in moderate personal injury or damage to the equipment, and presents a remote risk of more serious injury or environmental pollution.

NOTE ***Notes highlight unusual points as an aid to the operator.***

An electronic version of these instructions for use is available to view within the system. A set of printed Emergency Instruction Cards is also provided.

This manual may describe some products or features that are not available in all countries. Please contact your local sales representative for the availability of products and features in your region.

1.2 Electronic Instructions for Use

These Instructions for Use are available to view on the screen while you are using the system.

- To open the electronic Instructions for Use, do one of the following:
  - On the **Help** menu in the review window, click **Help**.
  - Press F1 on your keyboard.
- To move the window containing the electronic Instructions for Use, drag the header bar to the desired location on the screen.
- To browse topic headings, use the table of contents in the left pane of the viewing window.
- To expand and close topic headings, click the arrow next to the heading. If a heading does not have an arrow next to it, it cannot be expanded further.
- To go directly to a topic, click the corresponding heading in the table of contents. The topic is displayed in the right pane of the viewing window.
- To move sequentially between topics, click **Back** or **Forward**.
- To close the electronic Instructions for Use, click **Close**.

The electronic Instructions for Use are available in several languages. To change the language, see *Changing Regional Settings* (page 232).

1.2.1 Searching the Electronic Instructions for Use

You can search the electronic Instructions for Use using keywords to help you find what you are looking for more quickly.

1 Click inside the search box and enter the keywords that you want to search for.



2 Click **Search** or press Enter to display the search results in the search window.

3 To view a topic, click it in the search results.

1.3 Intended Use of the System



CAUTION

In the United States, Federal law restricts this device to sale, distribution, and use by, or on the order of, a physician.

Indications for Use

The Azurion series (within the limits of the used Operation Room table) are intended for use to perform:

- Image guidance in diagnostic, interventional and minimally invasive surgery procedures for the following clinical application areas: vascular, non-vascular, cardiovascular and neuro procedures.
- Cardiac imaging applications including diagnostics, interventional and minimally invasive surgery procedures.

Additionally:

- The Azurion series can be used in a hybrid Operation Room.
- The Azurion series contain a number of features to support a flexible and patient centric procedural workflow.

Patient Population

All human patients of all ages. Patient weight is limited to the specification of the patient table.

Intended Operator Profile

The Azurion series are intended to be used and operated by: adequately trained, qualified, and authorized health care professionals who have understanding of the safety information and emergency procedures as defined by local laws and regulations for radiation workers and staff.

Clinical Environment

The Azurion system is a fixed and stationary system that can be used in a clinical environment fulfilling the local laws and regulations for radiological X-Ray systems in sterile and non-sterile environments.

General Safety and Effectiveness

To facilitate safe and efficacious operation of the system by a trained healthcare professional, instructions for use are provided as part of the device labeling, as well as training at system handover.

1.4 Compatibility



WARNING

Do not use the system in combination with other parts or products unless they are expressly recognized as compatible by Philips Medical Systems.

A list of products or parts that are recognized as compatible by the manufacturer can be obtained from the manufacturer. See *Contacting the Manufacturer* (page 388).

An overview of the compatibility of certifiable components as required by 21CFR1020.30 (g) is available on the InCenter Document Distribution System. Log on to the following website with the InCenter user account that is supplied with the system:

incenter.medical.philips.com

More information is available from manufacturer. See *Contacting the Manufacturer* (page 388).

1.5 Contraindications

Avoid using the system with patients who are pregnant or who may possibly be pregnant. However, the risk may be outweighed by the benefit of diagnosing or treating a serious condition. It is the responsibility of the personnel operating the system to make the decision. Avoid using the system in case of existing radiation injury (operator or patient).

1.6 Training

Do not attempt to operate the system without adequate training in accordance with local laws or regulations.

As a minimum level of training, you should read and understand these Instructions for Use. Application training is also available. More information is available from the manufacturer. See *Contacting the Manufacturer* (page 388).

1.7 Help and Guidance

Help and guidance are available in the user interface while you are using the system.



Help Button

The **Help** button is available next to main functions. When you click this button, a help box is displayed containing information for using that function.

Only one help box can be displayed at a time. If you open a second help box, the first box is automatically closed.



To close a help box, click **Close**.

NOTE ***To open the full electronic Instructions for Use, press F1.***

Task Guidance

Guidance for performing tasks is displayed as instructions in the application panels.

Tooltips

Pause the pointer over a button to display a tooltip that provides information about the function.

2 Safety

Philips Medical Systems products are designed to meet stringent safety standards. All medical electrical equipment requires proper installation, operation, and maintenance to ensure personal safety and correct operation.

WARNING
Do not use the system if you suspect that any part of the equipment is defective. Operation of the system in a defective state could lead to fatal or serious injury. It could also lead to clinical misdiagnosis or clinical mistreatment. For information about verifying the functionality of the system, see User Verification Test (page 259).

If you suspect that any part of the equipment is defective, contact technical support.

WARNING
Never attempt to remove, modify, override or frustrate any safety device on the system. Interfering with safety devices could lead to fatal or other serious personal injury.

Only qualified and authorized personnel may operate, repair, or maintain this equipment. "Qualified" means those legally permitted to operate this type of medical electrical equipment in the jurisdictions in which the equipment is being used, and "authorized" means those authorized by the owner of the equipment.

Personnel operating the equipment and personnel in the examination room must observe all laws and regulations that apply to the operation of this equipment. If in doubt, do not use it.

Product Symbols
For information about the symbols that are used with this product, refer to the following website:

www.symbols.philips.com

2.1 Emergency Procedures

You should read and understand the emergency procedures in this section before using the system.

NOTE ***In a hospital environment, an emergency power-off switch may be installed to interrupt the mains power supply to the system. For more information, contact technical support.***

2.1.1 Clinical Emergency

In the event of a clinical emergency, use this procedure to reset the system to its default position and provide all-round access to the patient.

►0◄ 1 Press the **Reset Geo** button on the control module.

2 Manually move the C-arm or tabletop to provide access to the patient.

2.1.2 Cardiopulmonary Resuscitation

In the event of a clinical emergency involving a patient requiring cardiopulmonary resuscitation (CPR), directly start the CPR procedure.

CPR is possible in any tabletop position. However, to make CPR easier to perform, follow this procedure.

NOTE ***If a Trumpf OR table is in use, refer to the Emergency Instructions Card supplied with the system for details of how to position the Trumpf table for CPR.***

1 Move the detector away from the patient.

2 Ensure that there is all-round access to the patient.

If applicable, pivot the table to improve access. For more information, see *Pivoting the Table* (page 65).

3 Move the patient above the table base to reduce the effect of flexing of the tabletop.

4 Adjust the tabletop height to an appropriate height.

5 Perform CPR.

2.1.3 Emergency Stop

To stop all system movements during an emergency in the examination room, press the emergency **STOP** button.

The emergency **STOP** button is located on the control module.

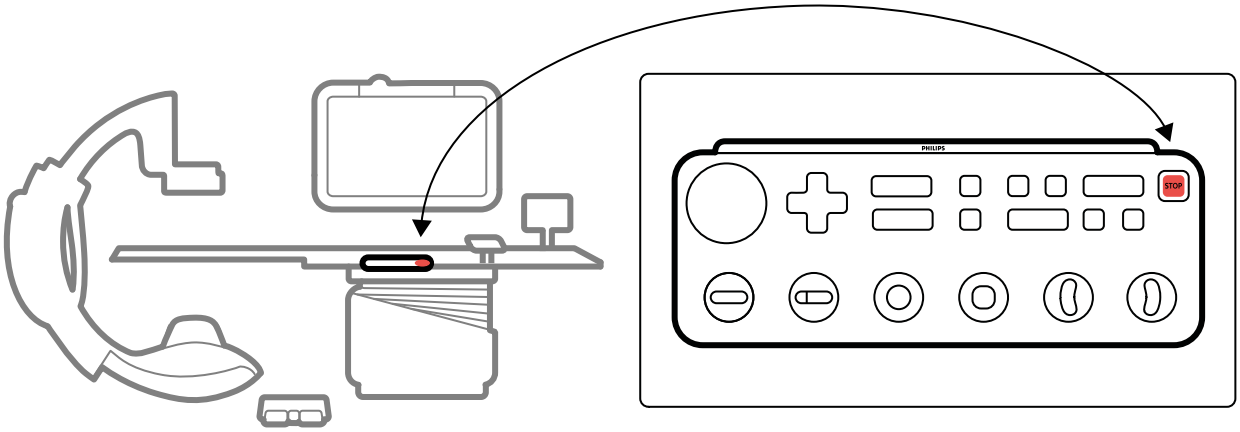

Figure 1 Emergency Stop button

1 Press **STOP** on the control module.

All motorized movements are stopped. You can manually rotate the C-arm and push the monitor ceiling suspension.

Floating the tabletop after an emergency stop action depends on the following conditions:

- If the tilt option is not installed, you can float the tabletop laterally and longitudinally.
- If the VA brake option is installed, it is not possible to float the tabletop.
- If the tilt option is installed, and the VA brake option is not installed, you can float the table laterally but not longitudinally.

2 To reset the system and restart it, press and hold the **Power On** button for approximately two seconds.

For more information, see *Restarting the System* (page 46).

2.2 Electrical Safety

Follow the electrical safety guidelines in this section. Failure to do so could cause serious or fatal injury to the patient, and could damage the equipment.

The room where the system is used must comply with all applicable laws and regulations, or regulations concerning electrical safety for this type of equipment. The combination of the system and the connected equipment must comply with the requirements for medical electrical systems as specified in the IEC 60601-1 standard.

Voltages

Dangerous electrical voltages are present within the system. Covers or cables should only be removed by qualified and authorized service personnel.

Do not touch electrical connectors on the patient table or on the monitor ceiling suspension while simultaneously touching the patient. Connector contact pins may carry low voltages that are safe to touch, but that may be harmful to the patient.

Electrical Grounding (Earth)

You can only connect medical equipment to the system if that equipment is galvanically isolated from the system. For medical equipment interfacing using Ethernet, video, or USB, galvanic isolation is ensured by using a wall connection box. For more information, contact technical support.

Protection Against Patient Leakage Current

An equipotential ground connection point is provided at the base of the patient table. If an operating table is installed, the ground connection point is located on the surgery wall connection box. For more information, contact technical support.

Cables

Electrical current may still be present in cables that are no longer connected to the system, but that are still connected to the wall connection box. Store these cables on the cable holder outside the patient environment. If the cable holder is located inside the patient environment, ensure that the connectors are covered with a rubber cap. If a cap is not available, take precautions to prevent cable connectors from coming into contact with liquids.

Do not use multiple socket outlets or extension cables for installing or connecting any part of the system. Such cables can compromise the electrical safety of the system, especially for equipment in the examination room near the patient.

Cleaning

Switch the system off before cleaning or disinfecting it. Do not use cleaning agents or damp cloths on connector contact pins. For more information, see *Cleaning and Disinfecting* (page 254).

2.3 Mechanical Safety

This section provides information about how to avoid collisions when using the system.

Stand and Table

WARNING

During manual and motorized movements of the stand or the table, the operator is responsible for the safety of patient, staff, and equipment. Avoid collisions to prevent serious injury to patient and staff, or damage to the equipment.

Collisions may occur in the following situations:

- With the stand in any position, the tabletop may hit the stand during the longitudinal, lateral, and height movements of the tabletop. Collisions may also occur during tilt movements, if applicable.
- With the stand at the head end of the tabletop, the stand may hit the tabletop during angulation or rotation movements.

The system is installed with safety devices to help you avoid collisions during motorized movements:

- Mechanical devices, such as slip clutches and motor current thresholds, are installed to limit harm or damage during a collision.
- Movement controls need to be continuously activated by the operator to start and continue a motorized movement. Releasing the control stops the movement. (The exception to this is if the alternating **Float Tabletop** mode is configured on your system. In this case, pressing and releasing the pan handle alternately releases and activates the tabletop brake.)
- The BodyGuard system senses distances between the stand and other objects and slows the movement speed when an object is detected within a certain distance of a sensor. The BodyGuard system does not prevent all collisions, but if a collision occurs, the collision force will be lower because of the reduced movement speed.
- Collision switches on the lateral stand can detect a collision and stop motorized movements.

Monitor Ceiling Suspension

Use caution when moving the monitor ceiling suspension. Take care not to trap the patient between the monitor ceiling suspension and the table.

Electrophysiology Systems

Third-party Electrosphysiology systems may interfere with the BodyGuard sensor on the X-ray tube cover. When such systems are activated, the sensor on the X-ray tube cover is not reliable, and the stand may collide with the Electrophysiology equipment under the tabletop.

2.4 Explosion Safety

Using the system in an environment for which it was not designed can cause fire or explosion.

Do not use the system in the presence of explosive gases or vapors, such as certain anaesthetic gases.

Do not use flammable or potentially explosive disinfectant sprays. For more information, see *Cleaning and Disinfecting* (page 254).

2.5 Fire Safety

Fire regulations for the type of medical environment being used should be fully observed, applied, and enforced. Using the system in an environment for which it was not designed can cause fire or explosion.

Fire extinguishers should be available for both electrical and non-electrical fires. Only use fire extinguishers on electrical or chemical fires that are specifically labeled for those purposes. Using water or other liquids on an electrical fire can cause fatal or serious personal injury.

If it is safe to do so, switch off the system before attempting to fight a fire. This reduces the risk of electric shocks.

2.6 Electromagnetic Compatibility

This section provides guidance for using the system while maintaining electromagnetic compatibility in your environment.

Medical electrical products require special precautions regarding electromagnetic compatibility, and should be installed and put into service according to information provided in the accompanying documents.

The Azurion medical electrical system, further referred to as the system, is intended for use in a professional healthcare environment. Operation in any other environment may compromise electromagnetic compatibility. The system and its components should not be directly connected to the public low-voltage power supply network.

WARNING
The use of accessories, transducers, and cables other than those specified for this equipment may result in increased electromagnetic emissions or decreased electromagnetic immunity and result in improper operation.

WARNING
The equipment should not be used adjacent to, or stacked with, other equipment. If adjacent or stacked use is necessary, the responsible organization must verify that the all equipment operates normally in the configuration in which it will be used.

WARNING
Do not acquire X-ray images while actively using electrosurgical devices (for example, electrosurgical knives), or cardiac defibrillators. The electromagnetic interference generated by these devices may reduce image quality, resulting in additional exposure runs being required.

WARNING
Portable RF communications equipment (including peripherals such as antenna cables and external antennas) should be used no closer than 30 cm (12 in) to any part of the equipment and cables of the system. Otherwise, degradation of the performance of the equipment could result.

WARNING
Do not use X-ray images acquired during a Biosense electrophysiology procedure for diagnostic purposes since electromagnetic interference generated by the Biosense equipment may reduce image quality. These images are for non-diagnostic viewing only.

The system complies with relevant international and national laws and standards (IEC60601-1-2) on electromagnetic compatibility for this type of product, when it is installed and used as intended. These laws and standards define both the permissible electromagnetic emission levels from the system and its required immunity to electromagnetic interference from external sources.

Other electronic products that exceed the limits defined in these standards could, in unusual circumstances, affect the operation of the system. Note the following:

- Radio services operating in frequency bands and disturbance characteristics that are not covered by CISPR11 may be disturbed. If safety critical radio services are used in or near the facility where the system is used, the responsible organization should evaluate the risks associated with radio disturbance.
- Mobile devices can affect medical electrical equipment. Use caution when using such devices within the specified range of medical electrical devices.

For more information, see *Electromagnetic Compatibility (technical information)* (page 362).

2.7 Radiation Safety

WARNING
The system is intended for procedures in which air kerma levels can be high enough during normal use to constitute a risk of deterministic effects. To manage these risks, follow the radiation guidelines in this section.

In accordance with IEC 60601-1-3:2008 (5.2.4.5 Deterministic Effects) and IEC 60601-2-54:2009 (203.5.2.4.5.101 Dosimetric Information), these Instructions for Use provide measures to take to reduce the risk of deterministic effects, for the intended use of the system. In general, you should work in accordance with the ALARA (As Low As Reasonably Achievable) radiation safety principles: minimize radiation time, maintain distance from the source and provide shielding. More specifically, the following measures should be taken to minimize the deterministic effects of X-ray radiation on the patient (in order of workflow):

Patient Safety

- Never radiate unless absolutely necessary and only radiate for as short a time as possible.
- Select an appropriate X-ray protocol for the current procedure:
  - For exposure, select an X-ray protocol with the lowest possible framespeed.
  - For exposure, select an X-ray protocol with the lowest possible dose level.
  - For fluoroscopy, select the fluoroscopy flavor with the lowest dose level.
  - For vascular procedures, make appropriate use of the multiphase speeds and do not use higher frame rates than are necessary.
  - For user-selected X-ray protocols, allow optimized operation for indicated clinical protocols.
- Immobilise the patient to prevent the need to reacquire images due to patient movement.
- Select the appropriate patient type.
- Select the largest suitable field size for the current procedure (per X-ray plane).
- Use the radiation disable switch at all times to prevent accidental exposure to radiation (except when the radiation procedure is in progress).
- Shield sensitive organs when they are exposed to the beam or are in proximity to it.
- Use caution if the patient has acute skin burns or acute hair loss.
- Minimize the duration of radiation in fluoroscopy and exposure acquisition. Modifying settings like collimation, can also be performed while the last image hold image is displayed.
- Collimate as much as possible and position the detector as close as possible to the object.
- Keep the patient as far as possible from the X-ray source, using the table height setting.
- Keep the focal spot to skin distance as large as possible.
- Use different X-ray beam projections, to spread radiation over the skin.
- Avoid oblique projections, in order to reduce the depth of tissue irradiated.
- Consider using fluoroscopy instead of exposure acquisition.
- Clear the primary beam of unnecessary objects. They may cause adverse affects such as unnecessary patient dose and misinterpretation of images.
- Use only the prescribed air kerma (rate) necessary to perform a procedure.
- Release all hand switches and foot switches if the display of live images stops.
- Release and depress the hand switch or foot switch again when the requested X-ray does not start or stop automatically.
- Position the patient and the system as accurately as possible without using radiation.
- Avoid including the table rails in the X-ray image. This can cause unnecessary radiation load for the patient.

Staff Safety

- Make full use of the system's radiation protection features, devices, accessories, and procedures that are available to you as the operator. For more information, see *Using Radiation Shields* (page 67).
- Always wear a lead apron and use badges to monitor the radiation received.
- Stay as far away from the radiated object as possible.
- Use caution if any member of staff has a chronic radiation injury.
- Remove all unnecessary obscuring objects from the primary beam (including the operator's hands).
- Keep the X-ray source under the table.
- Do not attempt to remove, modify, override, or frustrate any safety device on the equipment.

NOTE ***When door contacts should give a warning for radiation using the room warning light, the configuration of the door contacts should be implemented by the user.***

More Information

The following table summarizes the effects of the most significant measures on skin dose rate, air kerma rate, dose area product, and staff dose.

Measure	Effect on skin dose rate	Effect on Ref.AK-rate	Effect on DAP-rate	Effect on staff dose
Selecting the appropriate X-ray protocol dose level	+	+	+	+
Reducing framespeed (by X-ray protocol/ multiphase)	+	+	+	+
Selecting the largest field size	+	+	-	-
Limiting the duration of fluoroscopy/exposure	+	+	+	+
Applying proper collimation and wedges	0	0	+	+
Increasing the distance from the patient to the X-ray source (at a constant SID)	+	0	0	0
Minimizing the SID at a constant table height	+	+	0	0
Using different X-ray beam projections	+	0	0	0
Avoiding oblique projections	+	+	+	+
+ = positive effect (less dose), **-** = negative effect (more dose), **0** = no significant effect				

Patient thickness also influences the deterministic effects of X-ray radiation.

For more information about improving radiation safety during procedures, see the following sections:

- *System Settings Influencing the Radiation Dose* (page 292)
- *Protection Against Stray Radiation* (page 351)
- *Additional Filtering* (page 355)

You are strongly urged to read the current recommendations of the International Commission on Radiological Protection, and in the United States, with those of the US National Council for Radiological Protection.

- ICRP, Pergamon Press, Oxford, New York, Beijing, Frankfurt, São Paulo, Sydney, Tokyo, Toronto.
- NCRP, Suite 800, 7910 Woodmont Avenue, Bethesda, Maryland 20814, USA.

2.7.1 Pediatric Radiation Guidelines

When performing pediatric radiation, you should follow these guidelines:

- Follow the guidelines provided in *Radiation Safety* (page 22).
- Do not radiate when it is not necessary. Use a non-ionizing radiation modality whenever possible (for example, ultrasound).
- Remove any objects in the beam that are not radiolucent or that are not necessary to perform the procedure (for example, mattresses, pillows, tubes).
- Select the correct patient type and the correct examination protocol for the anatomy.
- Select the lowest fluoroscopy flavor with the lowest dose.
- Position the detector as close as possible to the patient.
- Use electronic zoom instead of detector zoom.
- Use collimation as much as possible to protect areas outside the region of interest. Exclude eyes, thyroid, breast, and gonads when possible. When possible, perform collimation on the Last Image Hold image. Use semi-permeable wedges.

- Consider using **Fluoro Store** as an alternative to acquisition.
- Radiate for the shortest time possible, use the Last Image Hold image to review the anatomy rather than live fluoroscopy.

Before you use the equipment for pediatric cases, Philips recommends reviewing generally available resources on pediatric imaging, such as the following:

- The U.S. Food and Drug Administration
  www.fda.gov/Radiation-EmittingProducts/RadiationEmittingProductsandProcedures/MedicalImaging/ucm298899.htm
- The Alliance for Radiation Safety in Pediatric Imaging
  www.imagegently.org
- The Society for Pediatric Radiology
  www.pedrad.org

2.8 Hazardous Substances

Parts of the system may contain hazardous substances that must be recycled or disposed of in accordance with local, state, or federal laws.

Item	Lead (Pb)	Mercury (Hg)	Cadmium (Cd)
Electronic modules	X	O	O
Flat screens	O	O	O
Detector	X	O	O
Radiation shielding	X	O	O
Collimator	X	O	O
Grid	X	O	O
X-ray tube	X	O	O
Electromechanical parts	O	O	O

O: Indicates that this substance, as contained in all materials for this part, is below the limit required in SJ/T11363-2006.
X: Indicates that this substance, as contained in at least one of the materials used for this part, is above the limit required in SJ/T11363-2006.

Item	Hexavalent Chromium (Cr6+)	Polybrominated Biphenyls (PBB)	Polybrominated Diphenyl Ethers (PBDE)
Electronic modules	O	O	O
Flat screens	O	O	O
Detector	O	O	O
Radiation shielding	O	O	O
Collimator	O	O	O
Grid	O	O	O
X-ray tube	O	O	O
Electromechanical parts	O	O	O

O: Indicates that this substance, as contained in all materials for this part, is below the limit required in SJ/T11363-2006.
X: Indicates that this substance, as contained in at least one of the materials used for this part, is above the limit required in SJ/T11363-2006.

Perchlorate

Perchlorate material is present in lithium coin cells or batteries that are used in the system. Special handling may apply. For information, go to the following website:

www.dtsc.ca.gov/hazardouswaste/perchlorate

REACH Declaration

REACH requires that Philips Medical Systems provides chemical content information for Substances of Very High Concern (SVHC) if they are present in amounts above 0.1% of the product weight. Components with electric or electronic equipment may contain phthalates above the threshold (for example, bis(2-ethyl(hexyl)phthalate), CAS nr.: 117-81-7). Philips Medical Systems is still in the process of investigating its supply chain to further establish which components contain phthalates. The SVHC list is updated on a regular basis. For the latest list of products that contain SVHC above the threshold, go to the following website:

www.philips.com/about/sustainability/reach

3 About the System

The system is available in the following configurations.

Monoplane systems:

- Azurion C12 and F12: A ceiling or floor-mounted monoplane system with a 12-inch flat detector.
- Azurion F15: A floor-mounted monoplane system with a 15-inch flat detector.
- Azurion C20 and F20: A ceiling or floor-mounted monoplane system with a 20-inch flat detector.
- Azurion C20 OR: A ceiling-mounted monoplane system with a 20-inch flat detector and an interface for an OR table.

All biplane systems have a floor-mounted frontal stand and a ceiling-mounted lateral stand:

- Azurion F12/12: A biplane system with a 12-inch flat detector on the frontal stand and a 12-inch flat detector on the lateral stand.
- Azurion F20/12: A biplane system with a 20-inch flat detector on the frontal stand and a 12-inch flat detector on the lateral stand.
- Azurion F20/15: A biplane system with a 20-inch flat detector on the frontal stand and a 15-inch flat detector on the lateral stand.
- Azurion F12/12 OR: A biplane system with a 12-inch flat detector on the frontal stand and a 12-inch flat detector on the lateral stand, and an interface for an OR table.
- Azurion F20/12 OR: A biplane system with a 20-inch flat detector on the frontal stand and a 12-inch flat detector on the lateral stand, and an interface for an OR table.
- Azurion F20/15 OR: A biplane system with a 20-inch flat detector on the frontal stand and a 15-inch flat detector on the lateral stand, and an interface for an OR table.

NOTE ***A monoplane system may also be designated with M, such as M20. Similarly, the designation B indicates a biplane system, such as B20/15.***

3.1 Equipment in the Examination Room

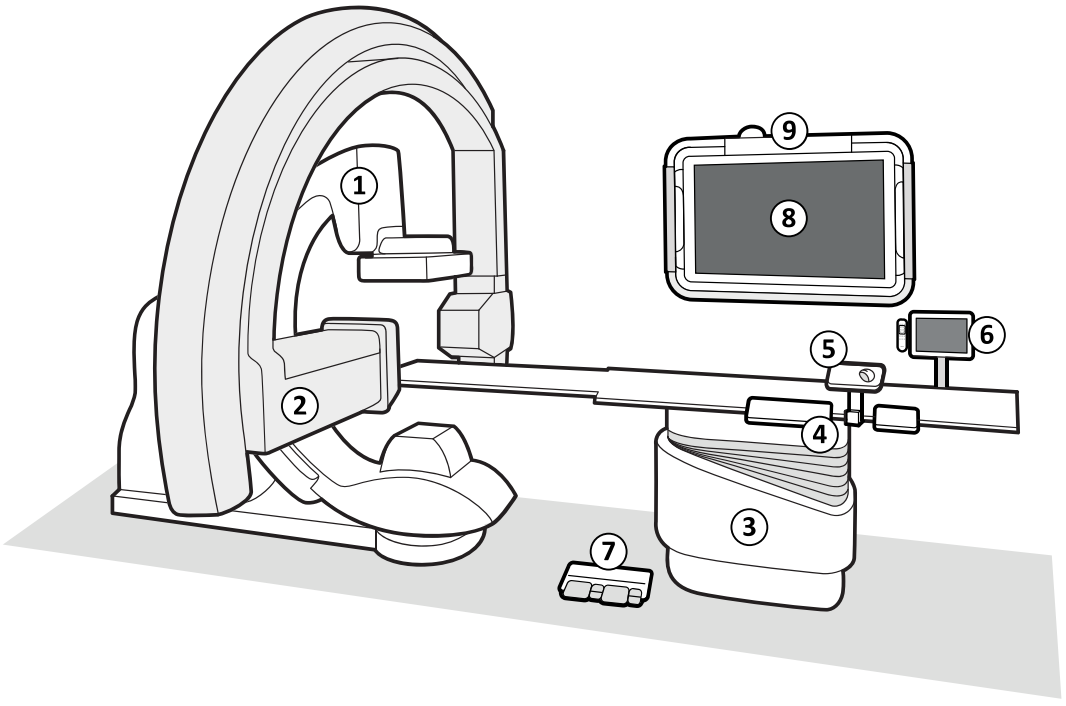

Figure 2 General system components in the examination room

Legend			
1	Frontal stand (for monoplane systems, the stand may be floor or ceiling-mounted)	6	Touch screen module and viewpad holder
2	Lateral stand (biplane systems only)	7	Foot switch
3	Patient table	8	Monitors
4	Control module	9	Monitor ceiling suspension
5	Mouse and mouse table (option)		

3.1.1 Stand

The stand allows you to position the detector and X-ray tube in relation to the patient table using the control module.

Monoplane Stand

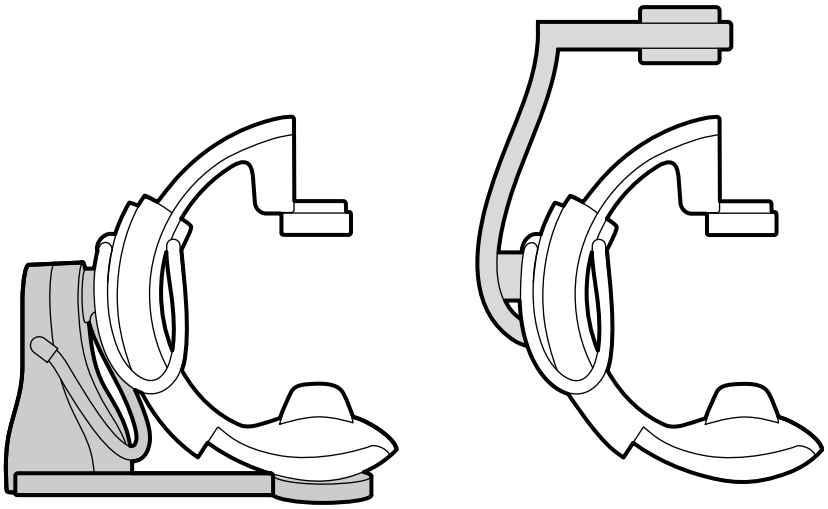

Figure 3 Floor-mounted stand (left) and ceiling-mounted stand (right)

The monoplane stand can be floor or ceiling-mounted.

Biplane Stands

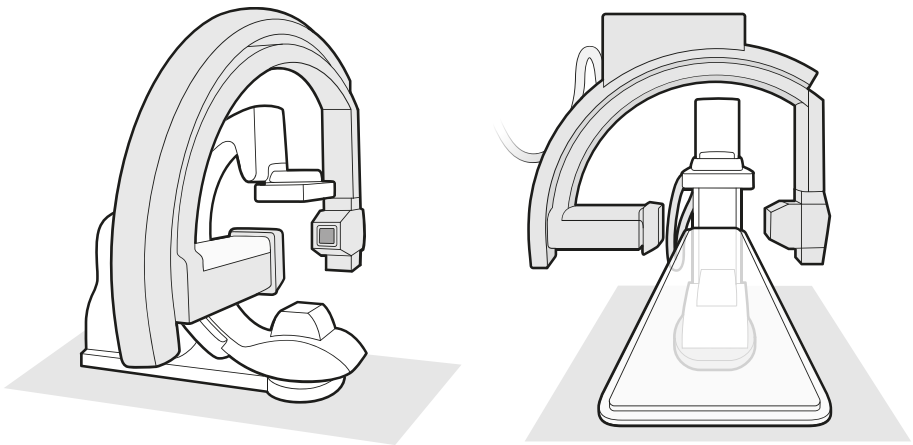

Figure 4 Two views of the frontal stand and lateral stand of a biplane system

3.1.2 FlexVision (Option)

FlexVision is a single ultra-high-definition monitor situated in the examination room.

FlexVision allows you to display and control multiple applications in individual windows. The applications that are available depend on the configuration, but you can customize the layout of the windows. You can apply predefined screen layouts (presets) or modify the layout during the procedure. For more information about selecting a preset for use and managing presets, see *Selecting a Different Preset for FlexVision* (page 94) and *Managing Presets for FlexVision Using the Touch Screen Module* (page 222).

3.1.3 FlexMove (Option)

FlexMove allows you to park the C-arm in a stand-by position and then move it into position when needed during the procedure.

If the FlexMove option is installed, the C-arm moves longitudinally and laterally on ceiling-mounted rails. For more information, see *FlexMove* (page 60).

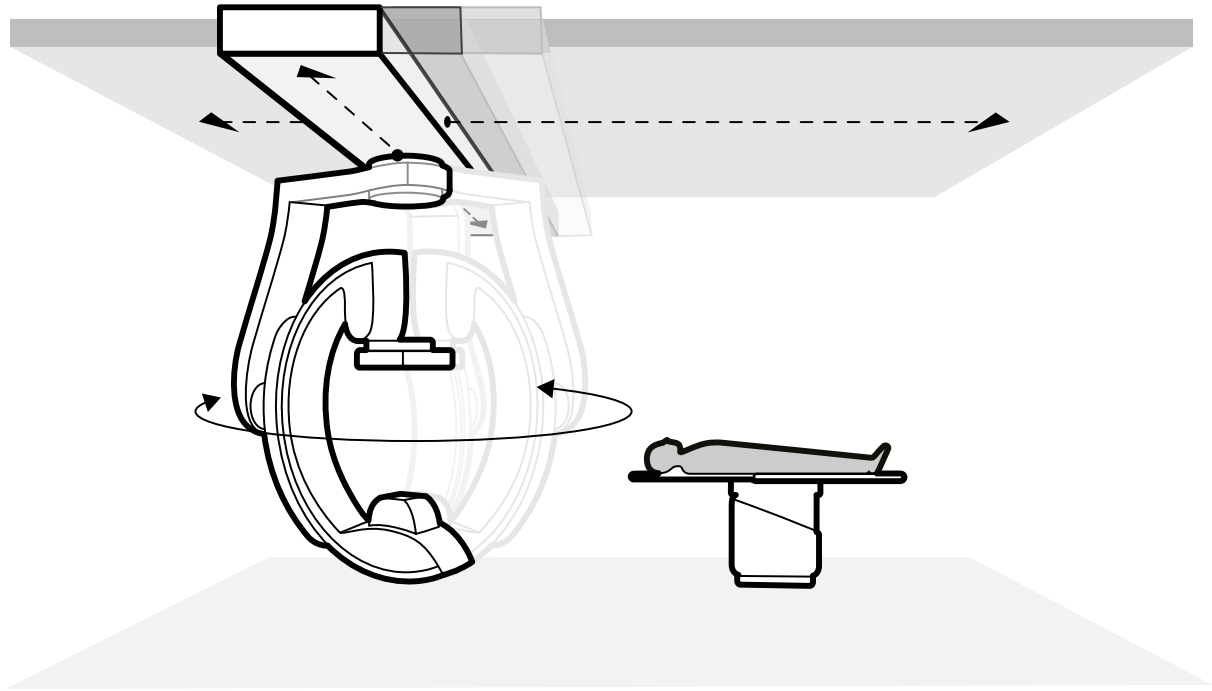

Figure 5 FlexMove option

3.1.4 Collision Prevention (BodyGuard)

The BodyGuard collision prevention system protects the patient by slowing system movement speeds when an object is sensed within a certain safety distance.

CAUTION
If a collision occurs involving any part of the system, contact technical support.

If a collision occurs that causes any equipment cover to break or become detached, you should do the following:

- Finish the case
- Switch off the power
- Contact technical support

BodyGuard is designed to prevent collisions with the patient during normal use of the system, when the patient is lying on the table and the table is not pivoted more than 13 degrees (if the pivot option is installed). When the patient is not lying on the table, or when the table is pivoted more than 13 degrees, then the BodyGuard function cannot fully safeguard the patient during rotation and angulation movements. BodyGuard cannot prevent all collisions, but if a collision occurs, the collision force will be lower because of the reduced movement speed.

The stand is fitted with BodyGuard sensors in the following locations:
- Around the detector
- Around the X-ray tube and collimator housing
- At the front edge of the stand (depending on the stand in use)

BodyGuard sensors are switched off when the stand is performing the following movements:
- Rotation scan
- High-speed rotation scan
- Bolus chase

To ensure that the path is clear in these situations, a trial run is performed. To prevent a collision, the patient should remain stationary between the trial run and the acquisition run, which is performed at a higher speed.

Note the following information concerning the BodyGuard function:
- Do not place a solid object that is not electrically conductive on the patient. Such objects cannot be detected by the BodyGuard sensor and a collision may occur.
- The BodyGuard sensor has a blind spot in its center. Small objects, such as the patient's nose or a very small child (for example, a baby of less than 1 kg) may not be detected when approached from directly above.
- When the tabletop is fully extended towards the stand, do not lower it, and do not angulate the stand cranially as the tabletop can collide with the inside of the stand, trapping the patient’s fingers.
- BodyGuard sensors must be kept dry, otherwise the BodyGuard system operates with reduced efficiency and reduced speed.
- If the BodyGuard becomes defective, stand movements are only possible at reduced speed.

Collision Indicators

Collisions involving the frontal stand are detected by current sensing and, depending on the stand in use, force sensing. Collisions involving the lateral stand are detected by collision switches. Collisions involving the table are detected by force sensors during table height movement.

When a collision is detected, a collision indicator is displayed in the following locations:
- In the status area of the live X-ray window in the examination room.
- In the status area of the acquisition window in the control room.

Icon	Description
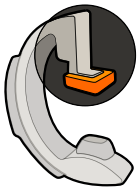	A detector collision has been detected
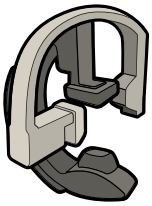	A collision of the frontal stand and the lateral stand has been detected (for more information, see *Intelligent Collision Protection* (page 32))

Icon	Description
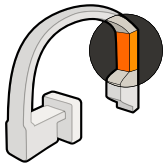	A lateral stand collision has been detected
	A detector collision on the lateral stand has been detected
	A tube collision on the lateral stand has been detected
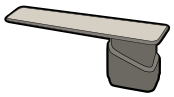	A table collision has been detected
	A collision between the stand and the table has been detected (for more information, see *Intelligent Collision Protection* (page 32))
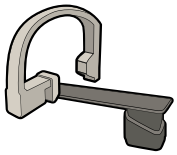	A collision between the lateral stand and the table has been detected (for more information, see *Intelligent Collision Protection* (page 32))

For more information, see *Status Area* (page 398).

Optional Configurations

The system can be customized such that certain BodyGuard sensors are switched off when they are below the table during APC movements. This optional function is known as BodyGuard Off Below Table. When it is enabled, BodyGuard does not prevent a collision when a part of the patient, such as the patient's arm, is below the level of the tabletop. When the stand is positioned at the doctor or nurse side, the BodyGuard sensor on top of the stand is not switched off, to prevent a collision with the operator's legs.

The optional Keep Maximum SID function keeps the detector in the maximum SID position, to prevent it from hitting objects while performing APC movements. Recalling a stand position may cause a collision. If necessary, stop the recall function and position the stand manually.

3.1.5 Collision Prevention Override

You can override collision prevention function in the following situations.

Smart BodyGuard Override

You can override the BodyGuard function if it is blocking motorized stand movements that may be caused by equipment used around the patient and table, for example ECG cables. This function is

called Smart BodyGuard Override. It is the responsibility of the operator to ensure that collisions with the patient or equipment do not occur while the override function is active.

To activate the Smart BodyGuard Override function after a movement is blocked by the BodyGuard, release the movement switch and reactivate it within 5 seconds.

When you activate the override function, a message is displayed in the status area, and a repeating beep sound can be heard. The maximum movement speed during override is reduced compared to normal movements. The override function is deactivated and normal movements are available again if the requested movement is no longer being limited by the BodyGuard sensor.

NOTE ***Smart BodyGuard Override is a configurable function and it may not be enabled on every system***

Table Height Collision Override

If you need to perform CPR, you can override the force sensor that stops table height and tilt movements.

The table is equipped with a force sensor measuring the force vertically applied to the surface of the tabletop. Normally the measured force is determined by the patient weight. During motorized movement, if a collision force exceeding the safety threshold is detected, the movement stops and is briefly reversed.

To override the force sensor, release the table tilt switch or table height switch and then re-apply the switch movement within 5 seconds to continue the movement. If no switch movements are performed within 5 seconds, override mode is deactivated and table movements are stopped.

NOTE ***There are no audible signals during table height collision override mode.***

3.1.6 Intelligent Collision Protection

Intelligent Collision Prevention (iCP) prevents collisions between the tabletop, the X-ray tube, and the stand. In a biplane system, iCP also prevents collisions between the frontal stand and the lateral stand.

When the distance between the tabletop and stand becomes too small, a collision is prevented by stopping motorized stand movements (except for motorized detector shift movement).

The iCP function allows you to resume movement and decrease the distance between the table and stand in a controlled way:

- A small movement step is made when the calculated distance decreases further during the movement.
- When the calculated distance remains the same during the movement, the movement continues at reduced speed.
- When the calculated distance increases during the movement, the movement continues at normal speed.

To prevent the risk of pinched fingers for the patient, motorized tabletop movements stop at a distance of at least 2.5 cm between the stand and the tabletop. This is applicable for patients up to the maximum patient weight on the table, except during motorized movement in override mode.

Tabletop - X-ray Tube Clearance

The iCP function prevents collisions between the X-ray tube and the tabletop. To allow steep angle projections, iCP does not prohibit movements of the stand or table when the clearance between the X-ray tube and the bottom side of the tabletop is more than 2 cm (except for the area at the tip with a risk of pinched fingers).

Stand - Table Clearance (XY)
The iCP function prevents collisions between the stand and the table. Ensure that no part of the patient can become jammed between the stand and tabletop and that the stand does not collide with the tabletop during motorized movement of the stand. When the stand is positioned away from the stored position, the L-arm may rotate during position recall movements, and there is a possibility that it may hit the tabletop.

Stand - Airflow Channel Clearance (XY)
The iCP function prevents collisions between the stand and the airflow channel. The position of the stand (propeller or roll angle) is taken into consideration.

3.1.7 Patient Table

The patient table allows you to position the patient in several different ways to suit the procedure that you are performing.

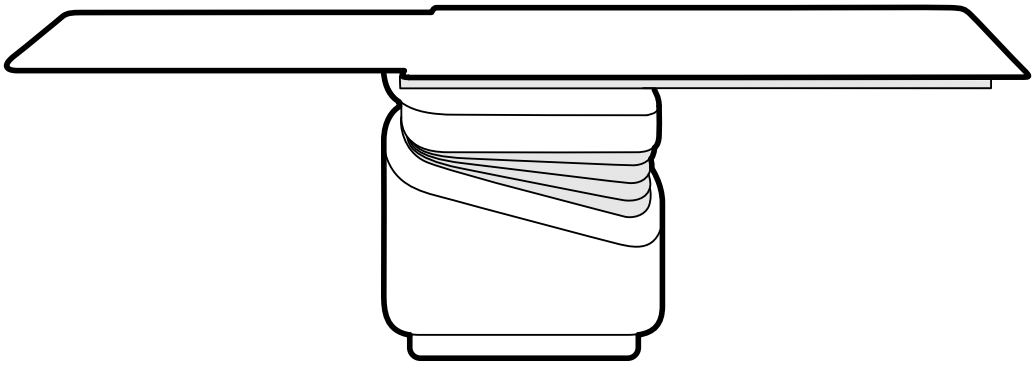

Figure 6 Patient table

Available movements depend on the type of table and the configured options:
- Manual or motorized tabletop float for longitudinal and lateral movements
- Height adjustment
- Tilting (when the table is tilted, longitudinal float movements are motorized, while lateral movements can still be performed manually)
- Cradling
- Pivoting
- Swiveling

Table movements are controlled using the control module. Some of these functions may not be available on your system. For more information, see *Positioning the Table* (page 63).

The patient table has an accessory rail that is used to mount additional equipment such as the control module, touch screen module, and radiation shields.

The maximum permissible weight on the tabletop is 275 kg (600 lbs). This includes the weight of all accessories that are attached to the tabletop.

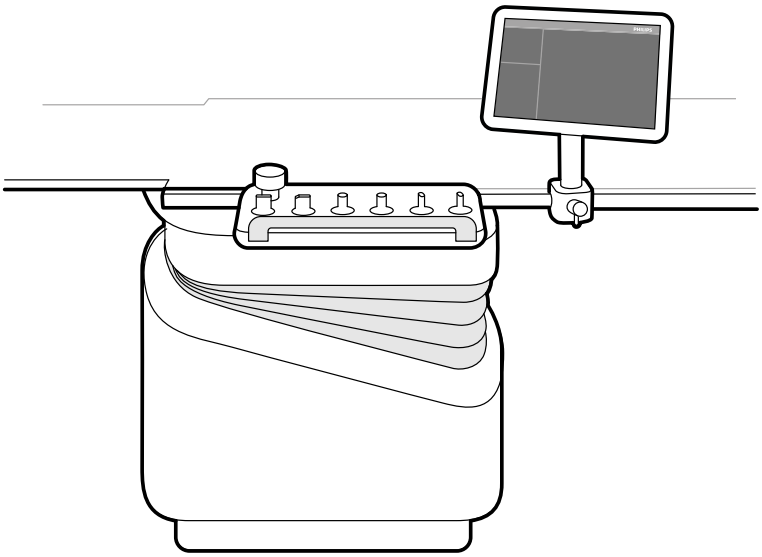

Figure 7 Control module and touch screen module on the accessory rail

3.1.8 Control Module

The control module provides the controls required to adjust the position of the table and stand, and to perform image functions during acquisition.

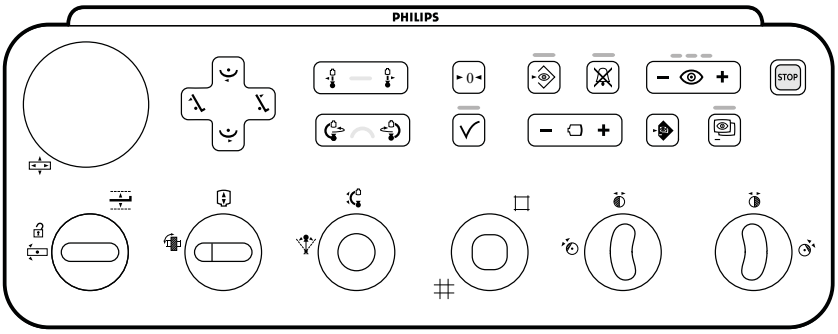

Figure 8 Monoplane control module

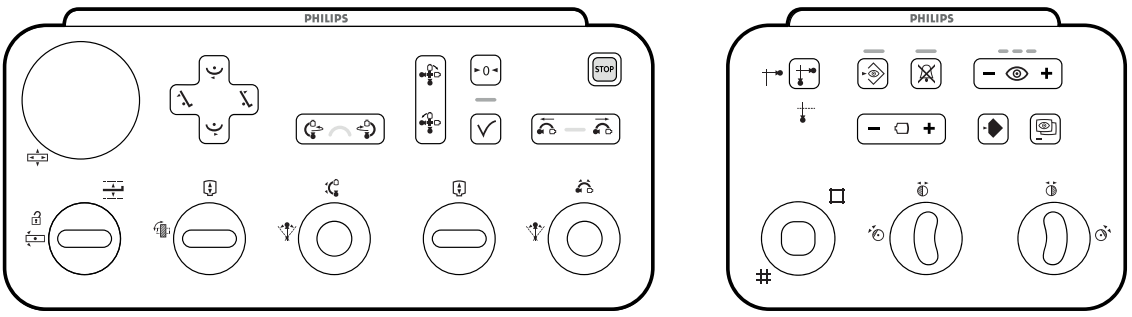

Figure 9 Biplane control modules: geometry control module (left) and imaging control module (right)

Up to three control modules can be used with each system.

- The control module at the tableside in the examination room can be attached to the accessory rail in three positions: doctor side, nurse side, and foot end.
- The second control module in the examination room can be mounted on a pedestal (optional). The pedestal can be positioned at the doctor side, nurse side, foot end, or head end of the table.
- A third (optional) control module can be located in the control room.

The functions that are available on the control module and the layout of controls depend on the options installed on your system.

For more information, see *Monoplane Control Module* (page 413) or *Biplane Control Modules* (page 415).

3.1.9 Touch Screen Module

You can use the touch screen module to control acquisition settings and select images for review or post-processing.

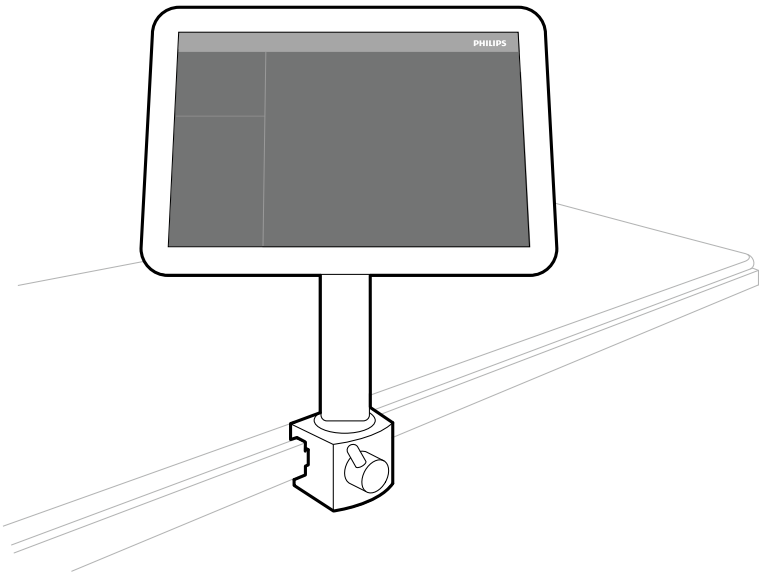

Figure 10 Touch screen module in the examination room

You can control system functions using the touch screen. Depending on the active procedure or the system configuration, some functions may not be available.

Up to three touch screen modules can be used with each system.

- The touch screen module at the tableside in the examination room can be attached to the accessory rail in three positions: doctor side, nurse side, and foot end.
- The second touch screen module in the examination room can be mounted on a pedestal (optional). The pedestal can be positioned anywhere in the examination room.
- A third (optional) touch screen module can be located in the control room.

If you are using multiple touch screen modules, the following rules apply:

- You can use different applications on each touch screen module.
- If you use the same application on multiple touch screen modules, the modules are fully linked.

For more information, see *Touch Screen Module* (page 397).

3.1.10 Monitor Configuration

For a monoplane system, there is always at least one monitor in the examination room that displays live and reference images. For a biplane system, there are always at least two monitors, and the live images for the frontal and lateral channels are always synchronized and displayed side by side. Additional monitors to display reference images can be configured at installation.

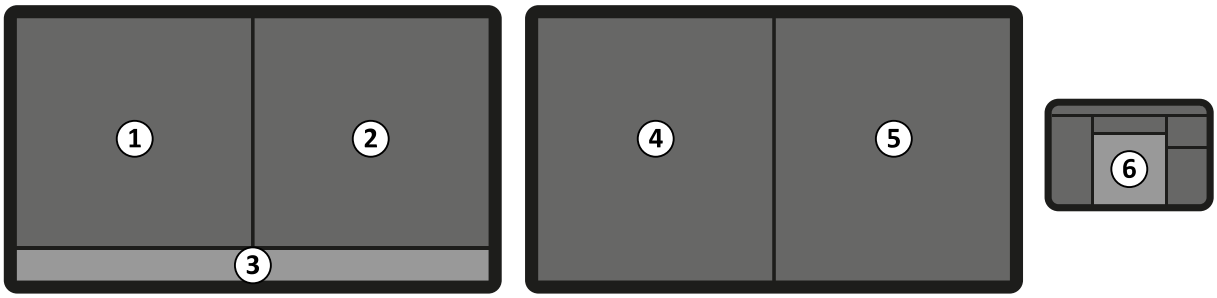

Figure 11 Standard monitor layout in the examination room

Legend			
1	Live view	4	Reference 2 view
2	Reference 1 view	5	Reference 3 view
3	Status bar	6	Touch screen module

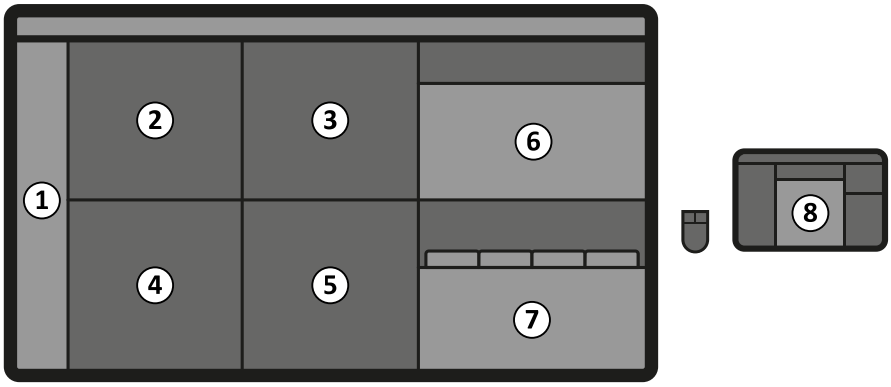

Figure 12 FlexVision (option) layout in the examination room

Legend			
1	Status bar	5	Application view
2	Reference 1 view	6	Application workstation
3	Reference 2 view	7	X-ray workstation
4	Live view	8	Touch screen module

Monitors are mounted within a monitor ceiling suspension unit. For more information, see *Positioning the Monitor Ceiling Suspension* (page 62).

NOTE ***When a third-party video source has no patient identification, the hospital should have a procedure in place to assess the video feeds on the large screen without the risk of mixing up patient data.***

Switchable Monitors (Option)

The switchable monitors option allows you to manage up to 16 displays in the examination room and display video and applications originating from the Azurion system and up to 11 video sources from auxiliary systems.

You can choose what is displayed on each monitor using the touch screen module. For more information, see *Using Switchable Monitors* (page 96).

FlexVision (Option)

If the FlexVision option is installed, individual monitors on the monitor ceiling suspension are replaced by a single large monitor that displays all applications.

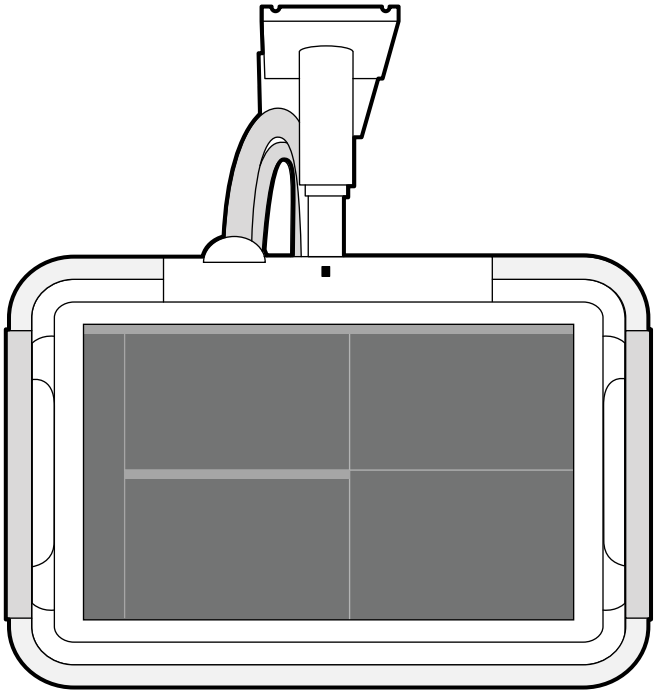

Figure 13 Monitor ceiling suspension with FlexVision

The monitor displays applications in windows. You can choose which applications to display in each window and select different preset layouts according to your workflow. For more information, see the following sections:

- *Selecting a Different Preset for FlexVision* (page 94)
- *Managing Presets for FlexVision Using the Touch Screen Module* (page 222)

NOTE ***When third-party video sources are too bright (for example, ultrasound), you can reposition the third-party video feed on the large screen.***

3.1.11 Foot Switch

You can control fluoroscopy and exposure using the foot switch.

The function assigned to each pedal on the foot switch is configured when your system is installed.

Monoplane Foot Switch

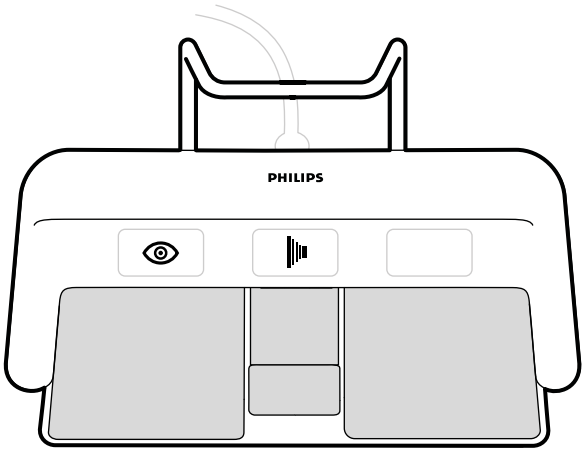

Figure 14 Monoplane foot switch

Depending on how your system is configured, three of the following functions may be assigned to the monoplane foot switch.

Symbol	Function	Symbol	Function
	Perform fluoroscopy	1×	Prepare and perform single-shot exposure
	Prepare and perform exposure		Switch the room light on and off

Biplane Foot Switch

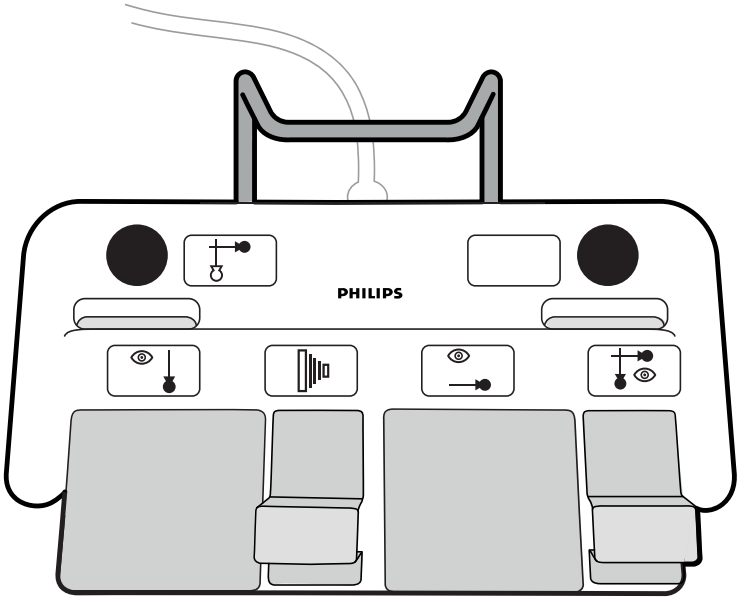

Figure 15 Biplane foot switch

Depending on how your system is configured, six of the following functions may be assigned to the biplane foot switch.

Symbol	Function		
	Select channel		Prepare and perform exposure
	Perform fluoroscopy on the frontal channel	1×	Prepare and perform single-shot exposure
	Perform fluoroscopy on the lateral channel		Switch the room light on and off
	Perform biplane fluoroscopy		

Additional Foot Switch

If an additional foot switch is available, it provides the same functions as the standard foot switch. X-ray can be started from either foot switch in the examination room.

Wireless Foot Switch (Option)

A wireless foot switch option is available. For more information, see *Wireless Foot Switch (Option)* (page 201).

3.1.12 Hand Switches

The system has three hand switches, each controlling different functions.

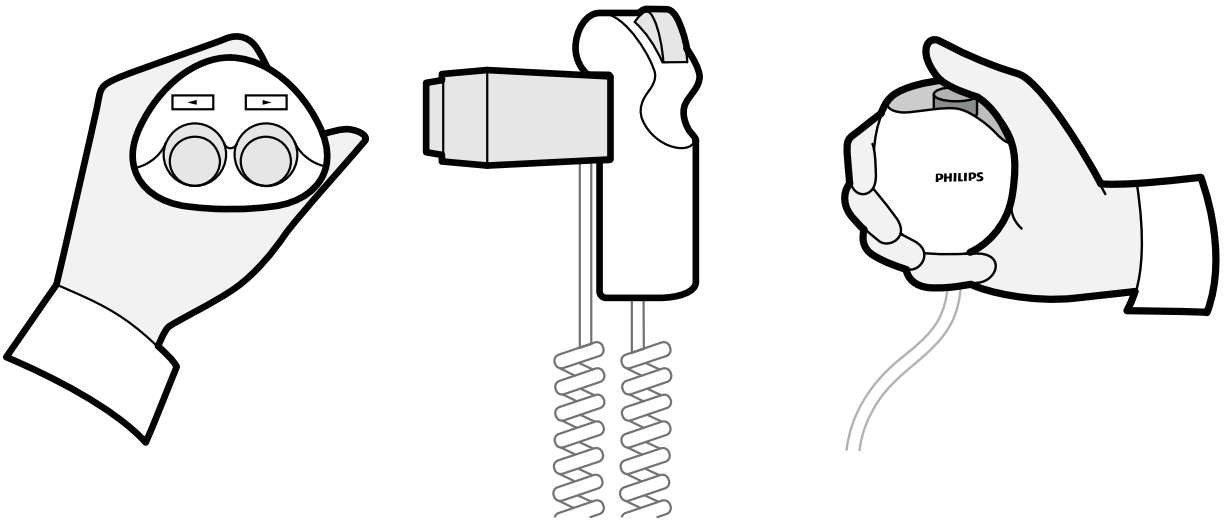

Figure 16 Swivel hand switch (left), speed controller (middle), exposure hand switch (right)

Swivel Hand Switch

You use the swivel hand switch to swivel the table towards the head end or towards the foot end.

Speed Controller

You use the speed controller to control the speed of longitudinal table movements when acquiring images for Bolus Chase Reconstruction.

The speed controller is automatically enabled when you select an X-ray protocol for bolus chase. You control the table speed by pressing the trigger. The more you press the trigger, the faster the table moves.

Exposure Hand Switch

You use the exposure hand switch to control the exposure function. The hand switch has a single button that you press in two stages:

- Pressing the button to the first stage prepares the system for exposure.
- Pressing the button to the second stage activates exposure.

3.1.13 Viewpad

The viewpad is a handheld remote control that you can use to control viewing functions on the system.

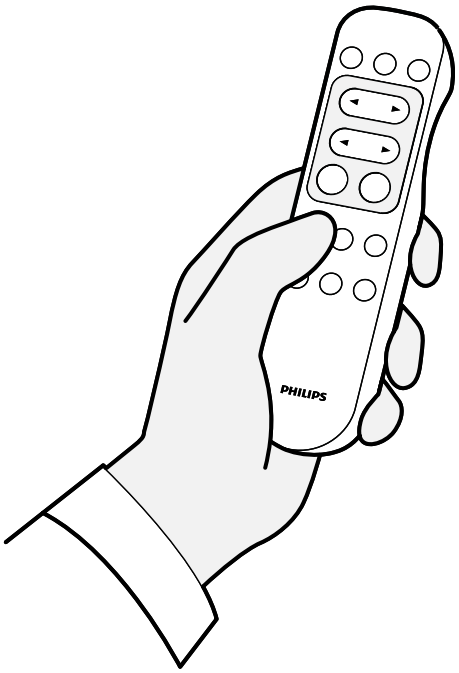

Figure 17 Viewpad

Two different versions of the viewpad are available: standard and vascular. The vascular viewpad has additional functions. For more information, see *Viewpad* (page 419).

The viewpad is an infrared remote control. The infrared transmitter is located on the front of the viewpad. If the transmitter is obstructed, signals are not transmitted. The receiver is located in the monitor ceiling suspension, above the monitors. A light on the receiver indicates that the selected command has been received. The viewpad will function inside a transparent sterile cover.

The viewpad is battery-powered. For more information about replacing the batteries, see *Replacing Batteries* (page 257).

When not in use, store the viewpad in the holder provided on the side of the touch screen module.

NOTE ***Do not open the cover of the viewpad (not including the battery compartment cover). For maintenance, contact your technical support. If cover is damaged, do not use the viewpad and call technical support for a replacement.***

NOTE ***Do not use the viewpad when more than one Azurion system is in use in the same room.***

NOTE ***Infrared signals from the viewpad may interfere with other infrared-controlled equipment in the same room. Before using the viewpad in a procedure, check that there is no interference with other equipment.***

A laser pointing device is located on the front of the viewpad. You can use this device to point at images on the monitors. The quality of the laser pointer spot on the monitors is affected when using a sterile cover.

NOTE ***Do not point the laser into people's eyes, as there is a risk of injury.***

3.1.14 Mouse and Mouse Table (Option)

An optional mouse is available in the examination room to assist with operating the system. You use the mouse with a mouse table mounted on the table accessory rail.

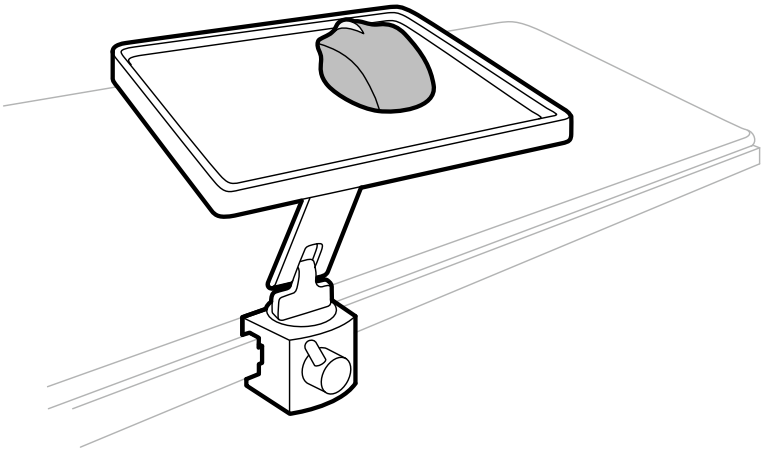

Figure 18 Mouse and mouse table (option)

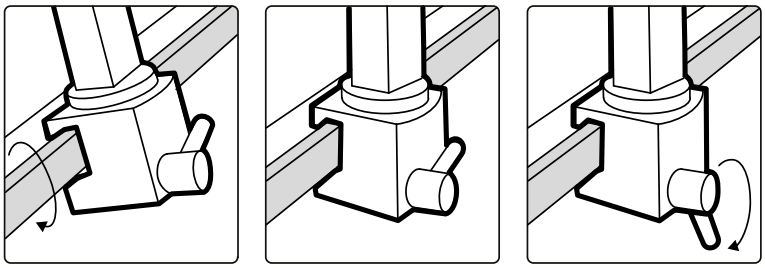

Figure 19 Attaching the mouse table to the accessory rail

3.1.15 Sterile Covers

Sterile covers are available for the table, stand, and touch screen module. We recommend that you use sterile covers to prevent contamination of the system and maintain a sterile environment. It is the responsibility of the hospital to supply and fit sterile covers when needed.

3.2 Equipment in the Control Room

The control room usually contains two monitors that display the acquisition window and the review window.

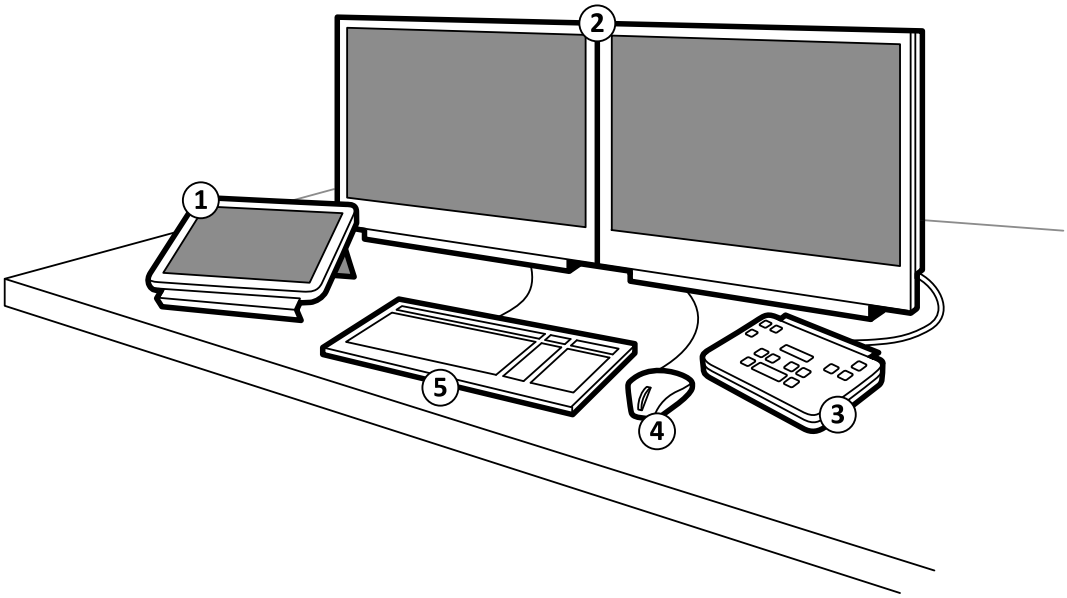

Figure 20 Equipment in the control room

Legend			
1	Touch screen module	4	Mouse
2	Monitors	5	Keyboard
3	Review module		

The acquisition window displays live X-ray images and is used to change procedure settings, and to schedule procedures. When acquisition is not being performed, you can use this monitor to perform other tasks such as reviewing images and post-processing.

The review window allows you to work with studies and series from any patient. While acquisition is being performed in the examination room, you can use the review window in the control room to work in parallel and perform tasks such as reviewing and post-processing, for any study, including studies and series that do not relate to the acquisition patient. For more information, see *Instant Parallel Working* (page 119).

The control room may also contain additional equipment and workspots:
- Touch screen module
- Review module
- FlexSpot (option)
- Additional FlexSpot (option)
- Slave monitors (up to a maximum of three)

3.2.1 Review Module

The review module is located in the control room and provides controls for reviewing images in the acquisition window.

You can also perform some general functions using the review module, for example, switching the system on and off, disabling radiation, disabling geometry movements, and resetting the fluoroscopy buzzer.

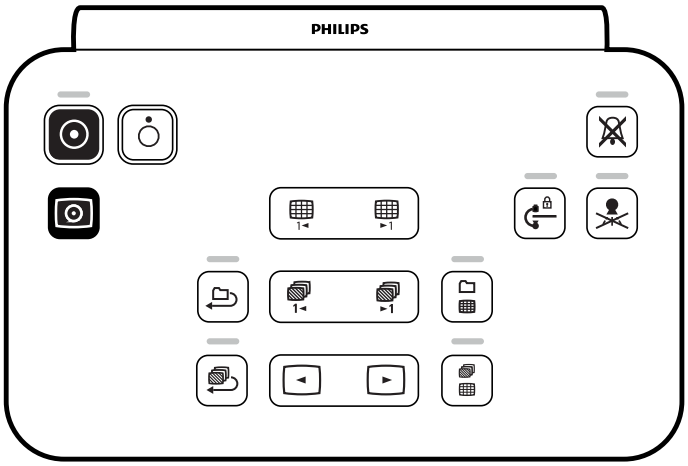

Figure 21 Review module

For more information, see *Review Module* (page 417).

3.2.2 Touch Screen Module

An optional touch screen module can be installed in the control room.

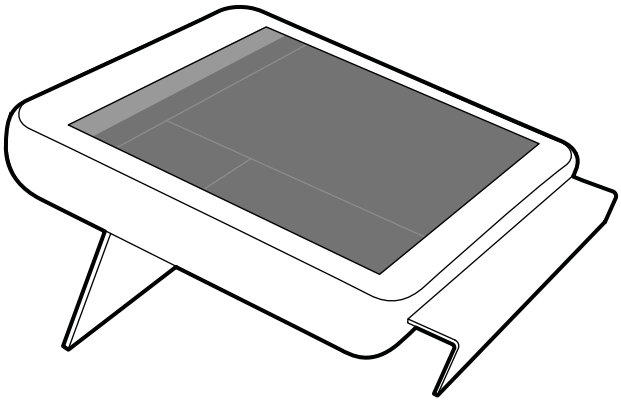

Figure 22 Touch screen module in the control room

You can control system functions using the touch screen. Depending on the active procedure or the system configuration, some functions may not be available.

Up to three touch screen modules can be used with each system.

- The touch screen module at the tableside in the examination room can be attached to the accessory rail in three positions: doctor side, nurse side, and foot end.
- The second touch screen module in the examination room can be mounted on a pedestal (optional). The pedestal can be positioned anywhere in the examination room.
- A third (optional) touch screen module can be located in the control room.

If you are using multiple touch screen modules, the following rules apply:

- You can use different applications on each touch screen module.
- If you use the same application on multiple touch screen modules, the modules are fully linked.

For more information, see *Touch Screen Module* (page 397).

3.2.3 FlexSpot (Option)

If the FlexSpot option is installed, the monitors in the control room are replaced by up to two larger wide-screen monitors (called the primary and secondary monitors) that are capable of displaying multiple applications.

For more information, see *FlexSpot (Option)* (page 393).

3.2.4 Additional FlexSpot (Option)

Additional FlexSpot is an extension to the FlexSpot option, consisting of an additional wide-screen monitor, mouse, and keyboard, located either in the control room or the examination room.

The interface is identical to FlexSpot with the following exceptions:

- Only one application can be displayed at a time.
- In the menu bar, only the application selector and the keyboard lock icons are available.
- The status area can be hidden to make the main display area larger.

4 Starting and Stopping the System

This section provides information about starting and stopping the system during normal use.

For information about stopping the system in an emergency, see *Emergency Stop* (page 19).

4.1 Starting the System

1 On the review module, press and hold **Power On** for 2 seconds.

NOTE ***Avoid operating any of the controls while the system is powering on, as this may inhibit the start-up process.***

2 Release the button when the indicator begins to flash.

The indicator light stays on when the start-up process is complete.



Figure 23 System startup screen

The system takes 5 minutes from switching on until all functionality is available.

3 If your work schedule includes tasks performed on a separate workstation, switch the workstation on and log on to it to avoid a delay during the procedure.

4 When the logon screen appears, enter your user name and password, and then select **Log On** or press Enter.

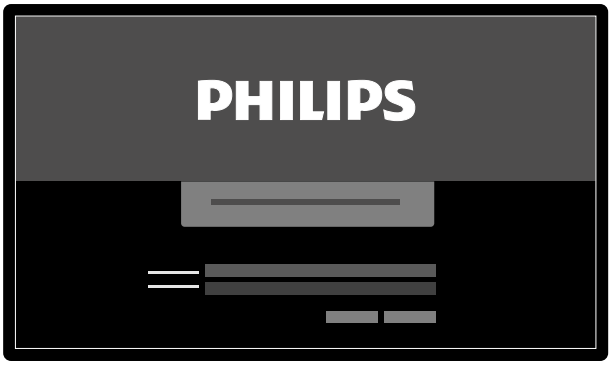

Figure 24 Logon screen

If your password has expired, a dialog box is displayed allowing you to change your password. You are asked to enter your existing password and to set your new password.

4.1.1 Accessing the System in an Emergency

Depending on the system configuration, you can access the system in an emergency without logging on.



1 If the system is not switched on, press and hold **Power On** on the review module until the indicator light stops flashing.

2 In the logon screen, click **Emergency**.

The system is available in emergency access mode. This mode allow you to perform an emergency procedure, but has reduced functionality.

For information about configuring the system to allow emergency access, see *Managing Users and System Logon* (page 233).

4.1.2 Switching On Only the Monitors (Option)

This option allows you to use the monitors without switching the X-ray system on. You can then view images or perform a procedure that does not involve the system, such as ultrasound.

This option is available if your system has the FlexVision or FlexSpot option installed, along with the switchable monitors option.



- Press **Video Only** on the review module for at least 2 seconds.

  The monitors are switched on and the mouse is available for configuring the screen layout.

4.2 Restarting the System

NOTE ***If control of the system starts to deviate from its expected behavior, you should restart the system.***

There are two methods for restarting the system.

- Warm restart: Use this method when you are trying to resolve a software-related issue with the system. This is the standard method for restarting the system.
- Cold restart: Use this method when you are trying to resolve a hardware-related issue with the system.

We recommend that you perform a cold restart of the system every day. During a cold restart important data is saved, which assists with remote servicing.

If you stop the system using the emergency **STOP** button, you must restart the system before you can use it again. For more information, see *Emergency Stop* (page 19).

- To perform a warm restart, do the following:



  a On the review module, press and hold **Power On**.

  b Release the button when the indicator light begins to flash.

  A warm restart takes 90 seconds until the system is fully functional. Fluoroscopy is possible after 60 seconds.

- To perform a cold restart, do the following:



  a On the review module, press and hold **Power Off**.

  b Release the button when the indicator light begins to flash.

c After the system has completely shut down, wait 10 seconds.



d On the review module, press and hold **Power On**.

NOTE ***Do not operate any of the controls while the system is powering on, as this may inhibit the start-up process.***

A cold restart of the system takes 6 minutes from initiation of the cold restart until all system functionality is available.

4.3 Mains Power Failure

In the event of a mains power failure, the system behaves as follows:
- All stored patient and system data is preserved.
- All mechanical, non-balanced movements are blocked.

When the hospital's back-up power system is active, the system takes measures to conserve power. Functions that cause high power consumption are disabled. Low-load fluoroscopy is still possible, as well as patient and beam positioning functions. This ensures that you can always free the patient from the system.

NOTE ***The last acquired run may be lost if the power failure occurs during the acquisition, or shortly after the run was acquired.***

The system has an option to power the system using an uninterruptible power supply. Please contact technical support for details.

4.3.1 Uninterruptible Power Supply (Option)

The system is powered via the hospital mains power supply. The stability of the mains power supply may vary over time and can sometimes be interrupted.

When the power supply is interrupted, the system stops. If this happens during a clinical procedure, you should do one of the following:
- Transport the patient to another system to continue the procedure.
- Wait until the hospital mains power supply is restored, and then restart the system to continue the procedure.

To reduce the impact of interruption to the power supply, the hospital can place an uninterruptible power supply between the hospital mains and the system. An uninterruptible power supply allows you to safely cancel or complete an ongoing procedure, if possible. When the hospital mains power supply is interrupted or restored, the system does not need to be restarted and any procedures in progress are not interrupted.

The following types of uninterruptible power supply are available:
- Full uninterruptible power supply, which allows the system to continue with full functionality for at least 15 minutes.
- Low-load uninterruptible power supply: which allows the system to continue with low-load fluoroscopy for at least 15 minutes. Exposure is not possible and image quality is reduced.

Alternatively, an internal uninterruptible power supply is available as an option that allows the system to perform a controlled shutdown if the hospital mains power supply is interrupted. All data is backed up during the shutdown.

For more information, contact technical support.

4.4 Restarting after Emergency Power Off

Following an emergency power off situation, the system will enter an emergency power off state.

This is indicated by a flashing indicator light above the **Power On** button on the review module.

To restart the system after an emergency power off situation, you must use the following procedure.



1 When the indicator light above the **Power On** button stops flashing, press and hold **Power On** for more than 2 seconds.

4.5 Stopping the System

Switching the system off automatically logs you off. Alternatively, you can log off without switching the system off, and leave the system available for the next operator.



- To log off, select **System** from the menu bar of the review window, and then select **Log Off**.



- To switch the system off, press **Power Off** on the review module for 3 seconds.

5 Preparing a Patient Study

You can schedule and prepare a patient study in advance of a procedure. You select, edit, and start the study from the patient database.

5.1 Patient Database

When you open the patient database, the system automatically retrieves a list of scheduled studies from the system's database.

If configured to do so, the system can also retrieve a list of scheduled studies from the hospital worklist.



You open the patient database by clicking the patient selector in the upper left corner of the acquisition window or the review window.



Figure 25 Patient database

Legend	
1	List selector
2	Patient list
3	Study details

Use the list selector to filter the studies displayed in the patient list.

Icon	Label	Description
	**In Progress**	Displays the details of the study currently in progress
	**Scheduled**	Displays studies scheduled in the database
	**Suspended**	Displays studies that have been started but not completed
	**Completed**	Displays studies that have been completed

Icon	Label	Description
	All Patients	Displays all studies in the database

You can sort the patient list to make studies easier to find.

- Clicking on each column heading sorts the column in ascending order.
- Clicking on the column heading again, sorts the same column in descending order. An arrow in the column heading indicates that a column has been sorted and in which order (ascending or descending).

You can change the order columns are displayed in by dragging a column heading to a new location.

You can also show or hide columns by right-clicking on any column heading and selecting the columns to show or hide.

If you select **All Patients**, the status of each study is displayed using icons.

Icon	Status	Description
	Scheduled	The procedure is scheduled and has not been started.
	In progress	The procedure has been started and is the current acquisition study.
	Suspended	The procedure has been started but was not completed, and is not the current acquisition study. You can resume the procedure at an appropriate time.
	Completing	The procedure has been completed but some automatic processes, data transfers, or storing activities may still be underway in the background.
	Completed with an error	The procedure has been completed but some errors were encountered. To find out more information about the errors, use the job viewer.
	Completed	The procedure has been completed and all automatic processes, data transfers, or storing activities were successfully carried out.
	Imported	The study has been imported from the archive.
	Importing	The study is currently importing from the archive.
	Imported with errors	The study was imported from the archive but errors were encountered. To find out more information about the errors, use the job viewer.

NOTE ***If an automatic transfer of data fails while a procedure is completing, the procedure's status may remain as Completing. To find out more information about why completion may have failed, use the job viewer.***

For more information, see *Viewing System Tasks in the Job Viewer* (page 156).

Quick Search



A search box is available above the patient list, allowing you to search the patient database.

Search results appear automatically as you enter search text. The search is not case-sensitive.



When you enter search text, the icon changes to allow you to clear the search text if desired. You can clear the search text by clicking **Clear**.

5.2 ProcedureCards

A ProcedureCard is a digital card that contains predefined procedure settings such as acquisition protocols, patient orientation, and imported documents for procedure instructions.

If your system has the FlexSpot or FlexVision option installed, ProcedureCards also contain predefined screen layouts.

The system provides predefined ProcedureCards that are divided into procedure groups. You can also create your own ProcedureCards and save them in your own groups.

ProcedureCards provide the following information to the system:
- The default X-ray settings for use in the study.
- The X-ray setting selections that are available to you during the study.
- The desired patient orientation.
- The default preset for FlexVision.
- The default preset for FlexSpot.
- Guidance notes for the study.

For more information, see the following sections:
- *Preparing a Patient Study* (page 49)
- *Managing ProcedureCards* (page 246)

5.3 Scheduling a Study from the Hospital Worklist

If the patient that you are scheduling a study for is not displayed in the worklist, you can search for the patient in the hospital worklist.



1 Click the patient selector in the upper-left corner of the review window or the acquisition window to display the patient database.

2 Do one of the following:



- Click **Scheduled** to see the list of scheduled procedures.



- Click **All Patients** to see all procedures in the local database.



3 Click **Add from Worklist**.

4 To find a patient in the worklist, do one of the following:



- Enter the patient's surname, patient ID, or accession number, and click **Search**.
- To display a list of all patients in the worklist scheduled for this system, leave the fields blank and click **Search**.

If the patient you are searching for was scheduled to be examined on another system, you may need to search again using different **Station AE-Title** and **Modality** values.

If you cannot find the patient in the worklist, you may need to add the patient manually. For more information, see *Scheduling a Study Manually* (page 52).

You can change the ProcedureCard selected for the study by editing the study. For more information, see *Editing a Scheduled Study* (page 53).

5 Select the patient in the patient list.

6 Click **Add to Schedule**.

When you schedule a study from the hospital worklist, the ProcedureCard is automatically selected based on the DICOM RIS code recorded for the study in the hospital worklist. For more information, see *Mapping RIS Codes to ProcedureCards* (page 237).

5.4 Scheduling a Study Manually

You can schedule a study for a patient who is not available in the worklist.



1 Click the patient selector in the upper-left corner of the review window or the acquisition window to display the patient database.

2 Do one of the following:



- Click **Scheduled** to see the list of scheduled procedures.



- Click **All Patients** to see all procedures in the local database.



3 Click **Add Patient**.

4 Enter the patient's details.

5 Enter the details of the study in the **Study Details** tab.

If you select **Auto** in the **Patient Type** box, the system automatically selects an appropriate patient type based on the patient's height and weight.

6 Click the **Procedures** tab.

7 Select the appropriate **ProcedureCard Group** from the drop-down list.

8 Select the required ProcedureCard.

If you do not select a ProcedureCard, the default ProcedureCard is used. For more information, see *Changing the Default ProcedureCard* (page 247).

9 Do one of the following:

- To add the procedure to the schedule list without starting the procedure yet, click **Add to Schedule** in the review window or the acquisition window.



- To add the procedure to the schedule list and start the procedure immediately, click **Start Procedure** in the acquisition window.

5.5 Adding a Study

You can add a new study to a patient in the worklist if a patient is undergoing a repeat study.



1 Right-click the patient in the worklist and then click **Add Study** in the shortcut menu.

The **Add Patient** dialog box is displayed, with the patient's demographic information already inserted.

2 Enter the details of the study in the **Study Details** tab.

If you select **Auto** in the **Patient Type** box, the system automatically selects an appropriate patient type based on the patient's height and weight.

3 Click the **Procedures** tab.

4 Select the appropriate **ProcedureCard Group** from the drop-down list.

5 Select the required ProcedureCard.

If you do not select a ProcedureCard, the default ProcedureCard is used. For more information, see *Changing the Default ProcedureCard* (page 247).

6 Do one of the following:



- To add the procedure to the schedule list without starting the procedure yet, click **Add to Schedule** in the review window or the acquisition window.
- To add the procedure to the schedule list and start the procedure immediately, click **Start Procedure** in the acquisition window.

5.6 Editing a Scheduled Study

You can edit a scheduled study to change or add details, or to change the ProcedureCard.



1 Click the patient selector in the upper left corner of the acquisition window or the review window.



2 Select the patient in the patient list and click **Edit**.

3 To change or add details, use the **Study Details** tab.

If the study was imported from the hospital worklist, you can only change information about the patient type, size and weight. For more information about importing studies from the hospital worklist, see *Scheduling a Study from the Hospital Worklist* (page 51).

4 To change the ProcedureCard, use the **Procedures** tab.

If you change the ProcedureCard, the settings associated with the new ProcedureCard selected are applied to the system when you select the study for acquisition.

5 Click **Save** to save your changes.

Alternatively, click **Back to Schedule** to return to the patient database without saving your changes.

5.7 Checking the Available Disk Storage Space

Before starting a study and acquiring images, you should check that the system has sufficient storage capacity.

You can check the available storage capacity by looking in the notification area. The following icons indicate the status of the storage disk.

Icon	Status
	The storage disk has capacity. Position the pointer over the icon to see the percentage of the disk space available.
	Available disk space is low. Unprotected studies may be overwritten. You should delete studies or export important data to an appropriate location to create more space.
	Available disk space is critically low. You may not be able to store the study. You should delete studies or export important data to an appropriate location to create more space.

On biplane systems, storage capacity is indicated for each channel.

For more information about protecting or archiving important data, see the following sections:

- *Protecting and Unprotecting Studies* (page 122)
- *Exporting Data* (page 149)

5.8 Starting a Study

If a study has been scheduled, you can select it and start it.

You can only start a study from the acquisition window.



1 Click the patient selector in the upper-left corner of the acquisition window.



2 Click **Scheduled** to see the list of scheduled studies.

If the patient or study is not displayed in the list of scheduled studies, you may need to search the hospital worklist or add the patient manually.

For more information, see the following sections:
- *Scheduling a Study from the Hospital Worklist* (page 51)
- *Scheduling a Study Manually* (page 52)



3 Select the patient in the list and click **Start Procedure**.

5.9 Positioning the Patient on the Table

Positioning the patient correctly on the table before sterile preparation prevents the need to reposition the patient during the study.

NOTE ***Disable geometry movements and X-ray while performing the following actions:***
- ***Positioning the patient on the tabletop.***
- ***Removing the patient from the tabletop.***
- ***Preparing the patient for the procedure.***



The maximum permissible weight on the table is 275 kg / 600 lbs. This includes the weight of all accessories that are attached to the table.

NOTE ***The maximum permissible load of an operating table differs from the standard table. For more information, refer to the Instructions for Use supplied with the operating table.***

1 If the tilt or cradle options are installed, position the tabletop at 0 degrees tilt and 0 degrees cradle.

2 If the pivot option is installed, you can pivot the table to improve accessibility while transferring the patient. To pivot the tabletop do the following:

a Move the tabletop all the way towards the head end (fully extended from the table base) to make it easier to pivot.



b Turn and hold the **Pivot Lock** switch on the control module until the unlock indicator light changes color from white.

The **Pivot Lock** switch delay prevents unintentional unlocking during patient transfer.

c Push the tabletop to the desired pivot position.

There are detent positions at +13 degrees and -13 degrees, or you can pivot the tabletop between +90 degrees and -180 degrees.

d Ensure that the pivot lock is engaged.

The pivot lock engages automatically 10 seconds after the pivot movement. The unlock indicator light switches to white when the pivot lock is engaged.

For more information, see *Pivoting the Table* (page 65).

3 Move the tabletop all the way towards the foot end (fully retracted toward the table base).

4 Raise or lower the tabletop to a convenient height for transferring the patient.

5 Remove control modules and the radiation shield if they are attached to the accessory rail between the trolley and the tabletop.

You can replace these items after the patient has been transferred.

6 Transfer the patient on to the tabletop and place the patient into the correct position.

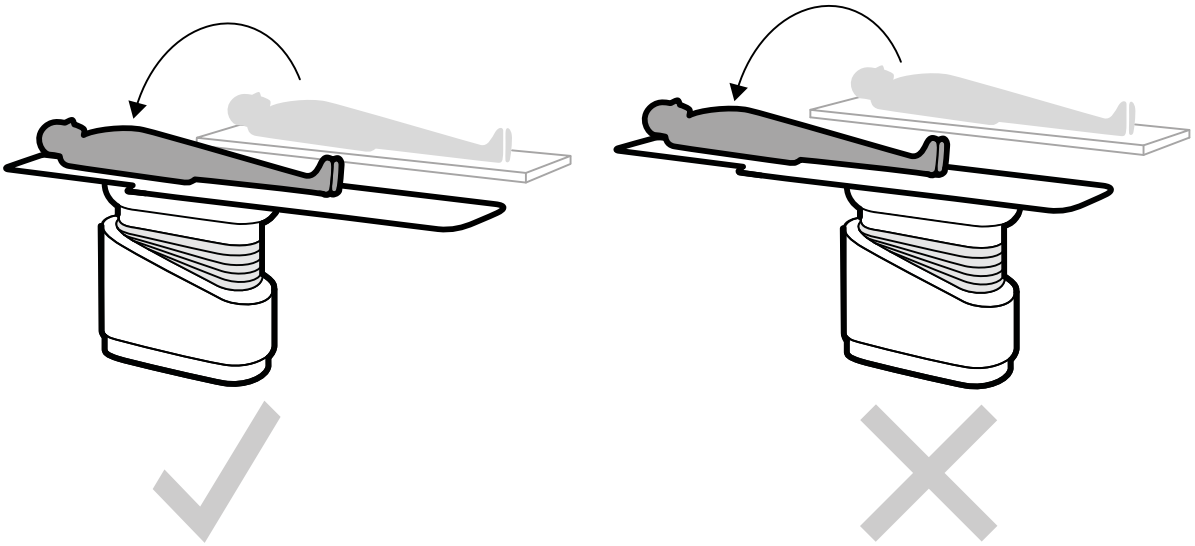

Figure 26 Transfer the patient with the table fully retracted toward the table base

The required patient orientation for the selected ProcedureCard is shown in the **X-ray Settings** task panel. If the patient orientation is different, change the patient orientation in the task panel. For more information, see *Changing the Patient Orientation* (page 57).

NOTE ***Ensure that the patient, the control module, and the touch screen module are positioned in such a way that the patient cannot touch or come in contact with the modules.***

7 If you pivoted the table to transfer the patient, do the following to return the table to the desired procedure position:

a Unlock the pivot lock and pivot the table.

b Ensure that the pivot lock is engaged before continuing with patient preparation.

5.9.1 Using Patient Straps

Use patient straps to ensure patient safety before starting tilt or cradle movements of the tabletop.

If you use sterile sheets to cover the patient, they might obscure the visibility of the straps. If the patient is covered by sterile sheets, check that the patient is secured with straps before starting tilt or cradle movements.

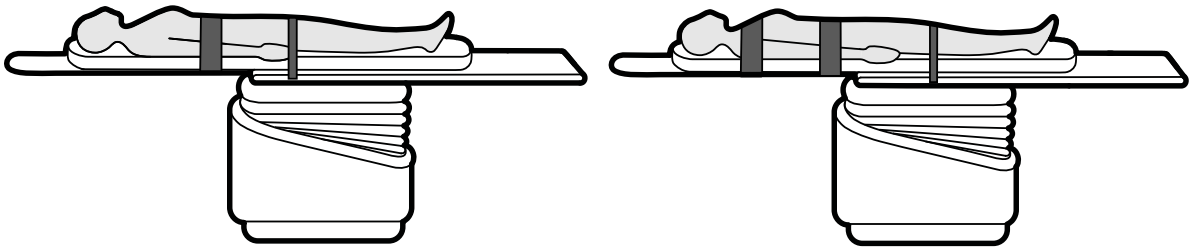

Figure 27 Using patient straps

Ensure that the straps are applied correctly around the accessory rail of the table.

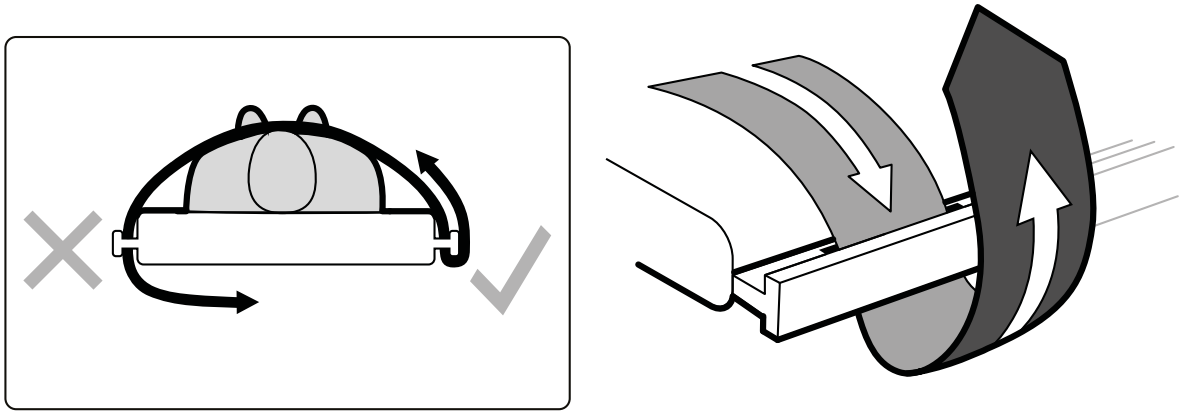

Figure 28 Applying patient straps around the accessory rail

A label showing the correct use of the straps is located on both sides of the table between the strap location holes.



Figure 29 Patient straps label

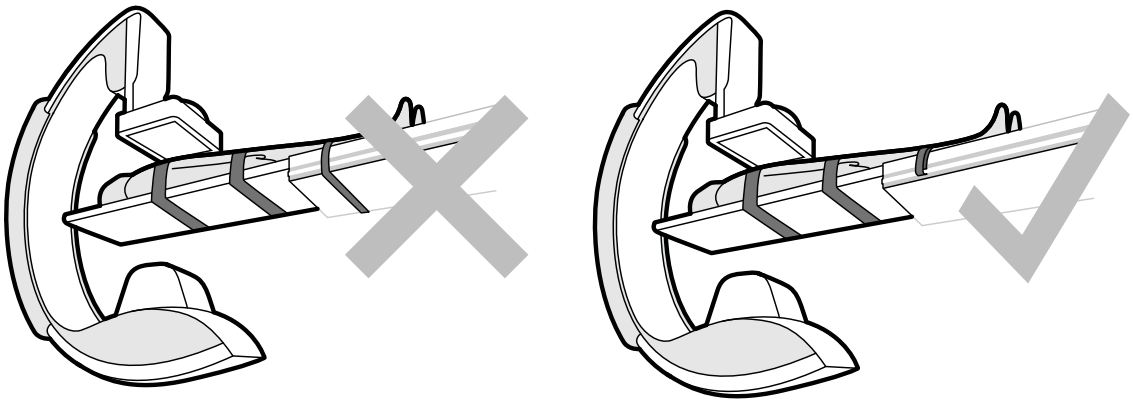

Figure 30 Patient straps: incorrect use and correct use

NOTE ***For patients with disabilities that do not allow the recommended use of straps, it is your responsibility to decide how best to use the tilt or cradle functions while minimizing the risk of harm to the patient.***

5.9.2 Changing the Patient Orientation

The default patient orientation for the procedure is determined by the ProcedureCard. You can change the patient orientation to suit the procedure that you are performing, and to match the patient's actual position on the table.

You can select the following patient orientations:

Symbol	Orientation
	Patient facing up with their head at the head end of the table
	Patient facing up with their head at the foot end of the table
	Patient facing down with their head at the head end of the table
	Patient facing down with their head at the foot end of the table

For more information, see *Image Orientation* (page 94).

You can change the patient orientation using the acquisition window or the touch screen module.

1 To change the patient orientation using the acquisition window, do the following:



a Select the **X-ray Settings** task.

b In the task panel, select the desired **Patient Orientation**.

2 To change the patient orientation using the touch screen module, do the following:



a Select the **X-ray Acquisition** application on the touch screen module.



b Tap the **X-ray Settings** task.

c Tap **Patient Orientation**.

d Select the desired patient orientation.

5.10 Preparing the System

The procedures in this section describe the preferred stand and table positions in relation to the procedure types.

5.10.1 Safety Information

Patient Safety

Ensure that the patient's fingers do not become jammed between the table and C-arm during motorized movement of the stand in the lateral direction.

When moving the detector towards the patient, take care that the detector's front plate does not hit any small objects, such as the patient's nose.

When the patient's arm is positioned on the catheter arm support, ensure that the patient's arm or fingers do not become jammed between the arm support and the C-arm during table or stand movements.

Hospital Staff Safety

While floating the tabletop, ensure that other staff members do not become trapped between the tabletop and other equipment in the examination room.

It is possible to access the longitudinal guiding mechanism from underneath the tabletop. Serious injury may result if any part of the body becomes trapped in the mechanism.

Safety Devices

For information about safety devices for stand and table movements, see *Collision Prevention (BodyGuard)* (page 29).

Unintentional Activation



WARNING

Ensure that unintentional activation of the control module buttons does not occur by the patient, sterile covers, or other means. This can cause serious injury to the patient or any other person.

Foot Switch

Ensure that the foot switch is not unintentionally activated during geometry movement or swivel movement of the table base.

If the foot switch is fitted with a sterile cover, do not fit the cover too tightly. This is to ensure that when one pedal is pressed the cover does not activate other pedals.

Spillage of Liquids
Prevent spillage of liquids, which may bring live parts of the equipment into contact with conductive enclosures or direct contact with the operator, other personnel, or the patient.

5.10.2 Positioning the C-arm

You position the C-arm in the working position using the control module.

The following working positions are available:
- Head side
- Doctor side
- Nurse side

Rotation and angulation movements are motorized with variable speed. The greater the deflection of the switch on the control module, the faster the C-arm moves. For normal operation these speeds are 0 - 25 degrees per second (lower maximum speeds can be configured by technical support). If the stand is not in its working range the maximum speeds are reduced to 8 degrees per second.

The direction of movement is affected by the position of the **Orientation** switch on the underside of the control module. For more information, see *Selecting the Tableside Position for the Control Module* (page 61).

The following procedure assumes the control module is positioned at the doctor side of the table.

Check the table lock status, and lock or unlock the table as appropriate during the procedure. For more information, see *Locking and Unlocking C-arm and Table Movements* (page 92).

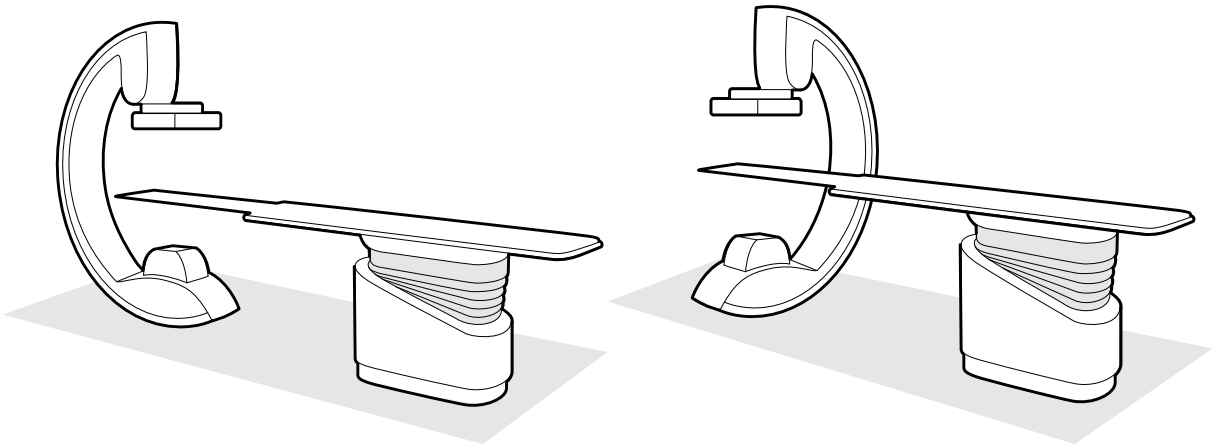

Figure 31 Positioning the C-arm at the head end (left) and nurse side (right)

1 If the table has the tilt option installed, ensure that the table is not tilted.

2 If the table has the pivot option installed, ensure that the table is not pivoted.



3 Set the detector source-to-image distance to the maximum.

4 Place the patient on the table in the desired position.

For more information, see *Positioning the Patient on the Table* (page 54).

5 Move the C-arm to the desired position.

For more information, see *Patient Table: Doctor Side and Nurse Side* (page 425).

6 Move the tabletop into the desired position.

7 Adjust the C-arm rotation and angulation for the required projections.



8 For additional positioning of the region of interest, use table movements.

For more information, see *Isocentering* (page 92).



9 If your system has a rotatable detector, rotate the detector to the desired position (portait or landscape).



10 Move the detector as close as possible to the patient.

5.10.3 FlexMove

FlexMove provides longitudinal and lateral movements for a ceiling-mounted C-arm.

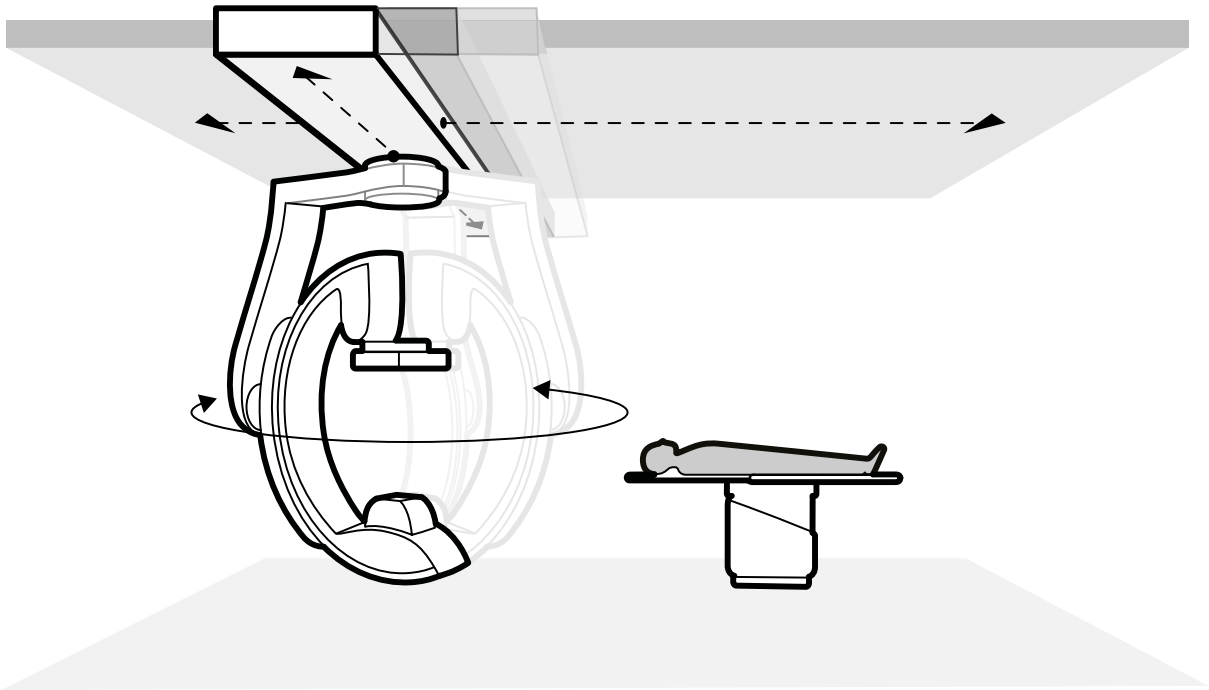

Figure 32 FlexMove geometry

- To perform manual movements, do the following:



  a Press and hold the **Longitudinal/Transverse** movement brake release key on the C-arm stand.

  b Use the handgrips to push or pull the C-arm to the desired position.

  c To stop the movement, release the key.



- To perform motorized movements, use the **Move Beam XY Motorized** switch on the control module.

5.10.4 Control Modules

The control module provides a combination of controls to adjust the position of the stand and table, and to perform imaging functions during acquisition.

You can position the control modules at convenient positions around the table by mounting the modules on the accessory rail.

Do not attach more than two modules to the accessory rail.

Repositioning the Control Module

You can reposition the control module to a more convenient position for the study being performed.

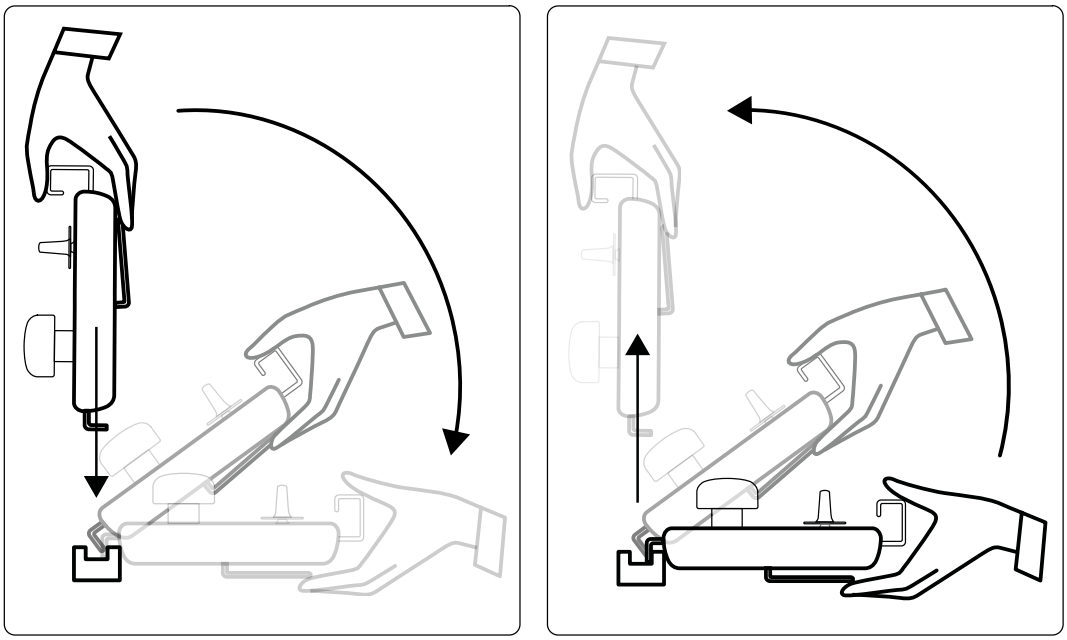

Figure 33 Attaching the control module (left) and removing the control module (right)

1. To remove the control module from the accessory rail, grip it from the front with one hand, with your thumb on top and your fingers on the lock release bar.
2. Press the lock release bar to release the module and lift the module upwards.

   The module can now be lifted off the accessory rail and moved to another position.
3. To attach the control module to the accessory rail, press the lock release bar to open the lock.
4. Place the lock over the accessory rail and push the module down until the back edge of the module housing is flush with the accessory rail, and then release the lock release bar.
5. Ensure that the control module cables are supported by the cable guides.
6. If you repositioned the control module to a different side of the table, you must select the correct tableside position using the **Orientation** switch. For more information, see *Selecting the Tableside Position for the Control Module* (page 61).

Selecting the Tableside Position for the Control Module

To ensure that stand movements remain logical for each position in which the control module can be mounted, the **Orientation** switch located on the under side of the module must be set to the appropriate position.

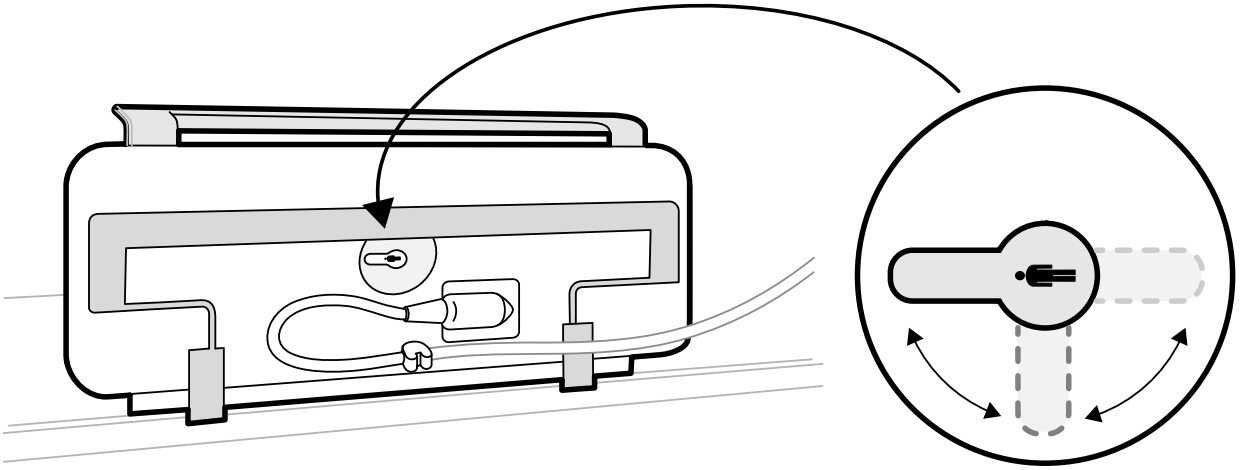

Figure 34 Control module (underside) and **Orientation** switch

The switch must always point towards the head end of the tabletop. For example:

- When mounting the control module on the doctor side, the switch must point to the left.
- When mounting the control module on the nurse side, the switch must point to the right.
- When mounting the control module at the foot end, the switch must point towards the tabletop.

For definitions of table positions, see *Patient Table: Doctor Side and Nurse Side* (page 425).

When the **Orientation** switch on the under side of the control module is in the correct position, the movement of the stand is logical compared to the direction in which the switches are operated.

5.10.5 Positioning the Monitor Ceiling Suspension

WARNING
Do not allow the patient to touch the lower handgrip of the monitor ceiling suspension. It is not an applied part and should not come into contact with the patient.

WARNING
Do not mount any equipment on the lower handgrip of the monitor ceiling suspension that is not regarded as an applied part. For more information, see Applied Parts (page 382).

1 Press and hold the motorized movement buttons to adjust the height of the monitor ceiling suspension.

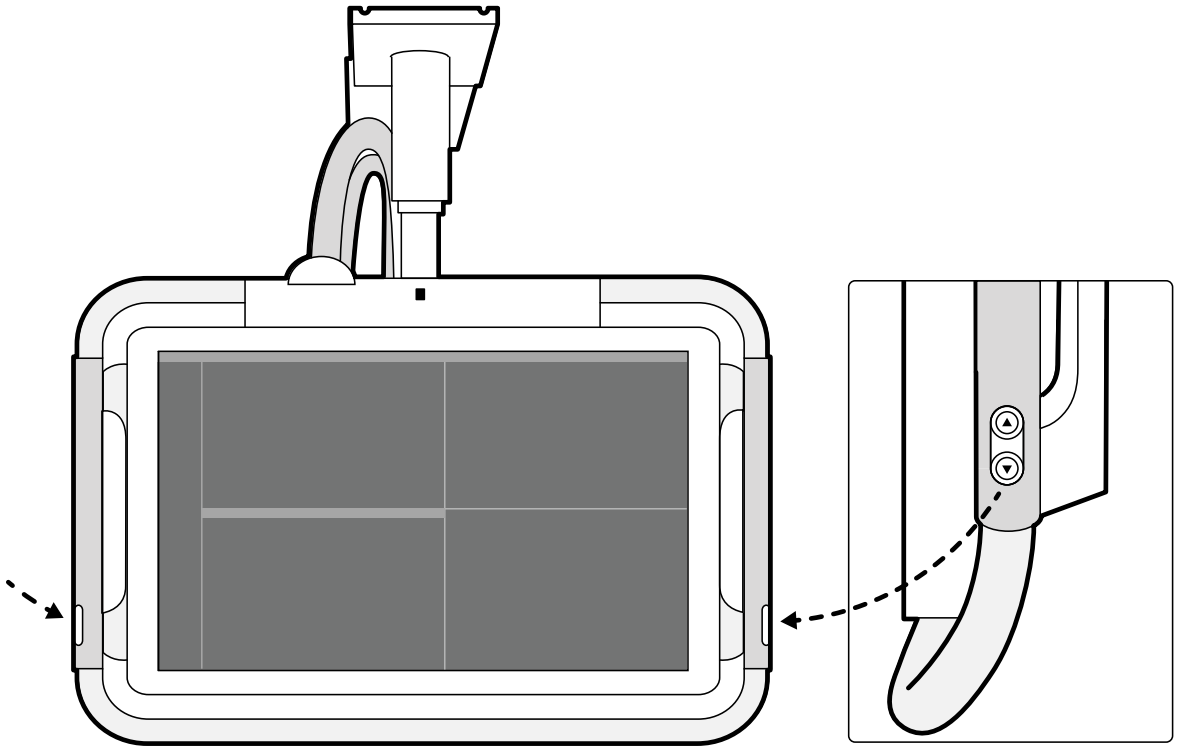

Figure 35 Monitor ceiling suspension height movement buttons

2 Push or pull the handgrip to adjust the X and Y position of the monitor ceiling suspension.

3 Push or pull the handgrip to rotate the monitor ceiling suspension.

5.10.6 Positioning the Table

These sections provide guidance on using the table positioning functions.

Adjusting the Table Height

You can adjust the height of the table to ensure the region of interest is in the appropriate position.

For more information about positioning the region of interest in the isocenter, see *Isocentering* (page 92).

1 Clear all objects from the path of the table.



2 Using the control module, adjust the table height until the region of interest is in the middle of the field of view.

This can be aided with fluoroscopy.

Floating the Tabletop

You can float the tabletop laterally and longitudinally to assist in positioning the region of interest.

Depending on your system configuration, lateral and longitudinal movements may be manual or motorized.

1 Clear all objects from the path of the table.



2 Using the control module, float the table and center the region of interest in the middle of the field of view.

This can be aided with fluoroscopy.

Tilting the Table

The tilt function allows you to tilt the tabletop from -17 degrees to +17 degrees.

CAUTION

Beware of finger entrapment. Do not place your fingers on the table bellows during tilting.

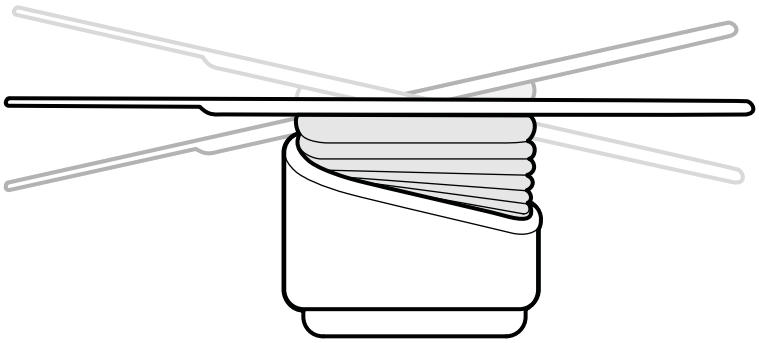

Figure 36 Tilting the table

1 Clear all objects from the path of the table.

2 Press and hold **Tilt** until the desired angle is reached.

If the synchro tilt option is available and the working position is set to doctor side or nurse side, the table height automatically adjusts during the tilt movement to ensure the region of interest stays in the isocenter.

3 To float the tabletop when it is tilted, press the **Float Tabletop** control on the control module, and then push the **Float Tabletop** control in the direction that you want to move the tabletop.

To assist with moving the tabletop with heavy patients, longitudinal movements are automatically motorized when you use **Float Tabletop** with a tilted tabletop. Lateral movements are not motorized, even when the tabletop is tilted.

Cradling the Table

The cradle function allows you to cradle the tabletop from -15 degrees to +15 degrees.

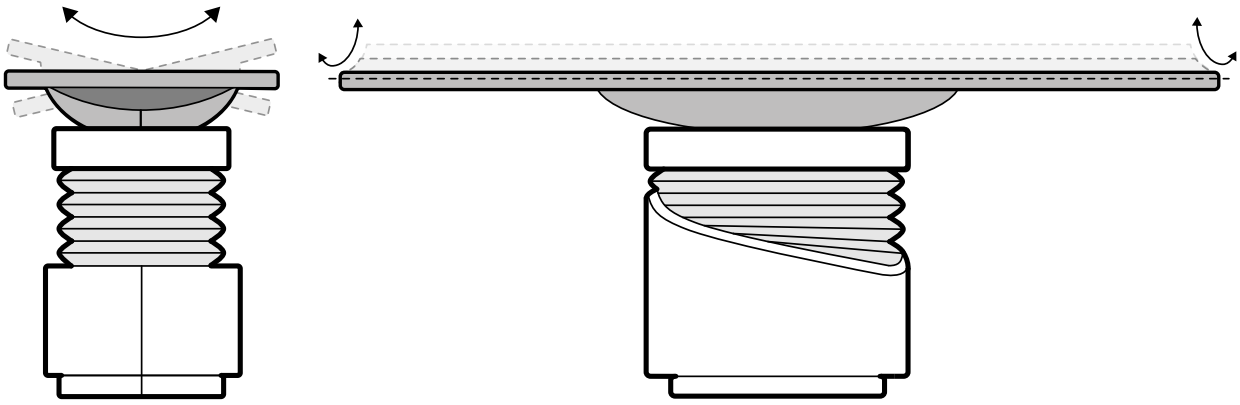

Figure 37 Cradling the table

1 Clear all objects from the path of the table.



2 Press and hold **Cradle** until the desired angle is reached.

Pivoting the Table

The pivot function allows you to pivot the tabletop for improved accessibility during patient transfer, or to position the tabletop for a procedure.

1 Clear all objects from the path of the table.

2 To pivot the table from the head end, extend the tabletop to the head end to make pivoting the table easier.

If the procedure or room arrangements require you to pivot the table from the foot end, do not extend the table, so that less force is necessary to perform the pivot movement.



3 Unlock the table pivot lock by turning and holding the **Pivot Lock** switch on the control module until the unlock indicator light changes color from white.



4 Push the table to the desired angle.

There are detent positions at +13 degrees and -13 degrees, or you can pivot the tabletop between +90 degrees and -180 degrees.

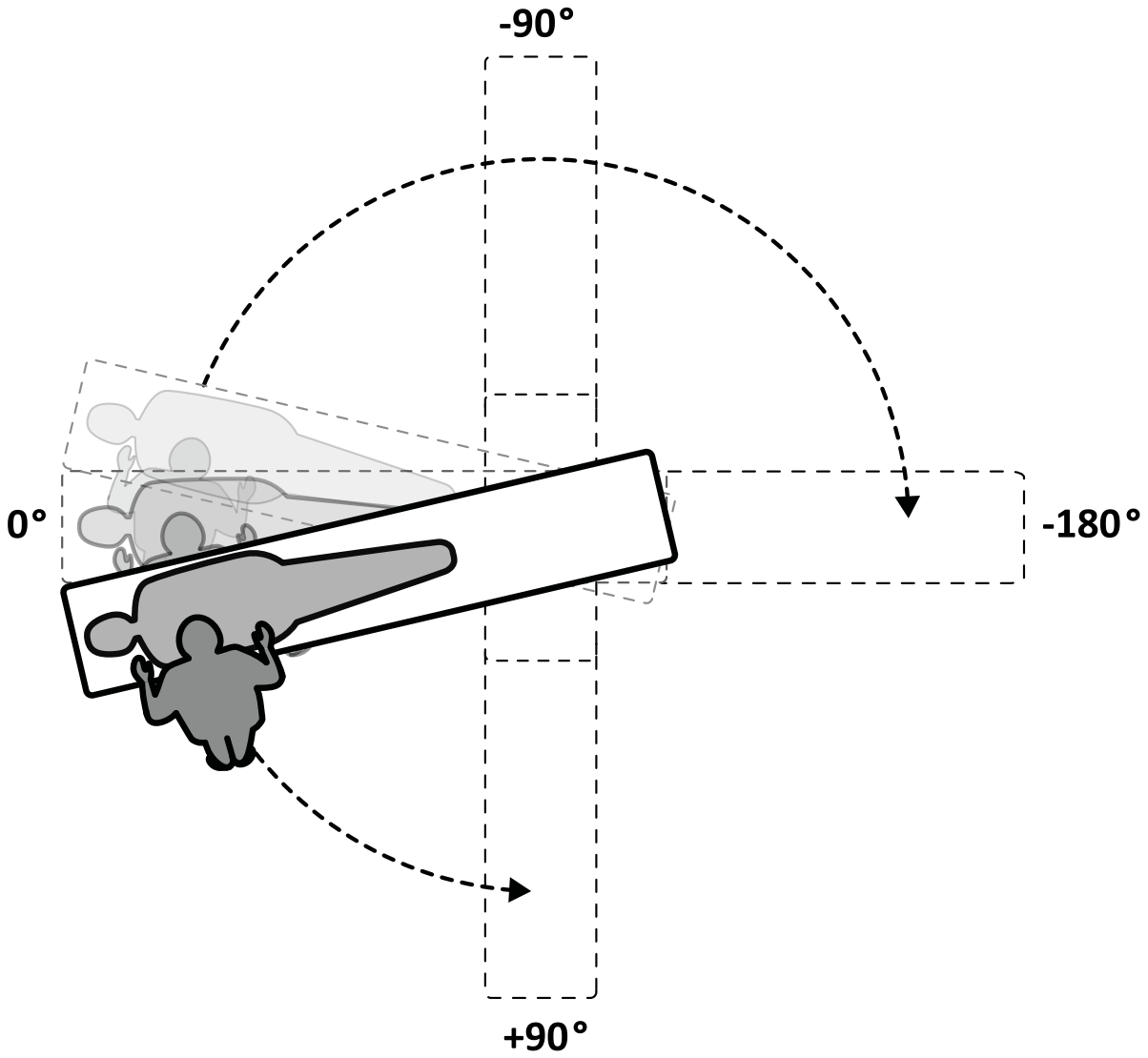

Figure 38 Range of pivot movement

NOTE ***If the table is pivoted by more than 13 degrees, the BodyGuard cannot prevent collisions with the patient during rotation and angulation movements.***

NOTE ***The pivot lock engages automatically after 10 seconds if you do not pivot the table within that time.***

5 Before continuing with your task, ensure that the pivot lock is engaged.

The unlock indicator light on the control module switches to white when the pivot lock is engaged.

Swiveling the Table

The swivel function allows you to position the table for entire body imaging with the F20 system.

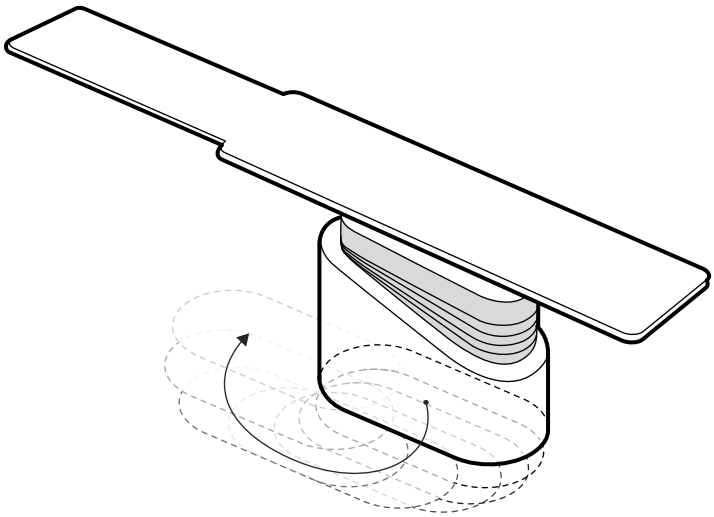

Figure 39 Swiveling the table

1 Clear all objects from the path of the table.

2 Press and hold the direction button on the swivel hand switch.

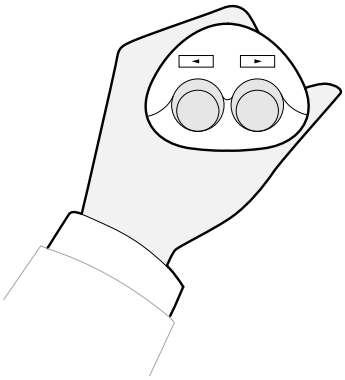

Figure 40 Swivel hand switch

5.10.7 Using Radiation Shields

Radiation shields provide additional protection against stray radiation. You can use a table-mounted radiation shield and a ceiling-suspended radiation shield with the system.

The table-mounted and ceiling-suspended radiation shields are 0.5 mm lead (Pb) equivalent. For optimal protection, use the table-mounted and ceiling-suspended radiation shields together with lead aprons.

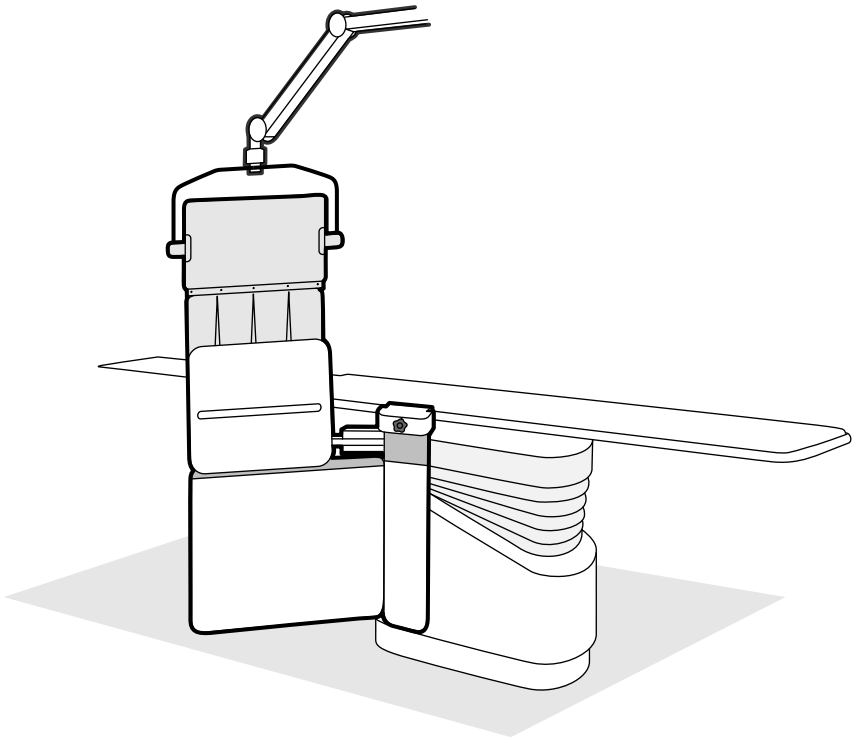

Figure 41 Combined use of the radiation shields

Before using the radiation shield, check that the shielding material is not damaged. The shield should be free from visible cracks and tears when examined using fluoroscopy. It is strongly recommended to perform this check on a regular basis and whenever there is a possibility that the shield may have been damaged.

Remove the table-mounted radiation shield from the table accessory rail before tilting or cradling the tabletop, as it may come loose during the movement. When the tabletop is cradled, the protection provided by the table-mounted radiation shield is reduced.

Collisions may occur with the radiation shields when positioning the C-arm or the monitor ceiling suspension. Take care to avoid collisions as this may damage the equipment.

Attaching and Positioning the Table-Mounted Radiation Shield

NOTE ***Do not fit the table-mounted radiation shield to the additional table accessory rail.***

1. If desired, place a sterile bag over the radiation shield and apron.
2. Hold the radiation shield with your right hand on the clamping device and your left hand on the arm of the shield.
3. Slide the jaws of the clamping device on to the tabletop accessory rail.
4. Turn the knob of the clamping device clockwise to clamp the radiation shield to the accessory rail.

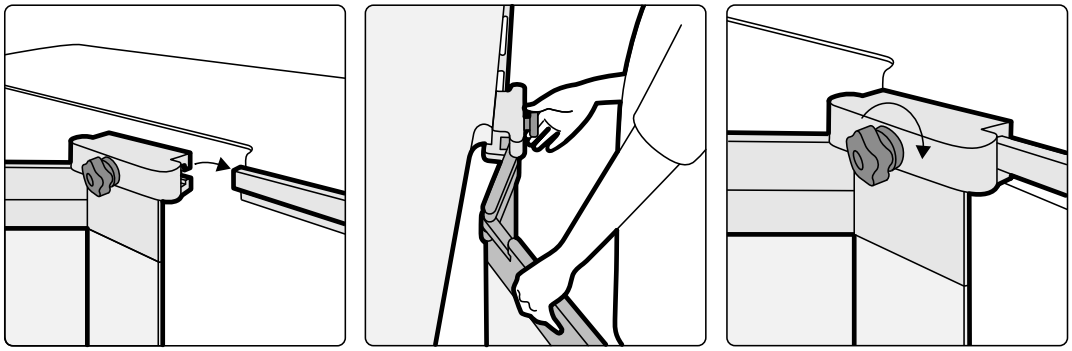

Figure 42 Attaching the radiation shield with the clamping device

5 The radiation shield can be placed in the following positions:
- Working position with both the lower and upper shield in use.
- Working position with the lower shield only in use (the upper shield is folded down).
- Parking position (shield stowed under the table).

6 To use the upper shield, lift the shield upward until the pins drop into the notches.

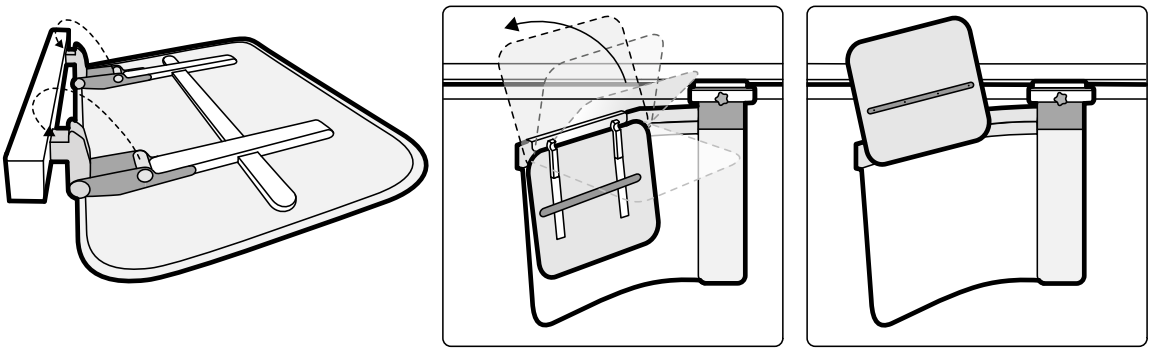

Figure 43 Using the upper shield

7 To park the radiation shield, fold down the upper shield if deployed and push the lower shield underneath the table.

Positioning the Ceiling-Suspended Radiation Shield

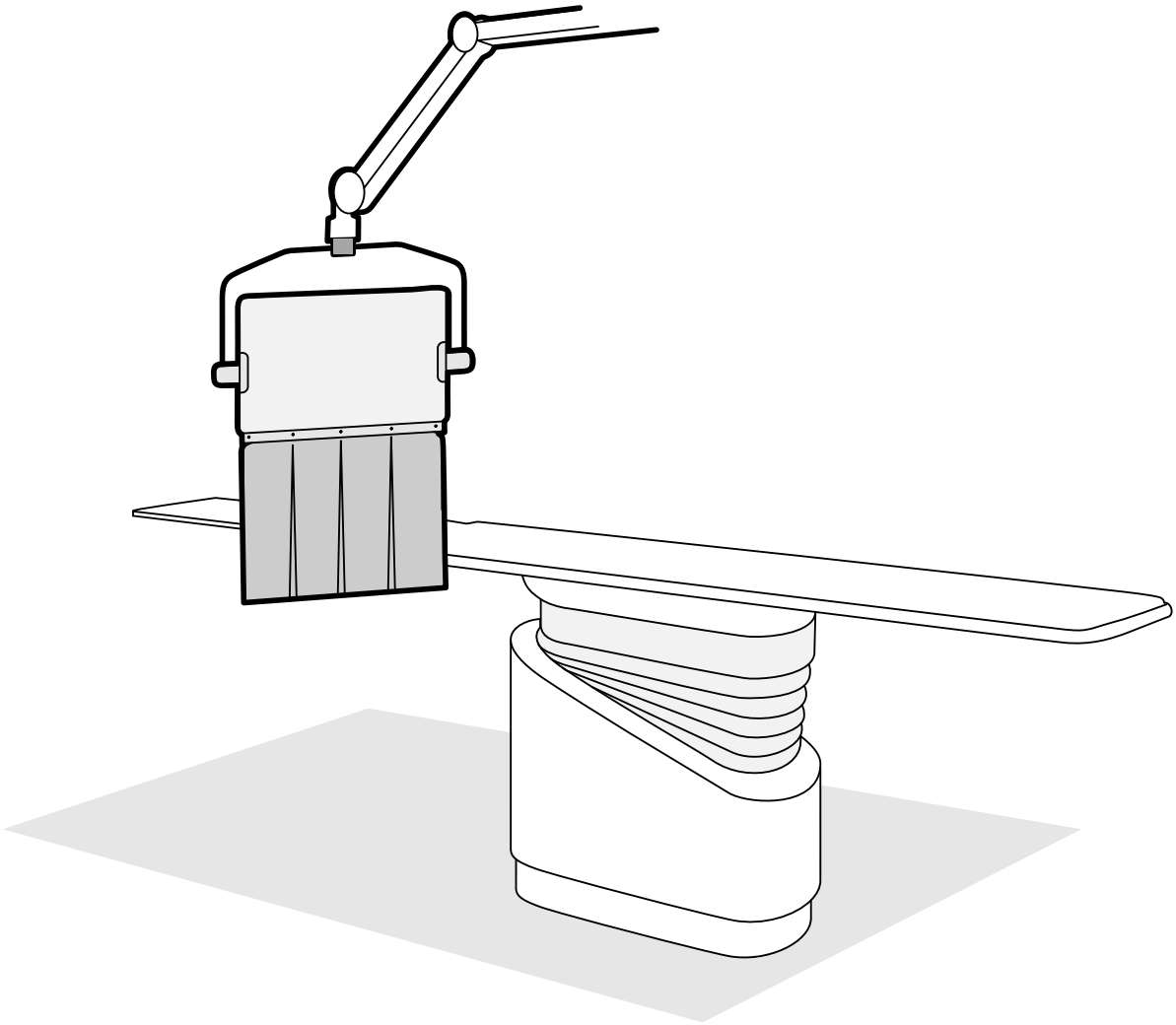

Figure 44 Ceiling-suspended radiation shield in the working position

1. If desired, place a sterile bag over the apron of the shield and part of the lead acrylic shield, securing the bag in the two notches.
2. Move the shield to the desired position using the suspension arm.
3. Tilt the shield to the desired position.

5.10.8 Using Sterile Covers

Detailed procedures for fitting sterile covers are the responsibility of the healthcare environment.

Place a thin sheet of sterilized plastic over the tabletop, control modules, and pan handle. The viewpad, touch screen module, mouse and mouse table, radiation shields, foot switch, and detector must be covered separately.

NOTE ***When using a sterile cover on the touch screen module, ensure that the cover is fitted tightly to avoid problems when using the touch screen for actions such as dragging.***

5.11 Using an OR Table

You can use an OR table with the Azurion X-ray system. The level of integration depends on the OR table used, and available functions are described in this section.

The Azurion X-ray system is compatible with OR tables from the following manufacturers:
- Maquet
- Trumpf

For more information, see *Compatibility* (page 16).

Tableside Modules

Tableside modules can be mounted on the OR table. During patient transfer to or from the table, the tableside modules can be parked on a pedestal (option) in the examination room.

Geometry Set-Up and BodyGuard

When using an OR table, the following functions are not available:
- Automatic stop at work positions 1 or 2 during motorized longitudinal movement of the stand
- BodyGuard Off Below Table (optional function)

When using a Maquet operating table, the automatic bodyguard override (ABO) function is available. When an object is sensed, this function allows stand movements and lateral or longitudinal movements of the table to continue at a safe speed.

Collision Detection

WARNING
When moving the table, take care to avoid collisions with the stand.

The intelligent collision protection (ICP) function prevents collisions between the stand and the OR table base.

When a collision is detected, the following actions are performed:
- All table movements are stopped.
- A user message is displayed, and an acoustic signal sounds.

Normal movement is restored when the collision is resolved.

NOTE ***When the stand is positioned away from the stored position, the L-arm starts to rotate when using the Recall APC function, and the C-arm can hit the tabletop during rotation movement of the L-arm.***

NOTE ***If the X-ray system is switched off, the collision detection system will not function when table movement is controlled with the OR table controls.***

Accessories

The following accessories can be used with an OR table.
- Philips radiolucent arm support (not available with the Trumpf OR table)
- Peripheral X-ray filters
- Pulse cath arm support
- Accessory bracket for ceiling suspended radiation shield
- Ceiling suspended radiation shield
- Cerebral filter
- Neuro wedge

NOTE ***Additional accessories may be available from the manufacturer of the OR table. However, these accessories have not been tested for use with the Azurion X-ray system. Refer to the information provided by the manufacturer.***

Parking the Stand

If the optional ceiling rail extension is installed, you can park the stand so that it is out of the way of the table. The optional ceiling rail extension is available at the head end or at the foot end.

5.11.1 Maquet Operating Table

The Maquet operating table consists of the operating table column and tabletop. The tabletop is available in the following configurations:

- Universal tabletop: Suitable for a range of surgery applications, using a base plate and additional jointed modules to allow patient positioning.
- Radiolucent tabletop: Suitable for interventional procedures and minimally invasive operations.

NOTE ***Do not use straps from Philips to secure the patient during movements. Refer to the Maquet documentation for details of how to secure the patient.***

Startup and Shutdown

Startup and shutdown of the Maquet operating table is managed by the X-ray system. It is not necessary to power it on or off.

Patient Transfer

During patient transfer, the X-ray system may be switched on or off. If the X-ray system is switched on, table movement functions on the control module of the X-ray system are locked.

Patient Orientation

The Maquet operating table features a blue dot on the table base. When the upper part of the patient's body is on the same side as the blue dot, the patient orientation for the Maquet operating table is Normal (patient's head at the head end of the table). Otherwise, the patient orientation is Reversed (patient's head at the foot end of the table).

Patient orientation functions on each system are linked; when the patient orientation is changed on the Maquet operating table, the patient orientation indication of the patient's head at the head end of the table or at the foot end of the table is updated on the X-ray system (the indication of the patient facing up or facing down is not updated). The displayed rotation angle and angulation angle are also updated.

Operation Modes

A subset of table functions is available using the control module of the X-ray system.

Function	Universal table top	Radiolucent table top
Basic table functions (longitudinal, transverse, height, and cradle movements)	Yes	Yes
Isocentric tilt	No	Yes
SyncraTilt	No	Yes
Automatic Position Control (APC)	No	Yes
Bolus chase (FDPA)	No	Yes
Recall APC	Yes	Yes
Table locking (whole system)	Yes	Yes
Emergency stop	Yes	Yes

Function	Universal table top	Radiolucent table top
Reset geometry (not available when the stand and table are locked)	No	Yes
Compatibility with Interventional Tools	Yes (with universal frame)	Yes

Alternatively, full control of the table is provided on a dedicated Maquet remote control module or joystick. For details of the Maquet user interface controls, refer to the documentation supplied with the Maquet operating table.

NOTE ***To prevent unintentional movement of the Maquet table during procedures that require imaging, it is recommended that you do not use the Maquet controls, and instead use the two-step approach of the Philips controls: unlock the table and use the movement controls.***

NOTE ***Any movement function can be started from either the control module or the Maquet user interface controls in the examination room. However, if a movement function is activated on each module at the same time, all movements are blocked until the movement function on both modules is deactivated.***

NOTE ***If movements are blocked on the control module after changing the table top, first activate the desired movement using the Maquet user interface controls. The control module will then be enabled again for further movements.***

NOTE ***If the geometry is locked by the control module and the X-ray system is switched off, the Maquet table is automatically unlocked. Table functions are still available using the Maquet remote control module.***

5.11.2 Trumpf Operating Table

The Trumpf operating table consists of the operating table column and tabletop. The tabletop is available in the following configurations:

- SQ14-XTRA Imaging tabletop
- Carbon Floatline Imaging tabletop
- Universal tabletop

Only the SQ14-XTRA and Carbon Floatline Imaging tabletops are suitable for X-ray imaging with the X-ray system.

You can change the tabletop using the Trumpf shuttle and table docking system.

NOTE ***When docking the shuttle to change the tabletop, ensure that the stand is parked. This provides space for the shuttle and prevents interference from the X-ray system's collision prevention features while docking the tabletop.***

NOTE ***Do not use straps from Philips to secure the patient during movements. Refer to the Trumpf documentation for details of how to secure the patient.***

Limitations

When using the Trumpf operating table, bolus chase and automatic position control of the table are not available. Automatic position control is available for stand positioning only.

Using Interventional Tools with the Trumpf operating table may impose limitations. Some of the tools, such as roadmap, require table position tracking, which is not available on this system. In such cases, any movement of the table (for example, panning) leads to loss of image registration.

NOTE ***The system will not detect a loss of image registration if the table is panned while using interventional tools.***

Operation Modes

You can control the Trumpf table using a dedicated remote control or a control panel on the table column. For details of the Trumpf user interface controls, refer to the documentation supplied with the Trumpf operating table.

When the X-ray system is switched off, it is still possible to use the Trumpf table.

WARNING
After the X-ray system is switched on, do not move the table until the X-ray system is fully operational.

Table Control

The Trumpf table can be controlled using the remote control supplied with the table, or using the emergency control panel on the table base.

NOTE ***The control module cannot be used for controlling the Trumpf table.***

When moving the table towards the tube or towards the flat detector, the table stops at a distance of approximately 5 cm from the tube or detector cover.

A collision message appears on the X-ray system display. In this situation it is not possible to move the table in any direction.

NOTE ***Be aware that the user message disappears after some time, but table movement is still inhibited. In this situation the table can be moved in table override mode. The restriction can be canceled by moving the stand away from the table.***

When the table has been stopped by BodyGuard, the table can be moved in override mode. The override mode works when the table override joystick is moved downwards and a table movement button is pressed simultaneously. Alternatively, you can use the emergency control panel on the table base which will override movement restrictions.

If the movement has been stopped by BodyGuard, the table can also move again when BodyGuard is no longer active because the stand has been moved away. The table override joystick does not have to be used in this situation.

As long as the override mode is active, a beep sound is heard and a BodyGuard user message is shown.

CAUTION
It is possible for the table to collide with the X-ray system. The table will not stop by itself.

X-ray System Controls

If you are moving the X-ray system towards the Trumpf table and the X-ray system stops because it is too close (5 cm) to the table, you can move the X-ray system away from the table without overriding.

When BodyGuard is activated it is possible to move the X-ray system closer to the table at a lower speed.

During a warm restart procedure and in the X-ray system's fast fluoroscopy mode, you can move the table.

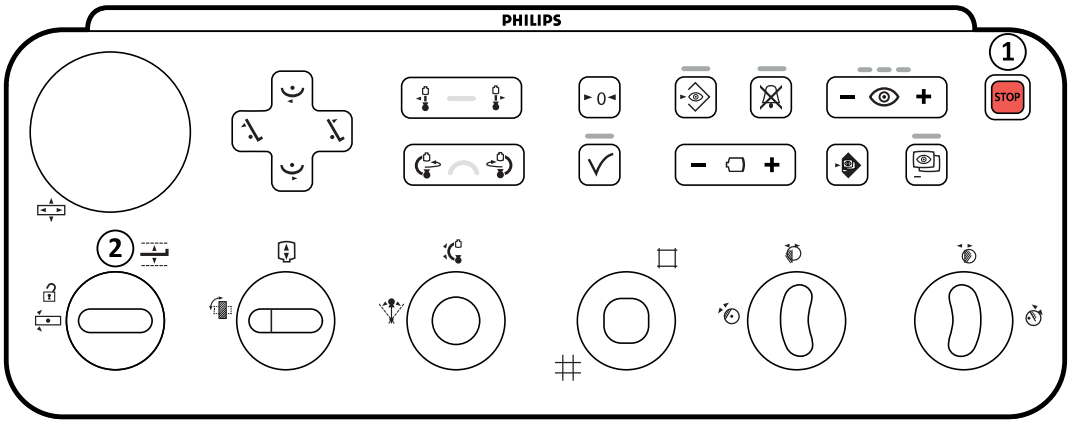

Figure 45 Control module

Legend	
1	Emergency stop
2	Table override

Emergency Stop



The emergency stop button stops any motorized movement by switching the geometry functions off. The geometry functions become operational again after a geometry restart.

To perform a geometry restart, press **Power On** on the review module.

Table Override



Move the joystick downward to activate the override mode.

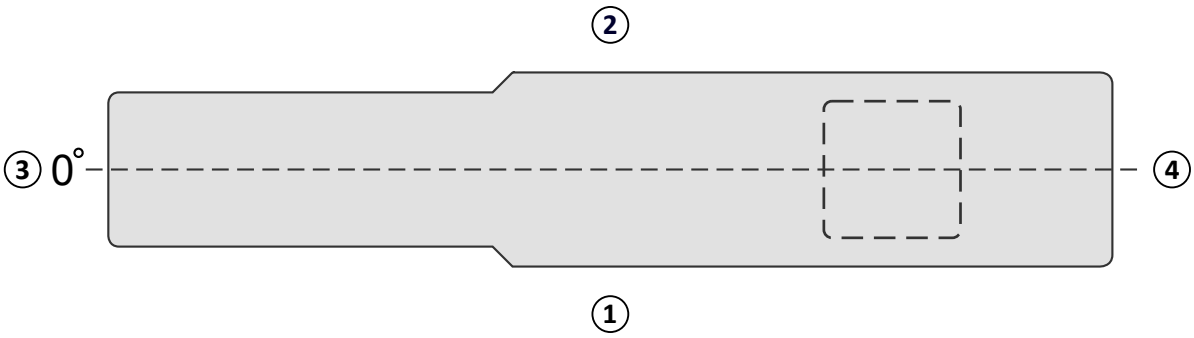

Figure 46 Top view of the patient table

Legend			
1	Doctor side	3	Head end
2	Nurse side	4	Foot end



WARNING

The system has limited collision prevention functionality when used in combination with a Trumpf table. When moving the X-ray system or the table manually or under motor control, take care to avoid collisions with the patient or objects.

NOTE ***The X-ray system patient orientation position information is inaccurate since it is based on the horizontal table position and is independent of the position of the Trumpf table.***

Rotation Scan

After defining the end position for the rotational scan, Trumpf table movements are blocked.

The table is enabled again once the rotational scan has been performed.

If the rotational scan procedure is stopped before the scan is completed, the table is only enabled again once another procedure is selected.

5.11.3 Fitting Sterile and Disposable Covers

CAUTION
You should always use disposable sterile covers with the system when using it in a (hybrid) OR environment. You should cover the user interface modules at the table side to prevent an inflow of fluid.

Sterile and non-sterile covers and sheets for the equipment can be purchased from Ecolab. For details, please refer to the Ecolab website:

www.ecolab.com

NOTE ***Any covers that are positioned under the table, or that are moved under the table during the procedure, must be considered as not sterile.***

NOTE ***If there is any doubt regarding a cover's sterility, consider it not sterile.***

NOTE ***A new set of sterile covers must be used for each procedure.***

The following covers are provided in the sterile covers package:
- Stand bottom cover
- Stand top cover
- Detector cover
- Cable harness cover

1 Park the stand in the standby parking position, with the detector above and the tube below.

NOTE ***If you cannot easily reach the top part of the stand, turn the stand to the lateral position.***

2 From the sterile cover set package, take the stand bottom cover, which is identified with a sticker displaying a tube image.

3 Place the stand bottom cover over the tube and the bottom inner part of the stand.

4 Open the glued stickers and attach the inner part of the stand bottom cover to the bottom inner part of the stand.

5 Take the cable harness cover, which is identified with a sticker displaying an arrow.

6 Open the glued stickers and begin to attach it along the length of the left side of the cover, and then along the length of the right side.

7 Take the stand top cover, which is the biggest piece of the cover set package, and which is identified with a sticker displaying a detector image.

8 Starting with the opening indicated with the identification sticker, place the stand top cover around the top part of the detector, ensuring that the elasticated end surrounds the flat round connection part of the detector.

9 Open the glued stickers and attach the stand top cover to the inner part of the stand from top to bottom.

10 Take the detector cover, which is the smallest piece of the sterile covers package.

11 Place the detector cover over the detector, ensuring that the elasticated end surrounds the flat round connection part of the detector.

A separate cover package can be purchased from Microtek for the touch screen module. The Instructions for Use supplied with the touch screen module cover package provide guidance on fitting the cover.

Standard covers can be used for the foot switch, which should be covered with a plastic cover or bag.

6 Performing Procedures

You can perform procedures and acquire images when a patient study has been scheduled or started.

Before performing procedures with the equipment, read and follow the guidelines contained in *Radiation Safety* (page 22).

WARNING
If you misuse radiography (exposure) on purpose for real-time imaging, the image display delay may be longer than for radioscopy (fluoroscopy).

WARNING
Misinterpreting still images as live images could lead to serious patient injury. When images displayed are live, the following icon is displayed:



In a biplane system, the X-ray status icon is displayed for each channel.

WARNING
Do not acquire X-ray images while actively using electrosurgical devices (for example, electrosurgical knives), or cardiac defibrillators. The electromagnetic interference generated by these devices may reduce image quality, resulting in additional exposure series being required.

When you start a study, the ProcedureCard that you selected when preparing the study provides the X-ray protocols. While performing the procedure, you can change the ProcedureCard and the X-ray protocol settings. For more information, see the following sections:

- *ProcedureCards* (page 50)
- *Starting a Study* (page 54)

Many of the procedures described in these Instructions for Use are further supported by the extended functionality of Interventional Tools. For more information, see *Interventional Tools* (page 430).

Before acquiring new images, you should check that the system has sufficient storage capacity and protect or archive important data if necessary. For more information, see *Checking the Available Disk Storage Space* (page 53).

6.1 General Acquisition Workflow

These steps provide a general workflow for performing a study. Details of performing specific study types are available in dedicated procedures in this section.

1 Select a scheduled patient study from the patient database.

For more information, see *Patient Database* (page 49).

2 Select the desired X-ray protocol in the **X-ray Settings** task in **X-ray Acquisition** application on the touch screen module, or in the acquisition window.

The desired ProcedureCard is already selected within the scheduled study. For more information, see *ProcedureCards* (page 50).

3 Position the region of interest.

For more information, see the following sections:

- *Positioning the Patient on the Table* (page 54)
- *Isocentering* (page 92)

4 Start acquisition.

For more information, see *Acquiring Images* (page 81).

5 When the study is complete, close the study.

For more information, see *Ending a Study* (page 116).

6.2 Enabling X-ray

To use the system for imaging, you need to enable X-ray. You can do this using the review module or the touch screen module.

You can see on the touch screen module if X-ray is enabled or disabled. The following symbols are used:

Symbol	Status
	X-ray is disabled
	X-ray is enabled



1 To enable X-ray using the review module, press **Enable X-ray**.

When X-ray is disabled, the indicator light is on.

When X-ray is enabled, the indicator light is off.



2 To enable X-ray using the touch screen module, tap **X-ray Disabled**.

6.3 X-ray On Indicators

For safety reasons, the system is provided with several indicators to show that X-ray is active.

The following paragraphs describe the indicators and their locations.

Indication Box

An indication box is installed in the examination room. It provides indicator lights for when the system is ready for exposure (green) and when X-ray is on (yellow). When X-ray is on, the indication box also provides an audible signal.

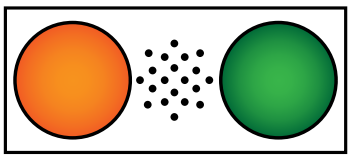

Figure 47 Indication box: X-ray On indictor light (left) and Ready for Exposure indicator light (right)

NOTE ***Even if the Ready for Exposure indicator light is not lit, it is still possible to start fluoroscopy.***

Outside Indicator

At least one indicator light is positioned outside the examination room, next to each door. The light is lit when a foot or hand switch is pressed to initiate fluoroscopy or exposure.

Monitor Ceiling Suspension Indicator

An indicator light is mounted on each side of the monitor ceiling suspension in the examination room. The light is lit when a foot or hand switch is pressed to initiate fluoroscopy or exposure.

NOTE ***The 2-fold and 3-fold spring-arm monitor ceiling suspensions do not have an indicator light.***

NOTE ***When a third-party frame is used, the indicator light is on the monitor ceiling suspension auxiliary kit.***

Live Image Indicator



When fluoroscopy or exposure is active, an X-ray on indicator icon is displayed in the live image window.

In a biplane system, the X-ray status icon is displayed for each channel.

Status Area



When fluoroscopy or exposure is active, an X-ray on indicator icon is displayed in the status area. For more information, see *Status Area* (page 398).

6.3.1 Audible Signals

The system is equipped with audible signals which can be used to signal when fluoroscopy or exposure are active, to prevent unintended radiation.

The three audible signals, which can be configured by technical support, are:

- Fluoroscopy buzzer
- High level fluoroscopy buzzer
- Exposure buzzer

Fluoroscopy Buzzer

With the fluoroscopy buzzer configured and the high level fluoroscopy buzzer not configured, if fluoroscopy is activated at the low/normal or high flavors the buzzer sound is a continuously audible signal.

With the fluoroscopy buzzer and high level fluoroscopy buzzer configured, if fluoroscopy is activated at the low/normal fluoroscopy flavors, the buzzer sound is a continuously audible signal. When using the high fluoroscopy flavor, the buzzer sound is a repeating 2 pulses audible signal every 2 seconds.

High Level Fluoroscopy Buzzer

With the high level fluoroscopy buzzer configured and the fluoroscopy buzzer not configured, if fluoroscopy is activated at the high fluoroscopy flavor the buzzer sound will be a repeating 2 pulses (audible) signal every 2 seconds. The buzzer does not sound if fluoroscopy is activated at the low/normal fluoroscopy flavors.

Exposure Buzzer

When the exposure buzzer is configured, if exposure is activated the buzzer sound will be a continuously audible signal. When the exposure buzzer is not configured, the buzzer does not sound if exposure is activated.

6.4 Acquiring Images

You can acquire fluoroscopy images or exposure images. Exposure images are automatically stored, but you can also manually store fluoroscopy images.

When acquiring images, the X-ray protocol settings in use are displayed in the status area in the control room and the examination room.

You cannot perform fluoroscopy and exposure at the same time. However, when using a biplane system, you can perform either fluoroscopy or exposure on both channels simultaneously.

You can only acquire images when the system is ready to do so. For more information, see *System Readiness* (page 81).

6.4.1 System Readiness

The readiness of the system to perform procedures is indicated in the status area.

The status area indicates the system status using the following symbols:

Symbol	Status
	The system is ready for acquisition. Exposure and fluoroscopy are possible.
	The system is not ready for exposure acquisition. Fluoroscopy is possible.
	X-ray is disabled.
	X-ray is on.
	Exposure is selected.
	Fluoroscopy is selected.

A combination of these symbols is used to advise you of the readiness of the system. The following table shows examples of these combinations and their meanings.

If the system is not ready, you should observe the guidance given in the messages displayed in the status area.

Indication	Meaning
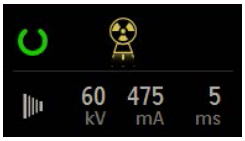	The system is ready and exposure is active
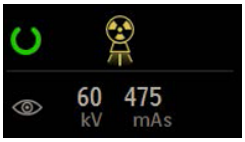	The system is ready and fluoroscopy is active

Indication	Meaning
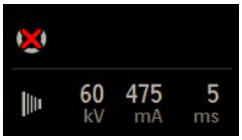	The system is not ready for exposure
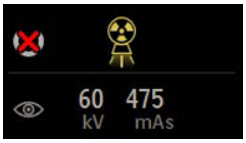	The system is not ready for exposure but fluoroscopy is active

6.4.2 Acquiring Fluoroscopy Images

Fluoroscopy is the generation of X-ray images at low air kerma rates.

During fluoroscopy, the following indications are displayed in the status area in the control room and the examination room:

- X-ray on indicator
- Fluoroscopy parameters
- Fluoroscopy flavor

Setting the Fluoro Flavor

You can choose which level of fluoroscopy to use. These fluoroscopy levels are known as flavors.

There are three fluoroscopy flavors.

Standard System	System with ClarityIQ (Option)
Low	Low
Normal	Medium
High	Normal

You can change the default fluoroscopy flavor before initiating fluoroscopy. The default flavor is defined when the system is installed.

Each flavor provides a different dose level, and can also differ for each group of X-ray protocols.

The indicator lights on the control module indicate which flavor is active.

You can set the fluoroscopy flavor in the following locations:

- Control module
- Touch screen module
- Acquisition window in the control room
- Live X-ray window in the examination room



1 To set the fluoroscopy flavor using the control module, press **+** or **-**.

Control Module Indicator Lights	Standard System	System with ClarityIQ (Option)
One	Low	Low
Two	Normal	Medium
Three	High	Normal

2 To set the fluoroscopy flavor using the touch screen module, do the following:



a Tap the **X-ray Settings** task.

b In the fluoroscopy panel, select the desired flavor from the list.

3 To set the fluoroscopy flavor in the acquisition window, do the following:



a Click the **X-ray Settings** task.



b Expand the **Fluoroscopy** task panel.

c Select the desired flavor from the list.

Performing Fluoroscopy

Fluoroscopy is the generation of X-ray images at low air kerma rates.



WARNING
Misinterpreting still images as live images could lead to serious patient injury. When images displayed are live, the following icon is displayed:



In a biplane system, the X-ray status icon is displayed for each channel.

Ensure that you have selected and started the required study in the patient database. For more information, see *Starting a Study* (page 54).

1 Position the patient.

For more information, see *Positioning the Patient on the Table* (page 54).



2 To start fluoroscopy, press the corresponding pedal on the foot switch.

During fluoroscopy, the X-ray on indicator light is on. For more information, see *X-ray On Indicators* (page 79).

3 To stop fluoroscopy, release the foot switch.

The following symbol is displayed in the top right-hand corner of the image, indicating that this is a Last Image Hold image:



You can see the unsaved fluoroscopy series in the **Series** task control panel. When a fluoroscopy series is unsaved, the pictorial displayed in the pictorial index has a diagonal line pattern applied so that you can immediately recognize that the series is not saved.

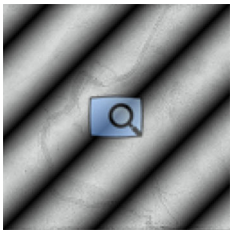

Figure 48 Unsaved fluoroscopy series pictorial

Storing Fluoroscopy Series and Images

You can store acquired fluoroscopy series and images in the patient's file.

You can retrieve them in the **Series** task.

You can store individual images while you are performing fluoroscopy, and store a fluoroscopy series after acquiring it.

1 Start fluoroscopy.

For more information, see *Acquiring Fluoroscopy Images* (page 82).

2 To store (or grab) individual images while you are performing fluoroscopy, do one of the following:



- On the control module, press and hold **Fluoro Store**.



- On the touch screen module or in the acquisition window, select and hold **Fluoro Store**.

Each image acquired while you hold the **Fluoro Store** button is stored. When you review the images, the following symbol is displayed in the top right-hand corner of the image, indicating that it is a stored image:



3 To store the series, do the following:

a Stop fluoroscopy.



The last image in the acquired series is displayed as a Last Image Hold image.

b Do one of the following:



– On the control module, press **Fluoro Store**.



– On the touch screen module top bar or in the acquisition window, select **Fluoro Store**.

The fluoroscopy series is stored. When you review the series, the following symbol is displayed in the top right-hand corner of each image, indicating that it is a stored series:



Resetting the Fluoroscopy Buzzer

When the cumulative fluoroscopy time reaches 5 minutes, you are given an audible signal.

The indicator lights flash at the **Reset Fluoroscopy Buzzer** buttons on the review module and the control module, and a notification is displayed on the touch screen module.

NOTE ***Fluoroscopy is switched off automatically after 10 minutes of uninterrupted fluoroscopy.***

1 To switch off the audible signal, do one of the following:



- On the control module or on the review module, press **Reset Fluoroscopy Buzzer**.



- On the touch screen module, tap **Reset**.

2 Continue with fluoroscopy if appropriate.

Using Dual Fluoroscopy

If the X-ray protocol you are using is configured to do so, you can use dual fluoroscopy to view two live fluoroscopy images. Live fluoroscopy is displayed in the live window, with a second live image displayed in a reference window.

You can switch dual fluoroscopy on or off in the acquisition window or using the touch screen module.

Dual fluoroscopy is activated automatically if the X-ray protocol is configured to do so, or when you zoom a last image hold fluoroscopy image. For example, when Roadmap is switched on. In the examination room, the Roadmap or SmartMask image is displayed in the acquisition window, and the fluoroscopy image is displayed in the reference window. For more information, see the following sections:

- *Using Roadmap Pro* (page 103)
- *Using SmartMask* (page 104)



1 Select the **X-ray Settings** task.

2 To switch dual fluoroscopy on, select **Dual Fluoro**.

Dual fluoroscopy is switched on and a second live image is displayed in an available reference window. You can manipulate the image in the live window, for example by applying zoom or subtraction, to assist with performing the procedure.

6.4.3 Using Shutters and Wedges

Shutters and wedges reduce the amount of stray radiation, which improves image quality.

Using shutters and wedges is also an important step to restrict the exposed patient area to the region of interest and minimize the X-ray dose.

You can adjust shutters and wedges using the control module and the touch screen module.

Shutters

Shutters are collimators used to limit the width and height of the irradiated area, and to improve the quality of the image. The rectangular shutters operate in pairs. The vertical shutters move together and the horizontal shutters move together. Shutter position is displayed as a graphic overlay with white dashed lines when making adjustments in the Last Image Hold image without the use of fluoroscopy.

Wedges

Wedges are filters used to reduce the X-ray intensity of the irradiated area and improve the quality of the image. There are two wedges that are controlled independently, each with their own switch. Wedge position is displayed as a graphic overlay when making adjustments in the Last Image Hold image without the use of fluoroscopy. A blue dashed line represents the left wedge and a green dashed line represents the right wedge.

Adjusting Shutters on the Control Module

You adjust the shutters using the shutter switch.

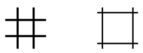

For more information, see *Monoplane Control Module* (page 413).

1 When using a biplane system, select the desired channel.

The symbol for the selected channel illuminates. Pressing the button repeatedly cycles through the following options:

Illuminated Symbol	Selected Channel
	Frontal channel
	Lateral channel
Both symbols illuminated	Both channels

2 Push the switch, left and right to adjust the vertical shutters.

3 Push the switch, up and down to adjust the horizontal shutters.

4 Press down on the switch to reset the shutters to automatic collimation.

The shutters move to the edge of the image area.

Adjusting Shutters on the Touch Screen Module

You can adjust the vertical and horizontal shutter positions using the touch screen module.

The shutters can only be adjusted on the touch screen module after acquiring an image. On biplane systems, a biplane acquisition is needed to adjust the shutters on both channels.

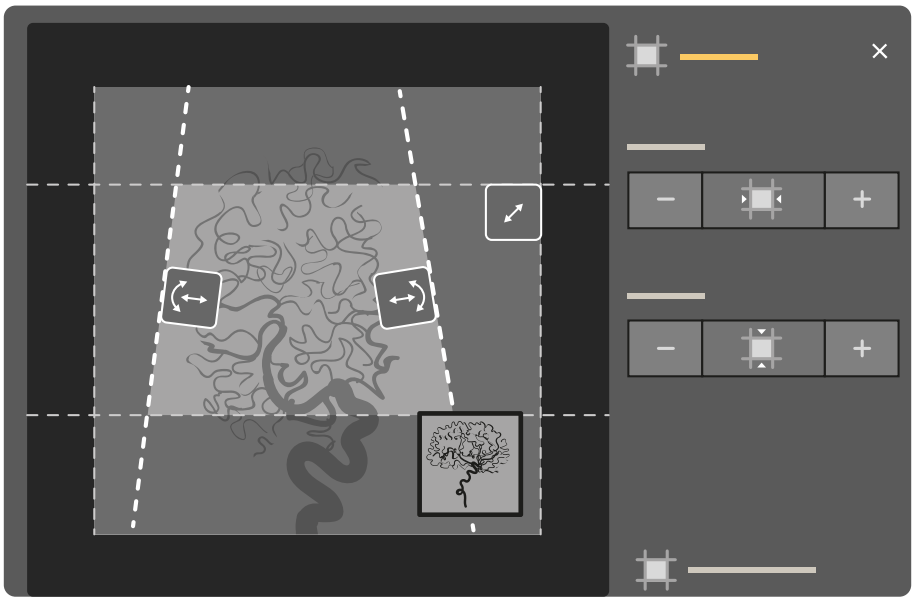

Figure 49 Shutter controls on the touch screen module (biplane system shown)

1 Select the **Collimation** task.

2 When using a biplane system, adjustments are applied to the channel represented by the main image. To change the channel, tap the mini viewport.

3 To move the horizontal shutters or the vertical shutters independently, do the following:



a Tap **Shutters**.

b Tap **+** and **-** to increase and decrease the horizontal shuttered area.

c Tap **+** and **-** to increase and decrease the vertical shuttered area.



4 To reset the shutters to the default positions, tap **Reset Shutters**.

Adjusting Wedges on the Control Module

You adjust wedges on the control module using the left and right wedge switches.

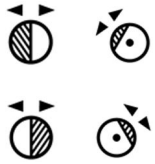

For more information, see *Monoplane Control Module* (page 413).



1 When using a biplane system, select the desired channel.

The symbol for the selected channel illuminates. Pressing the button repeatedly cycles through the following options:

Illuminated Symbol	Selected Channel
	Frontal channel
	Lateral channel
Both symbols illuminated	Both channels

2 Rotate the appropriate switch to rotate the wedge filter.

3 Push the switches left and right to adjust the relevant wedge position.

4 Press down on the switch to reset the relevant wedge to just outside the imaging area.

Adjusting Wedges on the Touch Screen Module

You can adjust the positions of the wedge filters using the touch screen module.

The wedges can only be adjusted on the touch screen module after acquiring an image. On biplane systems, a biplane acquisition is needed to adjust the wedges on both channels.

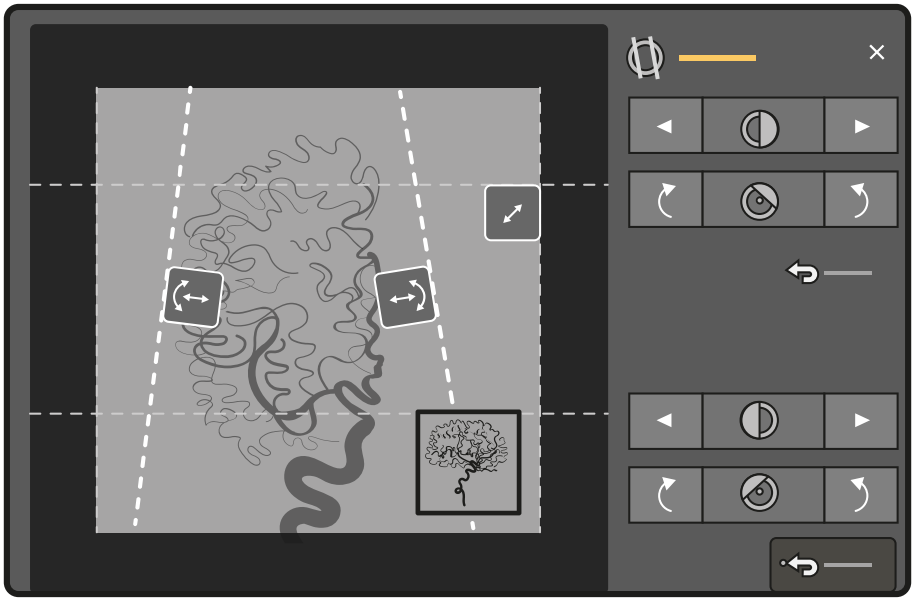

Figure 50 Adjusting wedges on the touch screen module (biplane system shown)

The left wedge is displayed in blue. The right wedge is displayed in green.



1 Select the **Collimation** task.

2 When using a biplane system, adjustments are applied to the channel represented by the main image. To change the channel, tap the mini viewport.



3 To adjust the position of each wedge by dragging, drag the handle for the desired wedge to a new position.

Dragging the wedge allows you to move the wedge laterally and to rotate the wedge simultaneously. Dragging the wedge up and down while dragging left and right, rotates the wedge.

4 To adjust the position of the left or right wedges using the control buttons, do the following:



a Tap **Wedges**.

b Tap the left or right arrow buttons to move each wedge left or right until the desired position is reached.

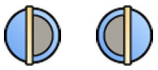

c Tap the rotation buttons to rotate each wedge clockwise or counterclockwise until the desired position is reached.



5 Tap **Reset** to reset the desired wedge filter to the default position.

Using Automatic Wedge Following

The system can automatically position the wedges according to the C-arm rotation and angulation angles.

For example, in 2D cardiac applications the system automatically positions wedges over the lung area to prevent over exposure. During geometry movement the wedges move in parallel, remaining positioned over the lung area. For cardiac procedures the system default is set to on.

1 On the touch screen module, tap the **Collimation** task.

2 Tap **Auto Wedge Follow** to set the function on or off as desired.

6.4.4 Acquiring Exposure Images

Exposure is the acquisition of X-ray images, resulting in a series of individual images.

Ensure that you have selected and started the required study in the patient database. For more information, see *Starting a Study* (page 54).

The X-ray settings are configured by the X-ray protocol selected in the ProcedureCard being used. For more information, see *ProcedureCards* (page 50).

Before and during exposure, the following indications are displayed in the status area of the acquisition window in both the control room and the examination room:
- System readiness
- X-ray on indicator
- Exposure parameters (per channel for biplane), kV, mA, mAs, and ms

NOTE ***Some of the steps in this procedure describe how to adjust the frame speed and the dose level to change the number of images captured per second and to adjust the image quality. For some X-ray protocols, these settings cannot be adjusted.***

1 Position the patient.

You can use fluoroscopy to position the patient. For more information, see the following sections:
- *Positioning the Patient on the Table* (page 54)
- *Acquiring Fluoroscopy Images* (page 82)



2 Check that the system is ready to acquire exposure images.

For more information, see *System Readiness* (page 81).

3 To change the number of images acquired per second, do the following:



a Select the **X-ray Settings** task.



b If you are using the acquisition window, click the **Exposure** expander to open the menu.

c Select a new **Frame Speed**.

4 To adjust the image quality by changing the dose level used, do the following:



a Select the **X-ray Settings** task.



b If you are using the acquisition window, click the **Exposure** expander to open the menu.

c Select a new **Dose Level**.

5 To start acquiring exposure images, press the exposure hand switch or the exposure foot switch.

Pressing the exposure hand switch button to the first stage prepares the system for exposure. Pressing the button to the second stage activates exposure.

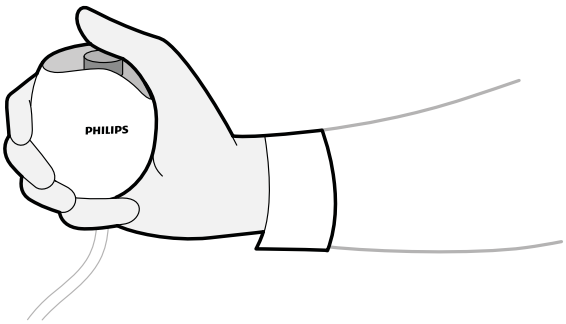

Figure 51 Exposure hand switch

During acquisition, the X-ray on indicator light is on.

6 To stop acquiring images, release the exposure hand switch or foot switch.

If the X-ray protocol in use is configured to automatically replay the series, then this starts automatically when you stop acquiring images. If this is not configured for the X-ray protocol you are using, the last image in the acquired series is displayed.

The following symbol is displayed in the top right-hand corner of all images in the acquired series, indicating that these are Last Image Hold images:



6.4.5 Zero Dose Positioning

When you have acquired an image, you can reposition the center of the image without using X-ray to determine the new center position.

1 Move the table to a new position using the float tabletop control on the control module.

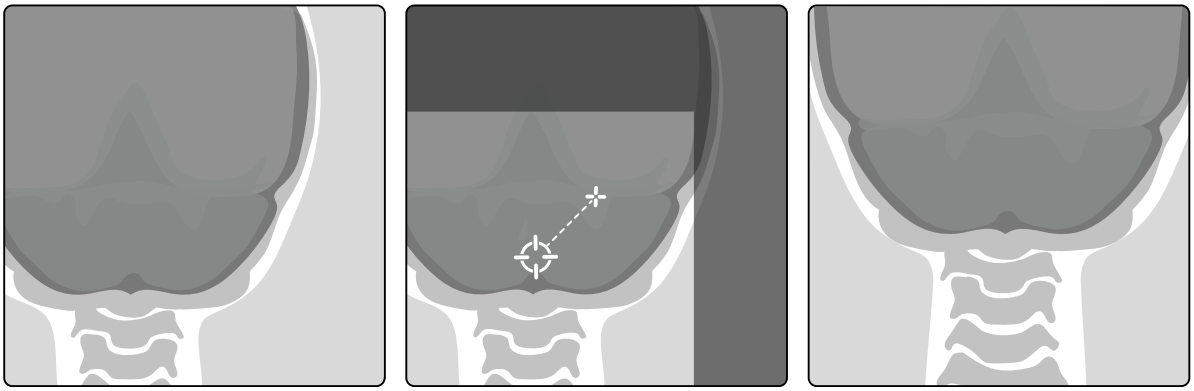

Figure 52 Repositioning the image center

The center of the image is displayed as a target in the X-ray window.

2 Once the new center position has been achieved you can acquire a new image.

6.5 Acquiring Images in an Emergency

In an emergency, you can start a study without logging on and without having previously scheduled the patient, by using the emergency access mode. While you are using the system in emergency access mode, you can acquire images but other system functions are not available.

When you operate the system in emergency access mode, you cannot review other studies. You can only acquire new images and series. You can review the images and series that you acquire while in emergency access mode but if you end the procedure, you cannot open it again until you have logged onto the system.

For more information about configuring the system to allow emergency access without logging on, see *Managing Users and System Logon* (page 233).

You can start an emergency study without entering any patient details. You can still find the study in the patient database by looking for the time and date of the study contained in the **Patient ID**.



1 If the system is not switched on, press and hold **Power On** on the review module until the indicator light stops flashing.

2 In the logon screen, click **Emergency**.

The system is available in emergency access mode. This mode allows you to perform an emergency procedure, but has reduced functionality.

A study is started immediately using the default ProcedureCard and a menu is displayed allowing you to select the ProcedureCard for the study.

3 To change the ProcedureCard, do the following:



a Select the patient in the patient list and click **Edit**.

b Select the appropriate **ProcedureCard Group** from the drop-down list.

c Select an alternative ProcedureCard.

4 If you are able to, enter any available patient information in the **Study Details** tab.

NOTE ***You cannot add or change patient details once images have been acquired. If you have not entered the patient's details before acquiring images, you can add the patient to the system later when you are logged on and use the Resolve Patient Mix wizard to associate the acquired series with the patient. For more information, see Resolving a Patient Mix (page 130).***



5 To start the study, click **Back to Procedure**.

6 Perform the necessary procedure.

7 To end the study, do the following:

a Click **End Procedure**.

A dialog box is displayed with a warning, reminding you that you are in emergency access mode and that the acquired data will not be accessible if you end the procedure.

b To close the dialog box and continue the study, click **Cancel**.

c To end the study, click **OK**.

The study ends and the **Add Patient** window is displayed, allowing you start another study if necessary.



8 To start a new study in emergency access mode, click **Start Procedure** and repeat steps 2 to 6.

9 If all studies are complete and emergency access is no longer needed, click **System** and select **Log Off** to exit emergency access mode and return to the logon screen.

6.6 Locking and Unlocking C-arm and Table Movements

The C-arm and table locks prevent unintended movements of the C-arm and the table.

The lock functions are controlled using the touch screen module.

The following locks are available:

- Lateral lock: Prevents the table from moving in the transverse direction, for example in bolus chase procedures.
- Full table lock: Prevents the table from moving in any direction.
- Geometry lock: Fully locks the table movements and the C-arm stand movements.



The procedure below uses the touch screen module but you can also lock and unlock all geometry movements using the review module in the control room.



1 On the touch screen module, tap the **Table** task.



2 To lock lateral table movements only, tap **Lateral**.

To unlock, tap **Lateral** again.



3 To lock all table movements, tap **All**.

To unlock, tap **All** again.

4 To lock all C-arm and table movements, do the following:



a Tap the geometry lock in the top bar of the touch screen module.

A confirmation message is displayed.

b To confirm that you want to lock all C-arm and table movements, tap **Lock**.

c To close the confirmation message without locking all C-arm and table movements, tap **Cancel**.

The icon changes to indicate the status of the lock:

	C-arm and table movements are locked
	C-arm and table movements are unlocked

5 To unlock all C-arm and table movements, do the following



a Tap the geometry lock in the top bar of the touch screen module.

A confirmation message is displayed.

b To confirm that you want to unlock all C-arm and table movements, tap **Unlock**.

c To close the confirmation message without unlocking all C-arm and table movements, tap **Cancel**.

6.7 Isocentering

For some types of procedure it is important that the anatomical region of interest is in the isocenter.

The isocenter of the C-arm is the point around which the detector and the tube rotate.

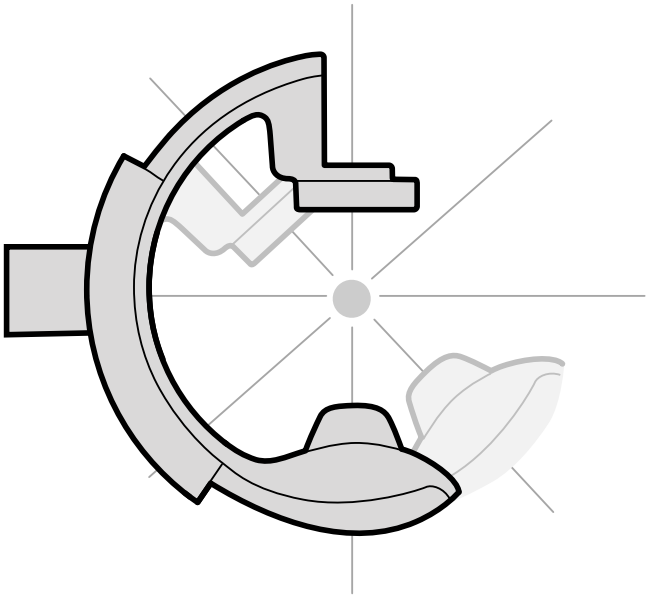

Figure 53 Isocenter of the C-arm

1 On the touch screen module, tap the **Projections** task.

2 If the C-arm is not already in the anterior-posterior position, do one of the following:
- Tap the **Stored** tab, select **AP**, then press **Accept** on the control module to move the C-arm.
- Position the C-arm at 0 degrees of rotation.

3 Using the control module, float the table and center the region of interest in the middle of the field of view.

This can be aided with fluoroscopy.

4 Reposition the C-arm by doing one of the following:
- Select **LAT** on the touch screen module, then press **Accept** on the control module to move the C-arm.
- Rotate the C-arm to 90 degrees

5 Using the control module, adjust the table height until the region of interest is in the middle of the field of view.

This can be aided with fluoroscopy.

6 In the **Table** task on the touch screen module, tap **Set ROI**.

The region of interest is in the isocenter and this table position is stored. A message is displayed in the status area of the acquisition window when this table position, the isocenter, is recalled.

6.7.1 Recalling the Isocenter Position

After saving the isocenter position, you can recall it if you have moved the table to another position.

You recall the isocenter position using the touch screen module.

1 On the touch screen module, tap the **Table** task.

2 Ensure that all table movement locks are off.

For more information, see *Locking and Unlocking C-arm and Table Movements* (page 92).



3 To recall the stored table height only, tap **Recall Height**.



4 To recall the isocenter position, tap **Recall ROI**.



5 Press and hold **Accept** on the control module until the table stops moving.

When the table has reached the stored isocenter position, the following icon is displayed in the status area.



NOTE ***If you release Accept before the table has stopped, press and hold the button again. The table will continue to move to the isocenter position.***

6.8 Image Orientation

The image orientation is determined by the patient orientation which is set by the ProcedureCard.



WARNING
Image orientation is determined by the patient orientation which is set by the ProcedureCard in use. Different image orientations are possible depending upon the settings in use. You should ensure that the image orientation is appropriate for the procedure you are performing.

For more information, see *ProcedureCards* (page 50).

For most procedures, images are displayed for a patient orientation where the patient is in the supine position with their head at the head end of the table. The image is displayed with the patient's head at the top of the image, and their face towards you as the viewer. This is known as the diagnostic view. For some procedures it may be necessary to position the patient differently, for example face-down on the table. When the image is displayed with the patient's head at the top but facing away from you as the viewer, this is known as the surgical view.

You can change the patient orientation in the X-ray protocol settings to match the actual patient orientation. For more information, see *Changing the Patient Orientation* (page 57).

The following surgical view indicator is displayed with images acquired in surgical view:



6.9 Selecting a Different Preset for FlexVision

Presets are predefined window and content layouts. You can edit presets to provide a layout that suits your workflow, and that displays the applications you want to use.

The preset layout for FlexVision is predefined in the selected ProcedureCard in use but you can select a different layout to use for the study.



1 On the touch screen module, tap the application selector.



2 Tap **FlexVision** to display available presets.

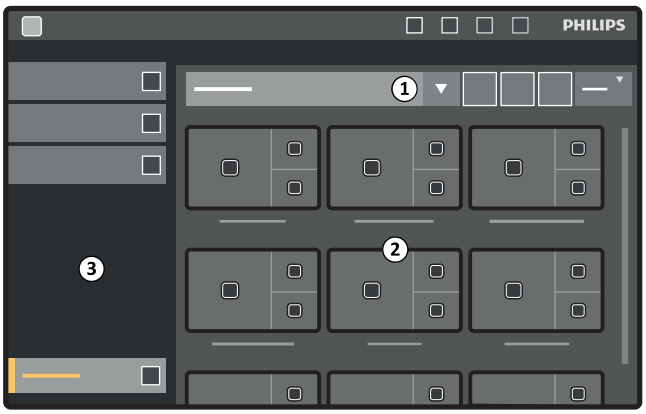

Figure 54 FlexVision preset menu

Legend	
1	Preset groups list
2	Available presets
3	Task panel

Each preset is depicted with a thumbnail image showing the predefined screen layout and applications.

3 Tap the desired preset to select it and apply it to the the FlexVision monitor.

4 To change the applications displayed during a study, do the following:



a Tap **Change Content**.

An image of the layout is displayed showing each application as an icon in each window.

b Drag the applications you want to use to the desired window positions on the layout image.

Your changes are applied immediately on the FlexVision monitor.

5 To reset the preset to its original settings, do the following:



a Tap **Select Preset**.



b Tap **Reset**.

For more information, see *Managing Presets for FlexVision Using the Touch Screen Module* (page 222).

6.9.1 Saving a Modified Preset for FlexVision

If you have modified the window content during a study, you can save it as a preset for future use.



1 On the touch screen module, tap the application selector.



2 Tap **FlexVision**.



3 Tap **Change Content**.



4 Tap **Save As**.

5 Select a preset group from the list.

6 Enter a name for the new preset using the on-screen keyboard.

7 To close the dialog box without saving the preset, tap **Cancel**.

8 To save the preset, tap **Save**.

6.9.2 Using the Screen Saver on FlexVision

When not acquiring X-ray images, you can display a screen saver on the FlexVision monitor.

NOTE ***The screen saver cannot be started while X-ray acquisition is in progress.***



1 On the touch screen module, tap the application selector.



2 Tap **FlexVision**.



3 Tap **ComfortThemes**.

Movies that are available for the screen saver are displayed.

4 To start a movie as the screen saver, do one of the following:
- Double-tap a movie.
- Tap a movie to select it and then tap **Play**.



The movie starts playing on the FlexVision monitor. The top bar and the status area remain visible while the movie is playing. Notifications are displayed on top of the movie.

NOTE ***You cannot create screenshots while the screen saver is active.***



5 To dismiss the screen saver, tap **Stop** on the selected movie.

The screen saver is dismissed automatically if you start X-ray acquisition or interact with the top bar or status area using a mouse.

6.10 Using Switchable Monitors

Using this option, you can choose which applications or video sources to display on each monitor in the examination room and save that configuration for future use.

To be able to switch video sources in this way, the switchable monitors option must be installed on your system.

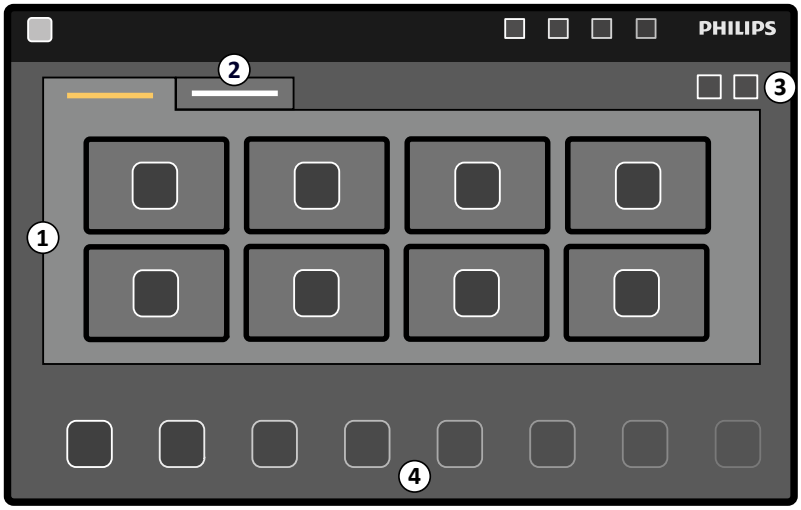

Figure 55 Switching monitors using the touch screen module

Legend			
1	Monitors	3	Toolbar
2	Additional monitors	4	Applications or video sources



1 On the touch screen module, tap the application selector.



2 Tap **Switchable Monitors**.

3 Identify the monitor and the application or video source you want to display on it.

The system can manage a maximum of 16 monitors. If more than 8 monitors are installed, tabs are used on the touch screen module, each displaying a maximum of 8 monitors.

4 Drag the application or video source on to the monitor.

Each monitor is identified by a sticker on the upper left corner. This number corresponds to the monitor number on the touch screen module.



Figure 56 Monitor identification sticker

You can display the same application or video source on more than one monitor.



5 To reset the monitors and undo your changes, tap **Reset**.



6 To save your changes, tap **Save**.

This saved configuration is saved as the default configuration, and is used the next time that the systems starts.

6.11 Injector Coupling

Timing of contrast injection and X-ray imaging can be coupled in order to synchronize the acquisition of images to the flow of contrast medium.

WARNING
Only use an injector system that has a compatibility statement for the X-ray system in use. Using any other injector system may result in the injection of an excessive amount of contrast medium. The operator is responsible for the amount of contrast medium administered to the patient.

Injection timing and exposure is calculated depending on the selected settings. You can manually adjust the X-ray delay time determined by the protocol settings. The value range is from 0 to 40 seconds, in steps of 0.5 seconds.

Two modes of injector coupling operation are available:
- Coupled: In coupled mode, you can have one or two-switch operation modes.
- Uncoupled: In uncoupled mode, the hand and foot switches control X-ray only, and injection is controlled by the injector hand switch.

For more information, see the following:
- *Connecting an Injector* (page 206)
- *Injector Control Methods* (page 430)

.

6.11.1 Uncoupled Operation

You can acquire images with injector coupling uncoupled.

When injector coupling is uncoupled, you must trigger the injector manually at the appropriate time using the injector hand switch.

You can select uncoupled operation using the touch screen module or the acquisition window.



1 Select the **X-ray Settings** task.

2 Select the X-ray protocol.



3 If injector coupling is on, tap **Coupling** to switch injector coupling off.

4 Start and stop injection by pressing and releasing the injector hand switch.

5 Start and stop acquisition by pressing and releasing the hand switch or the foot switch.

6.11.2 Coupled Operation

You can control injection of contrast medium automatically using injector coupling.

You can specify a delay between injection of contrast and acquisition of images to ensure that the contrast is visible at the region of interest. This is known as the X-ray delay.

NOTE ***Coupled operation is not available for every X-ray protocol.***

You can configure the system to uncouple after every exposure run to prevent unintentional injection of contrast medium. The system can be customized by technical support, so that the injector is not uncoupled after each exposure run and procedure change, but is only uncoupled following selection of a new patient.



1 Select the **X-ray Settings** task.

2 Select the X-ray protocol.



3 If injector coupling is off, tap **Coupling** to switch injector coupling on.

4 Adjust the X-ray delay time using **+** or **-**.

5 Prepare the injector.

Contrast is not injected until exposure starts.

6 Press the exposure hand or foot switch to start acquisition and if you are using a two-switch method, press the injector switch to start contrast medium injection.

A timer bar representing the X-ray delay count-down in seconds is displayed in the middle of the acquisition window. When the count-down is completed, X-ray acquisition starts automatically.

For more information about using one or two-switch methods, see *Injector Control Methods* (page 430).

7 Release the hand or foot switch to stop acquisition and contrast medium injection.

6.12 Multiphase Acquisition

Multiphase acquisition is used for vascular applications only.

During multiphase acquisition, you have direct control over the acquisition speed and duration. The acquisition is separated into a maximum of three phases and is used when a constant frame rate is not needed throughout the duration of the exposure.

You can adjust the duration of each phase in seconds and the image speed in frames per second. You may also switch between the second and third phases, if you want to slow the frame rate down or speed it up during long acquisition runs.

Multiphase acquisition is usually enabled automatically for the appropriate X-ray protocols. This is configured when the system is installed.

NOTE ***The image speed (frame rate) is limited by the image speed chosen in the Multiphase Acq. settings in the X-ray Settings task.***



1 Select the **X-ray Settings** task in the acquisition window or on the touch screen module.

2 Select the desired procedure.

3 Start acquisition.

When X-ray is active, the controls to adjust the image speed and phase duration are not displayed. These are replaced by a phase button, displaying the selected image speed for each phase.

4 To move between phases and change the image speed, tap the desired phase button.

Images are acquired at the new image speed shown for the selected phase.

You can only switch to a phase if the relevant phase button is enabled.

6.12.1 Changing Multiphase Acquisition Settings



1 Select the **X-ray Settings** task on the touch screen module.



2 On the touch screen module, tap **Multiphase Acq.** to display the multiphase acquisition settings screen.

3 Set the image speed (frame rate) in frames per second, for each phase:

- Tap **+** to increase the image speed.
- Tap **-** to decrease the image speed.

4 Set the duration of each phase.

- Tap **+** to increase the duration.
- Tap **-** to decrease the duration.

The phase duration is displayed in seconds.

5 If desired, tap **Coupling** to switch injector coupling on.

6 Set the X-ray delay time in seconds.

For more information about acquiring images using multiple phases, including changing the image speed during acquisition, see *Multiphase Acquisition* (page 99).

6.13 Bolus Chase

You use the Bolus Chase procedure to acquire images of the vessels in the lower extremities. You control the speed of the table as you chase the contrast bolus down the legs.

You acquire a Bolus Chase run with contrast using the Flexible Dynamic Peripheral Angiography (FDPA) procedure. If desired, you can acquire a mask run without contrast after the Bolus Chase run. After acquisition, the Bolus Chase Reconstruction application automatically reconstructs the images for review. For more information, see *Bolus Chase Reconstruction* (page 125).

The following guidance is recommended for acquiring a Bolus Chase run:

- Use peripheral X-ray filters for optimal image quality. For more information, see *Peripheral X-ray Filters* (page 194).
- To improve the accuracy of the reconstruction, place a Bolus Chase Reconstruction ruler in the view, parallel to the table, during acquisition.
- At least five contrast images are required to create a reconstruction.

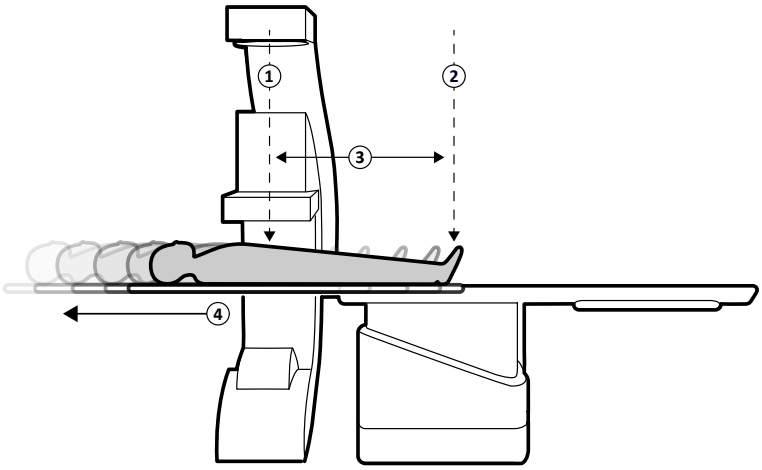

Figure 57 Bolus Chase table positions and movement

Legend			
1	Start position	3	Table travel distance (maximum 100 cm / 39.4 in)
2	End position	4	Table movement

6.13.1 Acquiring a Contrast Run

To acquire a contrast run for Bolus Chase Reconstruction, you chase the contrast bolus along the patient's legs.

Before starting the procedure, ensure that the C-arm is positioned at either the nurse or doctor side and that all objects have been cleared from the table path.

1 Park the lateral stand in the parking position.

2 Position the patient on the table.

For more information, see *Positioning the Patient on the Table* (page 54).

3 Position the peripheral X-ray filters.

For more information, see *Peripheral X-ray Filters* (page 194).

4 Immobilize the patient's legs.

5 To select the Bolus Chase X-ray protocol, do the following.



a On the touch screen module, tap the **X-ray Settings** task.

The X-ray protocols displayed are the ones associated with the currently selected ProcedureCard.

b Tap **Bolus Chase**.

If **Bolus Chase** is not visible in the list of X-ray protocols, tap **Other**, select **Peripherals**, and then select **Bolus Chase** from the full list of available X-ray protocols.



6 If your system has a rotatable detector, position the detector in landscape or portrait position.



7 To allow you to raise the table to its highest position, raise the detector to the highest possible position.



8 Raise the table to the maximum height.



9 Set the field of view to the maximum size.

10 Center the region of interest at the start position.



11 Reduce the distance between the patient and the detector to the minimum possible.

12 Lock lateral movements of the table by doing the following:

a On the touch screen module, tap the **Table** task.

b Tap **Lateral** to switch the lateral table lock on.

13 Use fluoroscopy to confirm that the patient is in the correct position, by moving the table from the start position to the end position.

14 If necessary, adjust the patient's lateral position by moving the patient on the tabletop.

NOTE ***Do not unlock table lateral movements.***

15 Reposition the table longitudinally at the start position.

16 Switch **Injector Coupling** on.

For more information, see *Injector Coupling* (page 97).

17 Prepare the injector.

18 Start acquisition by pressing and holding the hand switch.

NOTE ***BodyGuards are disabled during image acquisition.***

19 When the contrast bolus reaches the bottom of the image on the monitor, start moving the tabletop using the speed controller.

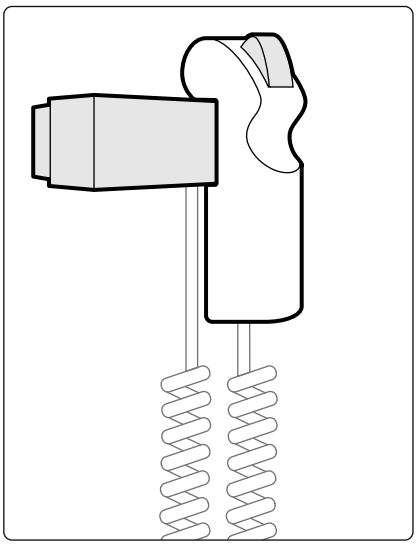

Figure 58 Speed controller

20 Use the speed controller to control the speed of the table so that the contrast bolus remains close to the bottom of the image.

The speed controller is proportional; the harder you press the switch, the faster the table top moves.

21 Release the speed controller when the contrast reaches the patient's feet.

22 Stop the acquisition by releasing the hand switch when the contrast bolus arrives.

After acquiring a contrast run, Bolus Chase Reconstruction is started in the review window and the acquired images are reconstructed. For more information, see *Bolus Chase Reconstruction* (page 125).

6.13.2 Acquiring a Mask Run (Optional)

Acquiring a mask run allows you to view subtracted images in Bolus Chase Reconstruction.

1 For optimal subtraction results, ensure that the patient remains immobilized as much as possible during the whole procedure.

2 After acquiring the contrast run, wait 30-60 seconds before acquiring the mask run to reduce the possibility of imaging venous filling.

3 Press and hold the speed control hand switch until the table has returned to the start position.

4 Start acquisition by pressing and holding the hand switch.

The tabletop automatically repeats the movement from the contrast run.

5 Release the hand switch when the exposure stops.

Exposure stops automatically when the same number of images have been acquired as during the contrast run.

Bolus Chase Reconstruction automatically uses the mask run to display subtracted images.



6 While reviewing the run, you can use **Subtraction On / Off** to view subtracted images or contrast images.

You can acquire additional mask runs, if desired.

6.14 Roadmap Pro

Roadmap Pro allows you to superimpose a mask image of the vessel tree to improve visibility of catheters, devices, and materials.

Roadmap Pro is 2D subtracted fluoroscopy and is acquired in two phases:

- The first phase is the vessel mask. This is used to create the mask onto which the live fluoroscopy is superimposed.
- The second phase is the device phase. This phase is to view the device, for example a catheter, wire, or coil, under fluoroscopy over the vessel mask.

To ensure that the subtracted fluoroscopy image is not disturbed by unintentional movement of the tabletop or C-arm during a critical procedure, you should lock the table and geometry movements during Roadmap Pro. For more information, see *Locking and Unlocking C-arm and Table Movements* (page 92).

WARNING
Misinterpreting still images as live images could lead to serious patient injury. When images displayed are live, the following icon is displayed:



In a biplane system, the X-ray status icon is displayed for each channel.

WARNING
When using overlay images in a procedure, you should ensure that the overlay image and the main image are properly aligned. Misaligned images may cause clinical misdiagnosis or clinical mistreatment.

6.14.1 Using Roadmap Pro

Using Roadmap Pro, you can produce a vessel map to use with live fluoroscopy.

You can do this using the touch screen module or the acquisition window.



1 Select the **X-ray Settings** task.



2 If you are using the touch screen module, tap **Roadmap** to open the **Roadmap** menu.

3 To switch Roadmap on, do one of the following:



- On the touch screen module, tap **Roadmap**.
- In the acquisition window, click the **Roadmap** expander in the task panel and click **On**.



- Press **Roadmap** on the control module.

4 To select the clinical mode, do one of the following:

- On the touch screen module, tap the desired **Mode** name.
- In the acquisition window, select the mode from the **Mode** list in the task panel.

5 Start fluoroscopy.

For more information, see *Performing Fluoroscopy* (page 83).

6 When the subtracted image is created, inject the contrast.

For more information, see *Injector Coupling* (page 97).

7 Stop fluoroscopy when the vessel tree is fully visible (maximum opacification).

8 To adjust the transparency of the image, tap **+** or **-** on the touch screen module for the following masks:

- **Vessel**
- **Device**

NOTE ***You can only adjust transparency when fluoroscopy is not active.***

9 Start fluoroscopy for the clinical procedure.

10 Insert the device when the subtracted vessel map is visible.

6.14.2 Using SmartMask

SmartMask allows you to use a previously acquired image as a vessel mask.

You can choose the image that you want to use for SmartMask. SmartMask images must have the same projection and source-to-image distance settings as the current acquisition settings, but they can be from a different series for the same patient.

1 Identify the series containing the desired image and open the series for review.

For more information, see the following sections:
- *Reviewing a Series using the Review Window* (page 119)
- *Reviewing a Series using the Touch Screen Module* (page 120)

2 Select the image for the vessel mask in the acquisition window using the touch screen module or the viewpad.

3 When the desired image is displayed in the live window, enable SmartMask by doing one of the following:



- On the control module, press **SmartMask**.



- In the **X-ray Settings** task on the touch screen module, select **Roadmap** and then select **SmartMask**.

4 Start fluoroscopy.

For more information, see *Performing Fluoroscopy* (page 83).

After subtraction, the current image is set as the SmartMask image.

5 Insert the device.

6.15 ECG Triggering

ECG triggering allows you to acquire images in the same phase of the heart cycle. The ECG signal is used to generate the ECG trigger pulses with an adjustable delay.

To be able to start ECG triggered exposure or fluoroscopy, establish a proper ECG signal. The system is ready to start, but waits a limited period of time for an ECG signal. The system does not generate X-ray before the ECG signal is recognized. ECG triggering is only applicable for fluoroscopy and a limited set of exposure procedures.

NOTE ***For Single Shot triggering, only one image is generated this way.***

By default, ECG triggering is not activated. Once activated, the settings remain valid until switched off or a new patient is selected. Selecting a procedure that is not supported by ECG triggering, for example, Rotation scan or Bolus Chase, automatically deactivates ECG triggering and the controls in the ECG triggering task panel are unavailable.

When ECG triggering is activated, the system monitors the trigger pulses (also during standby). If for any reason the trigger pulses are not present for 2 seconds or more, the system message **ECG signal absent** is displayed. The system message is removed when the trigger pulses are present again, or when ECG triggering is deactivated.

NOTE ***A system message is also displayed 2 seconds after every trigger pulse, when the heart rate is less than 30 bpm.***



1 Select the **X-ray Settings** task.

2 If you are using the acquisition window, do the following:

a Click the expander in the control panel relating to the type of procedure you are performing (**Fluoroscopy** or **Exposure**).

If the X-ray protocol you are using supports ECG triggering, the **ECG-Triggering** expander is displayed.

b Expand the **ECG-Triggering** expander.

c To switch ECG triggering on, click **On**.

3 If you are using the touch screen module, do the following:



a Tap **More** and select **ECG Triggering**.

The **ECG-Triggering** task panel is displayed.

b Tap either **Fluoro ECG** or **Exposure ECG**, to switch the desired function on.

The system replaces the fluoroscopy flavor indication or the exposure run speed indication in the live window with the ECG indication.

NOTE ***For 'Single Shot' procedures, the indication in the live window remains as 'Single Shot'.***

If injector coupling is on, it is automatically switched off.

4 Increase or decrease the **Trigger Delay** time as appropriate.

The accuracy of the delay time is limited. The selected delay should relate to the current heart rate of the patient and desired heart rate phase, for example, end diastole or end systole.

5 Initiate fluoroscopy or exposure as appropriate for the selected ECG triggering.

The controls on the touch screen module are unavailable during fluoroscopy and exposure.

Images are acquired according to the current heart rate of the patient. After every R-top of the ECG signal plus the selected trigger delay, one image is acquired. If another trigger pulse is received during the delay period, (for example, when the ECG signal is too high) then that trigger pulse is ignored.

6 On completion of the selection or adjustment, tap X to close the task panel.

6.16 Rotation Scans

Rotation scans, or 3D-Rotational Angiography (3D-RA), are used to acquire a 3D perception of vessel anatomy.

Fixed rotation scans are predefined and you cannot alter the start and end positions.

A free rotation scan can be acquired from either the head end or from the doctor or nurse sides. You can define the start and end position of a free rotation scan within the constraints of the rotation scan session.

Free rotation scans start with setting the start and end positions. Rotation scans can be subtracted by acquiring two runs. Best practice is to acquire a mask run followed by a contrast run.

NOTE ***BodyGuard sensors are switched off during a rotation scan.***

6.16.1 Performing a Fixed Rotational Scan

You can perform a fixed rotational scan to provide a 3D image of the vessel.

In a fixed rotational scan, the start and end positions are predefined.

1 Position the region of interest in the isocenter.

For more information, see *Isocentering* (page 92).



2 Select the **X-ray Settings** task on the touch screen module.

3 Select the rotational scan X-ray protocol you want to use.

Step 1 **Settings** of the rotational scan wizard is displayed.

4 Select the detailed settings for the X-ray protocol in the **Settings** step.



5 From the control module, position the detector in landscape or portrait position.



6 Select the maximum source-to-image distance.



7 Select the desired field of view.

8 Clear all objects from the rotational arc of the C-arm.



9 Switch **Injector Coupling** on or off as desired.

a If you switch **Injector Coupling** on, set the X-ray **Delay** time.

10 Tap **Next** on the touch screen module.

Step 2 **End position** of the rotational scan wizard is displayed.



11 Press **Accept** on the control module to move to the fixed end position.

Step 3 **Start position** of the rotational scan wizard is displayed.



12 Press **Accept** on the control module to move to the fixed start position.

13 If injector coupling is switched on, prepare the injector.

14 Start acquisition using the exposure hand switch or the exposure foot switch pedal, and hold until the exposure stops.

NOTE ***BodyGuard is disabled during image acquisition.***

6.16.2 Performing a Free Rotational Scan

You can perform a free rotational scan to provide a 3D impression of a vessel based on 2D images.

In a free rotational scan, you can define the start and end positions.

1 Position the C-arm in the desired work position.

2 Position the region of interest in the isocenter.

For more information, see *Isocentering* (page 92).



3 Select the **X-ray Settings** task on the touch screen module.

4 Tap **Rotational Scan**.

Step 1 **Settings** of the rotational scan wizard is displayed.



5 From the control module, position the detector in landscape or portrait position.



6 Select the maximum source-to-image distance.



7 Select the desired field of view.

8 Clear all objects from the rotational arc of the C-arm.

9 If you are performing a cardiac rotational scan, select the desired rotation setting.



10 Switch **Injector Coupling** on or off as desired.

a If you switch **Injector Coupling** on, set the X-ray delay time.

11 Tap **Next** on the touch screen module.

Step 2 **End position** of the rotational scan wizard is displayed.

12 To set the end position, do one of the following:



- Press **Accept** on the control module to move to the default end position.
- Position the C-arm using the control module and select **Next** to set the end position.

Step 3 **Start position** of the rotational scan wizard is displayed.

13 To set the start position, do one of the following:



- Press **Accept** on the control module to move to the default start position.
- Position the C-arm using the control module and select **Next** to set the start position.

14 Tap **Done** to close the wizard.

15 If injector coupling is switched on, prepare the injector.

16 Start acquisition using the exposure hand switch or the exposure foot switch pedal, and hold until the exposure stops.

NOTE ***BodyGuard is disabled during acquisition.***

6.16.3 XperCT

The XperCT procedure consists of a rotational scan. The acquired images are automatically sent to the Interventional Workspot.

The XperCT procedure is available only on systems fitted with the 20-inch flat detector.

For biplane systems, XperCT is only available on the frontal channel.

For information about XperCT calibration, see *XperCT Calibration* (page 266).

To be able to use XperCT, the table should be positioned within the following ranges:

- Table Tilt Angle: -1 to 1 degrees
- Table Cradle Angle: -5 to 5 degrees
- Table Pivot Angle:
  - -5 to 5 degrees
  - 175 to 185 degrees
  - -175 to -185 degrees
- Table Swivel Angle:
  - -1 to 1 degrees
  - 179 to 181 degrees
  - -179 to -181 degrees

NOTE ***Depending on your version of the Interventional Workspot, it may be possible to acquire the rotational scan with a tilted and cradled table.***

NOTE ***You must be logged on to the Interventional Workspot before starting the acquisition. We recommend that you switch the workstation on and log on at the start of your work schedule to avoid a delay.***

NOTE ***BodyGuard is disabled during image acquisition.***

1 Position the stand in the working position.

2 Position the region of interest in the isocenter.

For more information, see *Isocentering* (page 92).



3 Select the **X-ray Settings** task.

4 Select the XperCT procedure.

For more information, see *XperCT Procedure Selection* (page 108).



5 From the control module, position the detector in the landscape position.



6 Select the maximum source-to-image distance.

7 Clear all objects from the rotational arc of the stand.

8 Follow the instructions given on the touch screen module to confirm the end position.

9 Follow the instructions given on the touch screen module to confirm the start position.

10 Instruct the patient.

11 To start acquisition, press the hand switch or foot switch until exposure stops.

XperCT Procedure Selection

Protocol	Speed [fps]	Duration [s] (approximate)	Position	Contrast
XperCT HQ 30fps -21s	30	21	Head	High
XperCT LD 30fps -10s	30	10	Head	Low
XperCT HQ 60fps -10s	60	10	Head	High
XperCT LD 60fps -5s	60	5	Head	Low
CT Cranial Stent 48 cm / 19"	30	21	Head	High
CT Cranial Stent 27 cm / 10.5"	30	21	Head	High
CT Cranial Stent 22 cm / 8.5"	30	21	Head	High
XperCT Prop (open) HQ - 5s	60	5	Head	High

Protocol	Speed [fps]	Duration [s] (approximate)	Position	Contrast
XperCT Dual Prop (open) HQ -5s	60	5	Head	High
XperCT Prop (open) LD - 5s	60	5	Head	Low
XperCT Dual Prop (open) LD - 5s	60	5	Head	Low
XperCT Prop open - 4s	60	4	Head	Low
XperCT Roll - 8s	60	8	Side	High
XperCT Dual Roll - 8s	60	8	Side	High
VasoCT I.A. 22 cm / 8.5"	30	21	Head	High
VasoCT I.A. 27 cm / 10.5"	30	21	Head	High
VasoCT I.V. 22 cm / 8.5"	30	21	Head	High
VasoCT I.V. 27 cm / 10.5"	30	21	Head	High
HD = High Dose, LD = Low Dose, ( ) = optional				

NOTE ***Some of these application protocols may not be available, depending on the X-ray equipment in use and the purchased options.***

6.16.4 XperCT Dual

The XperCT Dual procedure is a dual phase scan that consists of a forward phase and a backward phase. The acquired images are automatically sent to the Interventional Workspot.

Contrast is used during the forward phase of the scan to visualize the arteries. After a brief pause, known as the scan interval, the backward phase is acquired. While the contrast medium has washed out of the arteries, the lesion holds the contrast medium for slightly longer, allowing the lesion to be visualized in the backward phase.

For information about XperCT calibration, see *XperCT Calibration* (page 266).

NOTE ***You must be logged on to the Interventional Workspot before starting the acquisition. We recommend that you switch the workstation on and log on at the start of your work schedule to avoid a delay.***

NOTE ***If the exposure switch is released after the forward scan, the backward scan is canceled.***

NOTE ***BodyGuard is disabled during image acquisition.***

1. Position the stand in the working position.
2. Position the region of interest in the isocenter.

   For more information, see *Isocentering* (page 92).



3. Select the **X-ray Settings** task.
4. Select the XperCT Dual Phase procedure.
5. Adjust the interval time if desired.



6. From the control module, position the detector in the landscape position.



7. Select the maximum source-to-image distance.
8. Clear all objects from the rotational arc of the stand.



9. Switch **Injector Coupling** on or off as desired.
   a. If you switch **Injector Coupling** on, set the X-ray delay time.

10 Follow the instructions given on the touch screen module to confirm the end position.



11 Press **Accept** on the control module to move to the end position.

12 Follow the instructions given on the touch screen module to confirm the start position.



13 Press **Accept** on the control module to move to the start position.

14 Instruct the patient about the breathing procedure.

15 Start acquisition.

16 Continue to hold the exposure switch at the end of the forward phase.

17 Using the counter displayed in the live X-ray window or the acquisition window as a guide, instruct the patient to breathe during the interval time, and to hold their breath at the beginning of the backward phase.

18 At the end of the backward phase release the exposure hand or foot switch.

6.16.5 CardiacSwing

CardiacSwing provides a dual-axis rotation for either the left or right coronary artery. The acquisition run combines both rotation and angulation movement of the C-arm, which covers most of the routine coronary projections in a single sweep.

Dedicated X-ray protocols for the left and right coronaries are included in the system. CardiacSwing is used with the C-arm positioned for a cardiac study.

Contrast medium can be injected either manually or via an injector, care should be taken that contrast is present throughout the coronary tree for the duration of the swing.



1 Rotate the detector to the landscape position (C20/F20 systems).



2 Select the maximum source-to-image distance



3 Select the desired field of view.

4 Center the region of interest in the lateral position.

You may find it helpful to set this position as the isocenter so you can recall it later.

5 Center AP: position the catheter tip in left upper quadrant of the detector.

6 Clear all objects from the rotational arc of the C-arm.



7 Select the **X-ray Settings** task on the touch screen module.

8 Tap **CardiacSwing** in the list of available X-ray protocols.

If **CardiacSwing** is not visible in the list of X-ray protocols associated with the currently selected ProcedureCard, select the **Cardiac** settings and tap **CardiacSwing**.

9 Select the desired detailed settings.

For more information, see *CardiacSwing Procedure Selection* (page 111).

10 If you are using an injector, do the following:

a Tap **Injector Coupling** to switch injector coupling on.

b Set the X-ray delay time.

11 Tap **Next**.

12 Press and hold **Accept** on the control module until the C-arm reaches the end position.

13 Press and hold **Accept** on control module until the C-arm reaches the start position.

14 If injector coupling is switched on, prepare the injector.

The system is now ready to acquire images.

15 Instruct the patient.

16 Start acquisition by pressing the hand switch until exposure stops.

NOTE ***BodyGuards are disabled during image acquisition.***

CardiacSwing Procedure Selection

For CardiacSwing procedures, the recommended field of view is 30 cm (11.6 inch) for C12/F12 systems, and 27 cm (10.5 inch) or greater for F15 and C20/F20 systems.

To optimize imaging, the artery should be filled from first to last image of the swing procedure. It is recommended to begin the injection 0.5 seconds prior to acquisition of the first image. If you are using a power injector set an X-ray delay time on the system for 0.5 seconds.

All procedures are performed with the following settings:
- C-arm position: head end
- Framerate: 15 fps or 25 fps

Procedure	Exposure Time [seconds]	Injection Duration [seconds]	Clinical Area
LCA CRA 30 5s	5.3	5.8	Left coronary
LCA CRA 35 5s (Best practice)	5.8	6.3	Left coronary
LCA CRA 40 5s *F12 system only*	5.8	6.3	Left coronary
RCA LAO 3s	3.7	4.2	Right coronary
RCA AP 4s (Best practice)	4.1	4.5	Right coronary
LCA/RCA RAO-CAU -> LAO-CRA 4s	4.1	4.6	Left coronary Right coronary Grafts
LCA/RCA LAO-CAU -> RAO-CRA 4s	4.1	4.6	Left coronary Right coronary Grafts

LCA Trajectories

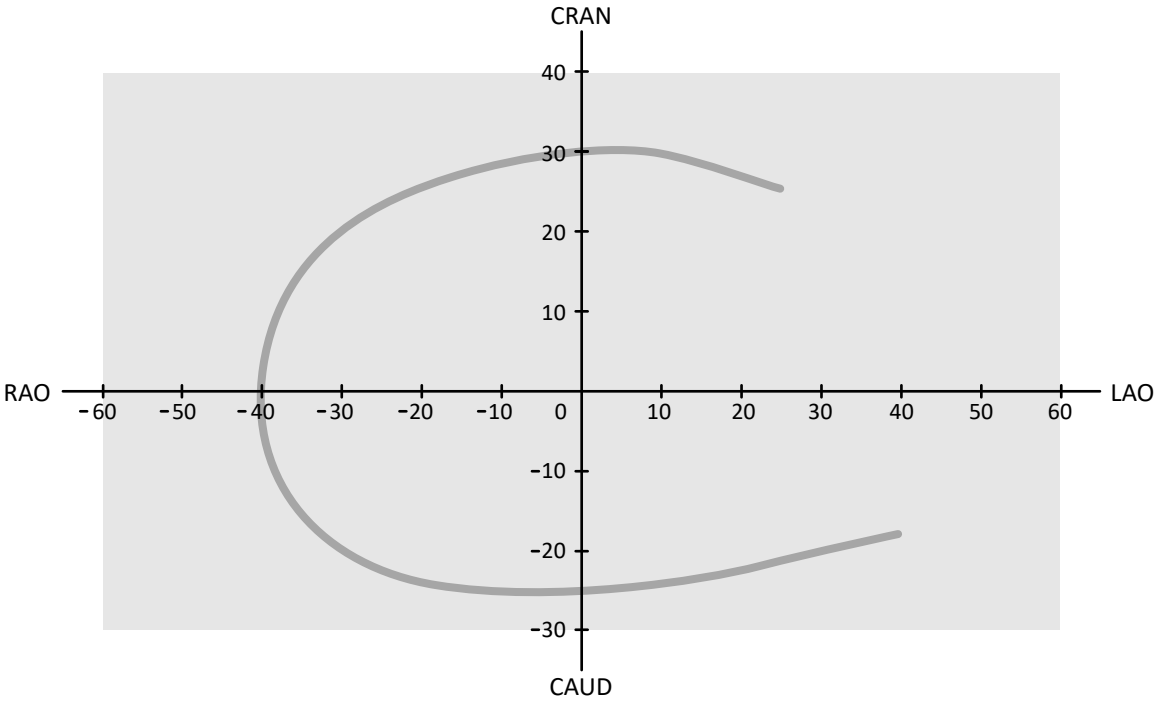

Figure 59 Small curve for all patients: **LCA CRA 30 5s**

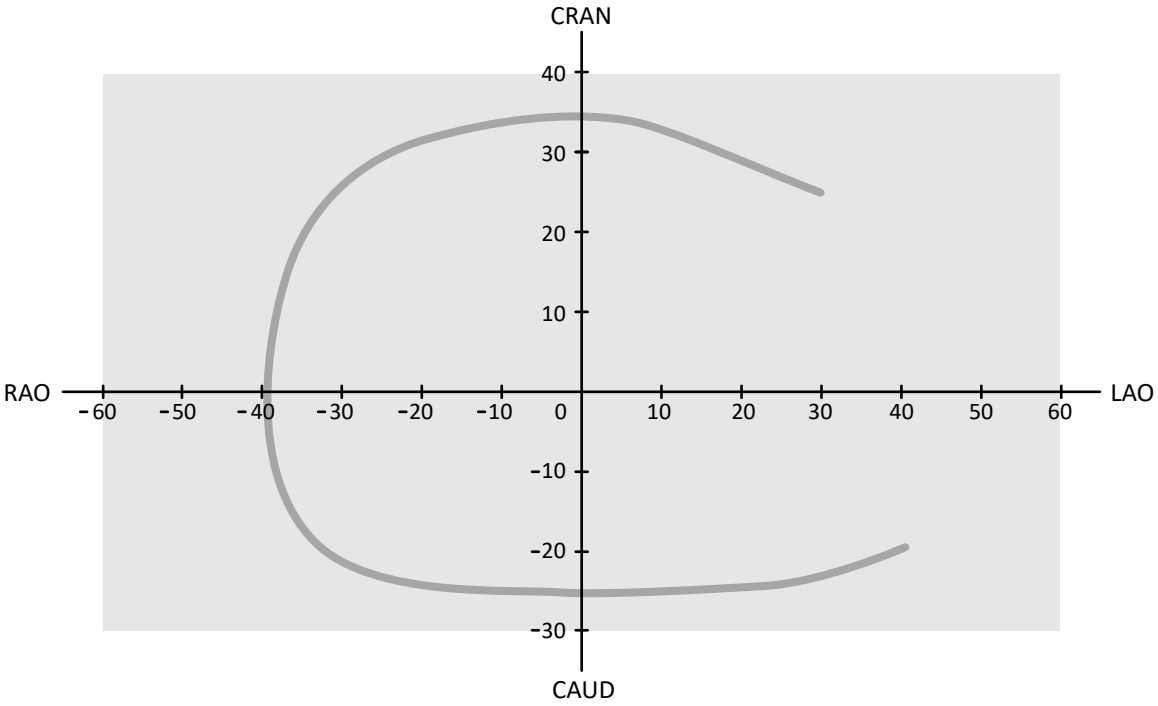

Figure 60 Medium curve for all patients: **LCA CRA 35 5s** (best practice for LCA)

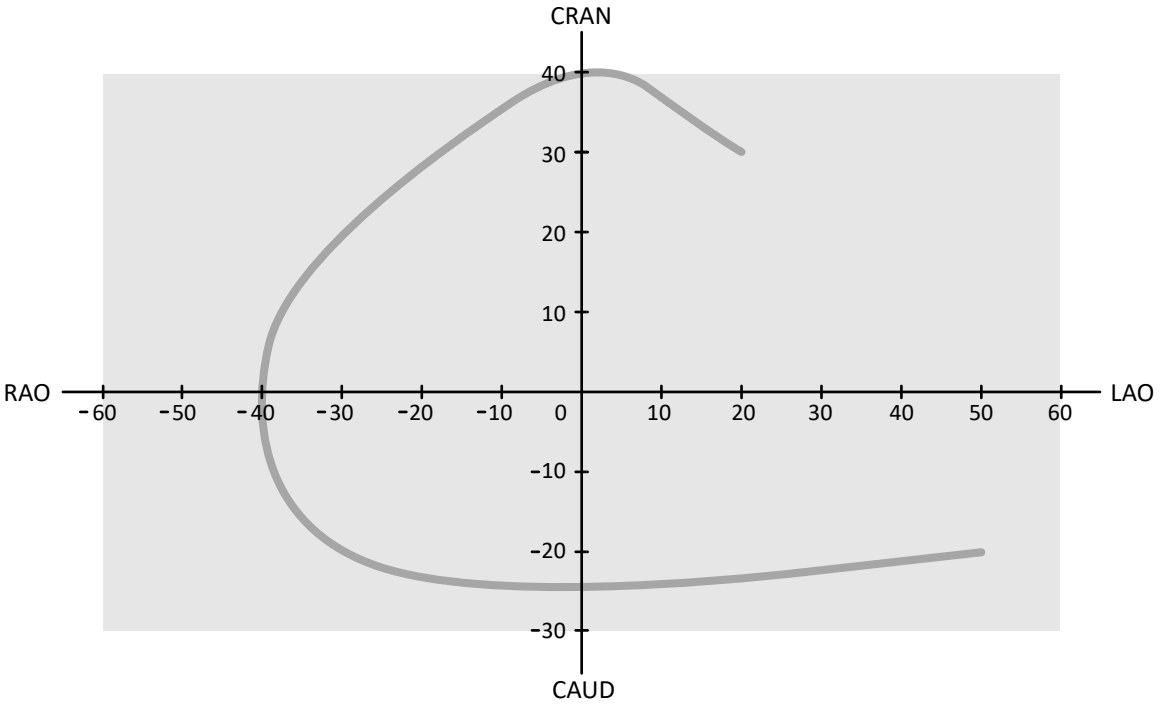

Figure 61 Large curve for normal or thin patients: **LCA CRA 40 5s**

RCA Trajectories

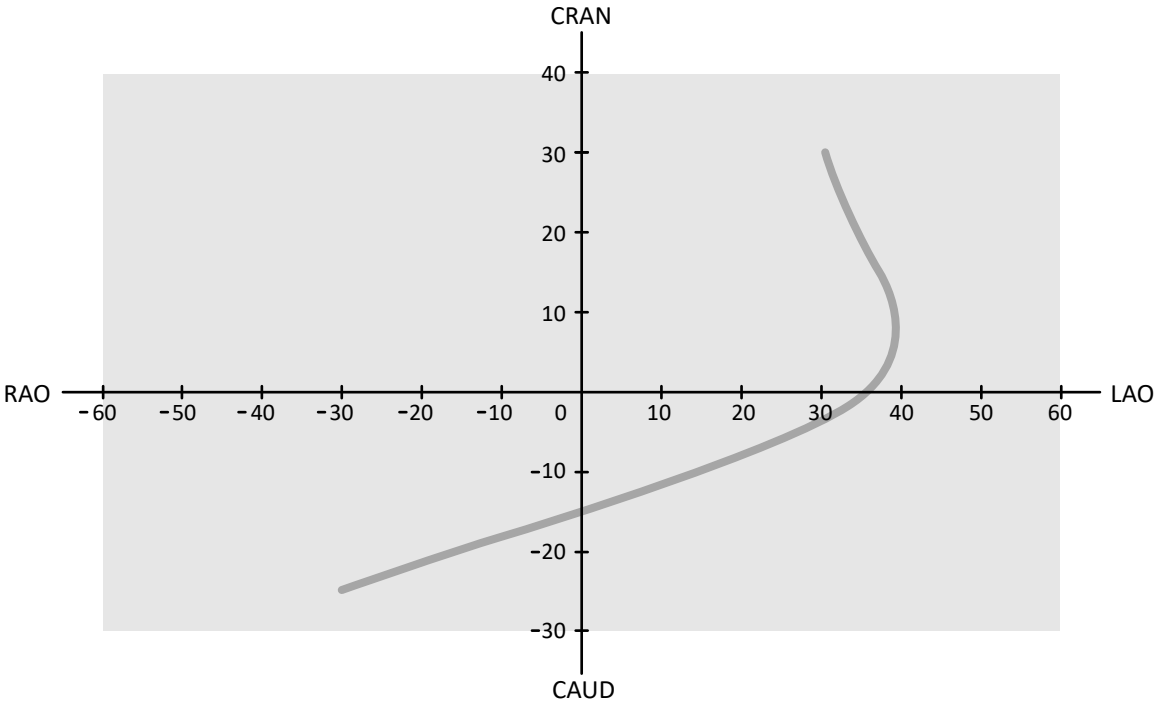

Figure 62 Standard curve for all patients: **RCA LAO 3s**

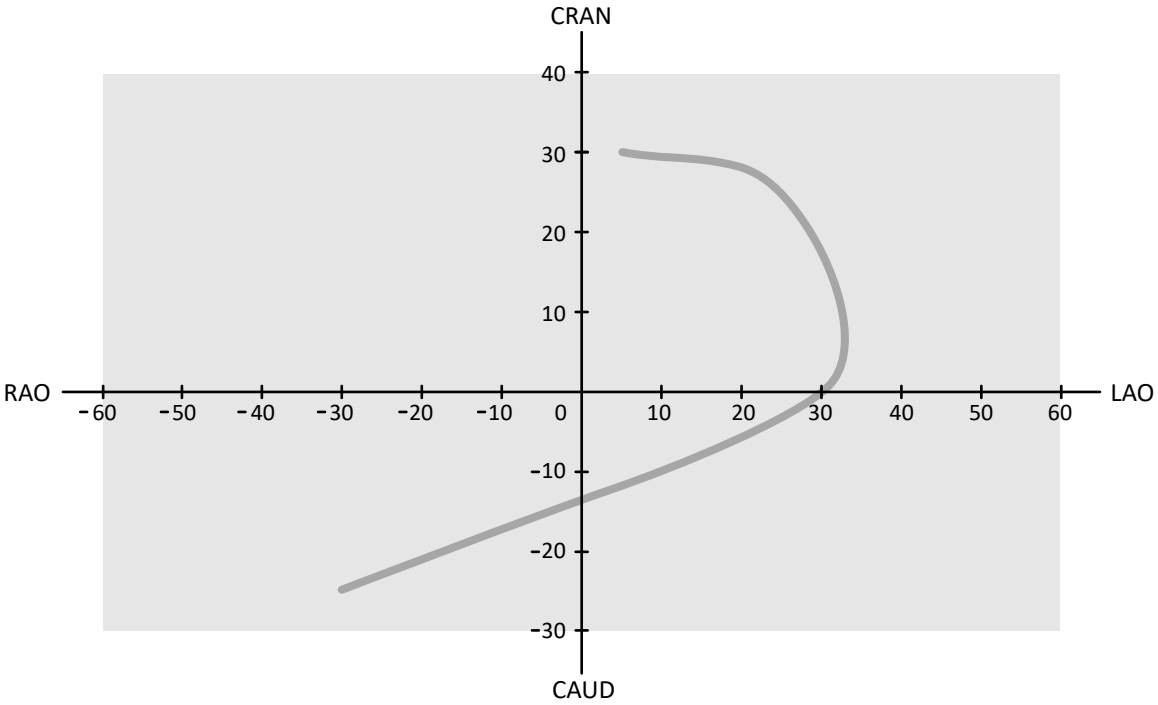

Figure 63 Standard curve for all patients: **RCA AP 4s**

LCA, RCA, and Graft Trajectories

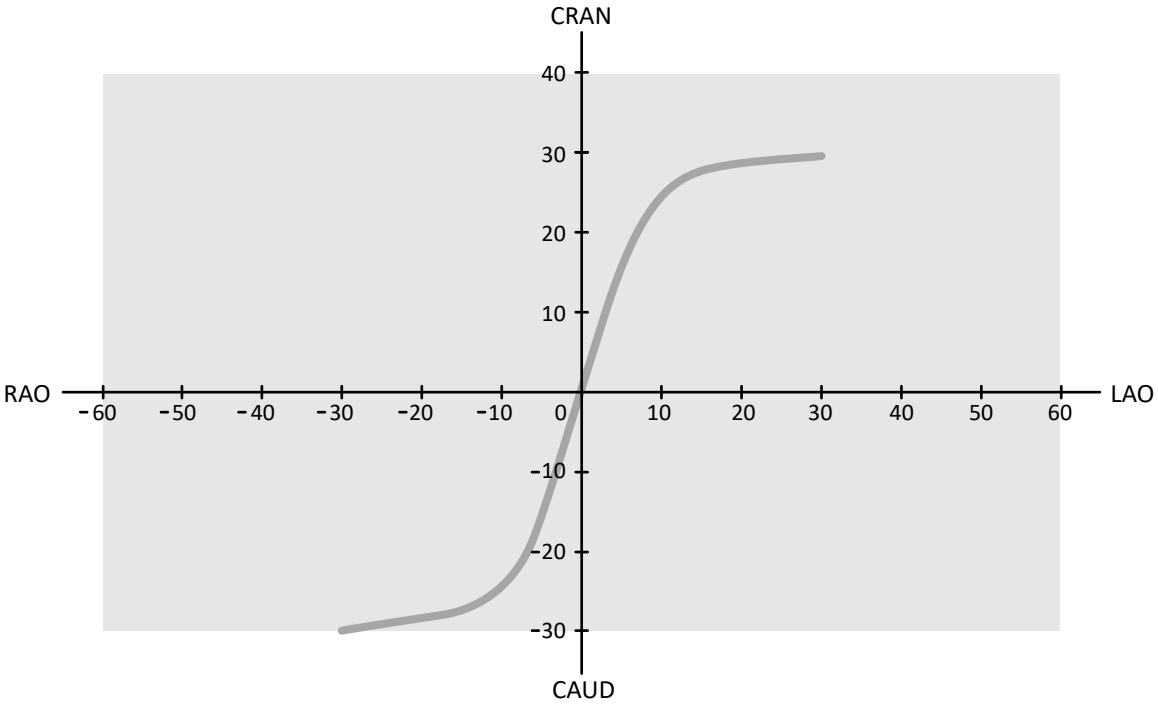

Figure 64 Swing for coronary and grafts: **LCA/RCA RAO-CAU -> LAO-CRA 4s**

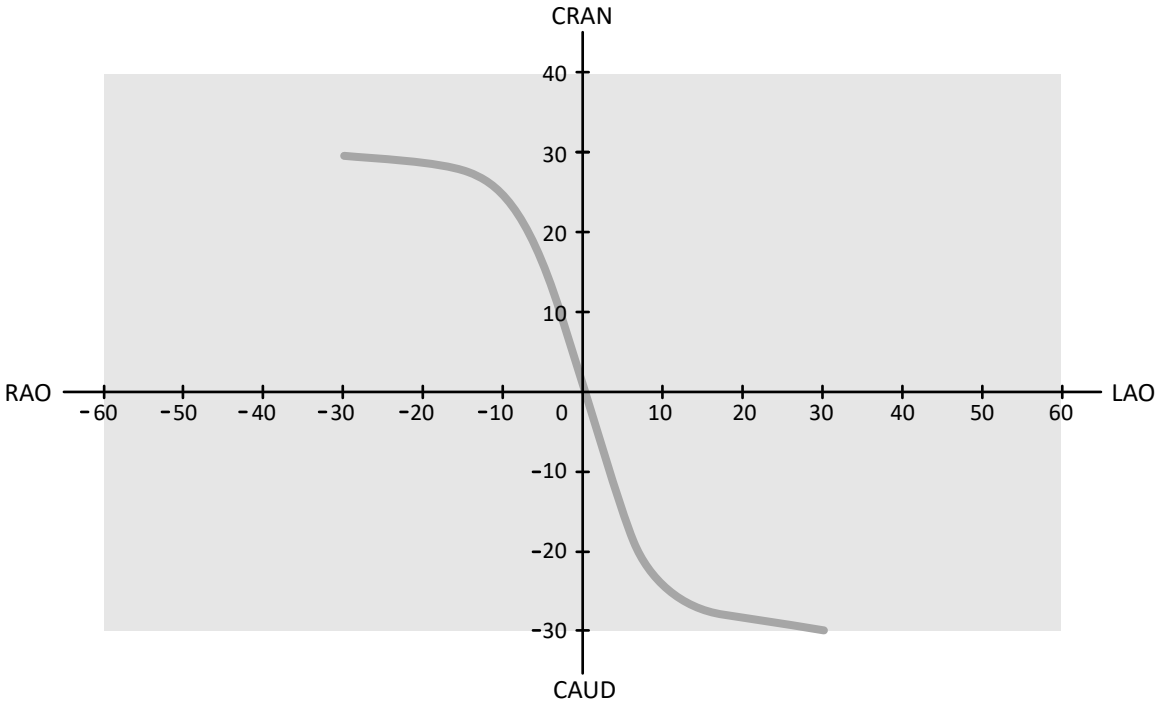

Figure 65 Swing for coronary and grafts: **LCA/RCA LAO-CAU -> RAO-CRA 4s**

6.17 Electrophysiology Procedures

Biosense ElectroPhysiology

CAUTION
Do not use images acquired using a Biosense procedure for diagnostic purposes. These images are for non-diagnostic viewing only.

6.18 Previewing Series and Images for Automatic Archiving

If your system is configured to do so, series and images are automatically archived when you end a study.

You can preview the series and images that will be automatically archived at any time. For more information, see *Configuring Automatic Data Transfer* (page 244).

1 Click **Archive Preview** in the global tools panel.

A dialog box is displayed showing the series and images to be archived.

If there is more than one archive destination, the dialog box displays a section for each specific archive destination and the series and images to be archived to that destination.

The following icons indicate whether the whole series or only some images in the series are to be archived.

Icon	Description
	The series will be archived

Icon	Description
	Only some images in the series will be archived

2 To exclude a series from archiving, select the series and click **Exclude**.

You can select multiple series for exclusion. When a series is excluded, a message is displayed on the pictorial and the pictorial image is dimmed.

NOTE ***Excluded series can be exported manually.***



3 To undo any changes that you have made and start again, if desired, click **Undo Changes**.

4 Click **Done** to save your changes and close the dialog box.

6.19 Ending a Study

When you end a study, you can choose which status to apply to each of the procedure steps performed within the study.

When you end a study, the system may be configured to automatically archive series and images associated with the study. You can check which series and images will be archived before you end the study.

You can only end a study from the acquisition window.

1 To end the study, do one of the following:



- Click **End Procedure** in the acquisition window.
- Click **End Procedure** in the patient database, if the patient database is open.

A dialog box is displayed and you are prompted to select how to end the study.

The dialog box displays the steps performed in the study.

2 For each procedure step performed, select a status.

If no X-ray images have been acquired in the study, the following options are available:

- **Complete**
- **Keep Scheduled**

If X-ray images have been acquired, the following options are available:

- **Complete** (displayed only when MPPS is not configured)
- **Discontinue** (displayed only when MPPS is configured)
- **Suspend**

3 If you selected **Discontinue** for one or more procedure step, select the appropriate reason for discontinuing each discontinued step.



4 To preview the series and images that will be archived when you end the study, click **Archive Preview**.

A dialog box is displayed showing the series and images that will be archived. For more information, see *Previewing Series and Images for Automatic Archiving* (page 115).

5 To end the study, click **OK**.

6.20 Dose Reports

Dose reports can be created automatically when a study is completed. A dose report contains dose information for each series and for the whole study.

DICOM Radiation Structured Dose Report
A DICOM radiation structured dose report is created automatically when a study is completed. This report cannot be viewed on the system, but it is automatically exported to a network destination (for example, a workstation that can display structured reports). For more information, see *Configuring Automatic Data Transfer* (page 244).

Secondary Capture Dose Report
A secondary capture dose report is a photo image of a dose report. This type of dose report is created automatically if your system is configured to do so. For more information, see *Changing General Patient and Workflow Settings* (page 235).



A secondary capture dose report is stored with the study and is identified by a report pictorial in the task panel. It can be viewed on the system and printed. You can also export the dose report to a network destination or storage device. For more information, see *Exporting Data* (page 149). Additionally, secondary capture dose reports are automatically exported to a network destination. For more information, see *Configuring Automatic Data Transfer* (page 244).

6.20.1 Viewing a Secondary Capture Dose Report

You can view a secondary capture dose report in the viewing application in the review window.

To view a dose report, you must complete the associated study.

Dose reports are saved when a study is completed. They are saved as photo images and are available to view in the **Series** task control panel.

1 Load the desired patient study.

2 Select the **Series** tab in the control panel.

3 Select **All Images** or **Photo images** in the image selector drop-down list.



4 Click the dose report pictorial in the image list.

The dose report is displayed in the viewer.

6.20.2 Printing a Secondary Capture Dose Report

Secondary capture dose reports are created as images and can be printed.



The dose report for a procedure is available as a pictorial in the task panel.

1 To add the dose report to the print preview, do one of the following:



- Select the dose report pictorial in the control panel and click **Add to Print Preview** in the global tools panel.



- Right click on the dose report pictorial in the control panel and select **Add Series to Print Preview**.



2 To launch the print application, click **More Tools** and then select **Print Preview**.

The print application is launched and a preview of the report is displayed, including the dose report.

3 Compile any other desired elements of the report.



4 Click **Print** to print the report.

7 Reviewing

You can review a series or an image in the examination room using the viewpad or the optional mouse, or in the control room using the mouse or the review module.



You select a series or image for review using the pictorial index in the **Series** task in the acquisition window, the review window, or on the touch screen module.

Series are listed in a pictorial index. A yellow border around a pictorial indicates that this is the displayed image or series in the main display area. Biplane series are always displayed with the frontal series and lateral series side by side in the **Series** task. When you select a biplane series, the corresponding series on the other channel is also selected.

If the pictorial display area is not sufficient to display all the pictorials, a slide bar appears to the side of the display which you use to scroll through the pictorials. You can also apply a filter In the **Series** task navigation panel to find the series you are looking for.

If the X-ray protocol is configured to do so, after acquiring a series the series is displayed in the main display area, automatically replaying the images in the series.

For fluoroscopy, if the X-ray protocol is not configured to automatically replay the series, the last image acquired in the series is displayed. This is the last image hold function.

NOTE ***When handling personal data, do so in accordance with the privacy policies that apply in your healthcare environment and privacy laws that apply in your region.***

For more information, see the following sections:

- *Windows, Panels, Views, and Viewports* (page 424)
- *Acquisition Monitor* (page 389)
- *Review Monitor* (page 391)
- *Review Module* (page 417)
- *Viewpad* (page 419)

7.1 Instant Parallel Working

While acquisition is being performed in the examination room, you can use the review window in the control room to work in parallel and perform tasks such as reviewing and post-processing, for any study, including studies and series that do not relate to the acquisition patient.

You select a study or series for review in the same way for non-acquisition patients as for the acquisition patient. For more information, see *Reviewing a Series using the Review Window* (page 119).

When you review a study or series that is not related to the acquisition patient, a warning is displayed in the review window reminding you that you are not reviewing the acquisition patient. You can dim this warning, but while you are reviewing a series or study that is not from the acquisition patient, it is always displayed.

7.2 Reviewing a Series using the Review Window

You can review a series for any patient in the review window using the mouse or review module in the control room, or the viewpad or optional mouse in the examination room.

The following procedure describes a single method but you can also perform many of the actions using either the mouse, the review module, or the viewpad depending upon the situation. For more information, see *Review Module* (page 417) and *Viewpad* (page 419).



1 Click the **Series** task in the review window to select a series for review.

2 To change the way series are listed in the control panel, do one of the following:



- Click **Show pictorials** to display the series as pictorials.



- Click **Show details** to display the series as a list.

3 Do one of the following:
- Click a series to open it in the main display area.
- Double-click a series to open it in the main display area and automatically replay the images in the series.

NOTE ***Biplane series are always displayed with the frontal series and lateral series side by side in the Series task. When you select a biplane series, the corresponding series on the other channel is also selected.***

4 To control the replay of the images in a series, do the following:



a To replay the series, click **Play**.



b To pause the series, click **Pause**

c To review the previous or next image in the series, click **Previous image** or **Next image**.



d To review the previous or next series, click **Previous series** or **Next series**.

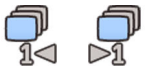



e To change the frame rate used when replaying the images, click **Frame Rate** and adjust the slider to the desired number of images per second.

NOTE ***When reviewing biplane images, only one movie toolbar is displayed. Movie playback and displayed images are synchronized for the frontal and lateral images.***



5 To replay all images and series in the study, click **Cycle All**.



6 To display an overview of all images in the selected series, click **Image Overview**.



7 To display one image from each of the available series for the patient, click **Series Overview**.

8 To review a particular type of image, select one of the following filters from the list:
- **Acquired images**
- **Photo images**
- **Flagged images**

7.3 Reviewing a Series using the Touch Screen Module

You can review a series for the acquisition patient using the touch screen module.

The following procedure describes a single method but you can also perform many of the actions using either the mouse, the review module, or the viewpad depending upon the situation. For more information, see *Review Module* (page 417) and *Viewpad* (page 419).

When you review a biplane series on the touch screen module, instead of the frontal image and lateral image displayed side by side as in the review window, the frontal image is displayed in the main viewport, and the lateral image is displayed in a mini viewport within the main viewport.

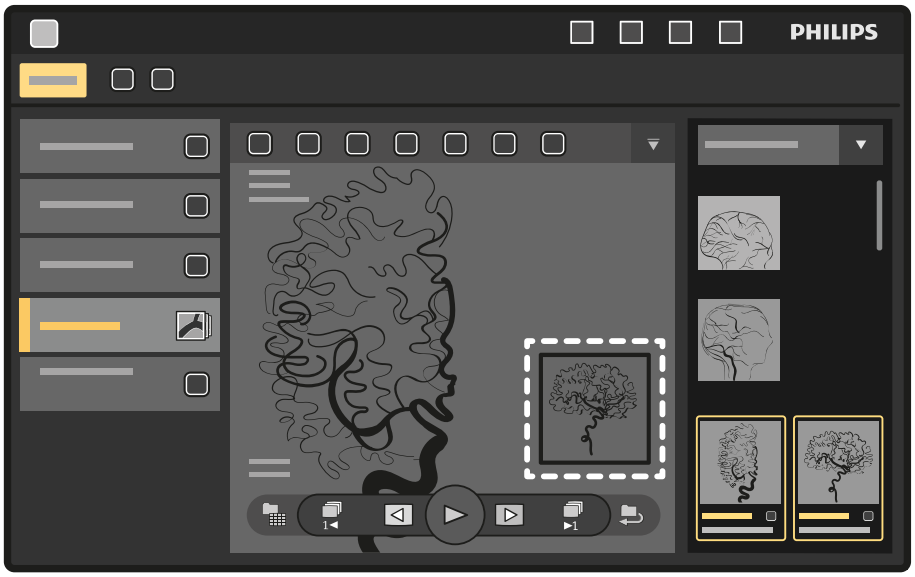

Figure 66 Mini viewport in the main viewport

To swap the image in the main viewport with the image in the mini viewport, tap the mini viewport.

To reposition the mini viewport, touch the mini viewport and drag it to a new location.

1  Select the **X-ray Acquisition** application on the touch screen module.



2 Select the **Series** task.

3 Tap a series in the task panel to open it in the main display area.

NOTE ***Biplane series are always displayed with the frontal series and lateral series side by side in the Series task. When you select a biplane series, the corresponding series on the other channel is also selected.***

4 To replay the images in a series, do the following:



a To replay the series, tap **Play**.



b To pause the series, tap **Pause**

c To review the previous or next image in the series, tap **Previous image** or **Next image**.



d To review the previous or next series, tap **Previous series** or **Next series**.

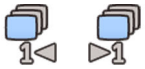



5 To replay all images and series in the study, tap **Cycle All**.



6 To display an overview of all images in the selected series, tap **Image Overview**.



7 To display one image from each of the available series for the patient, tap **Series Overview**.

8 To review a particular type of image, select one of the following filters from the list:
- **Acquired images**
- **Photo images**
- **Flagged images**

7.4 Using the Interventional Room Pointer

You can display the interventional room pointer on an image in a viewport to indicate a region of interest. The pointer is visible in any window (in the examination room and the control room) and on any touch screen module that also displays the image.

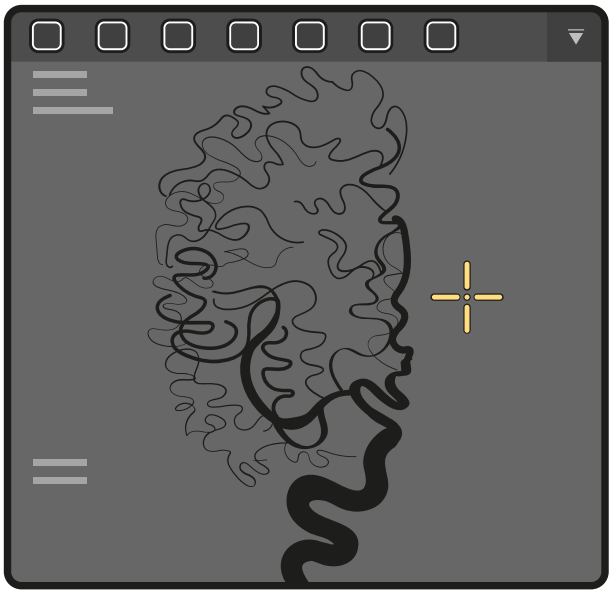

Figure 67 Interventional room pointer



1 To display the pointer using the mouse, click **Interventional Room Pointer** on the toolbar of the viewport.

Move the mouse to move the pointer on the image.

a To remove the pointer from the image, click **Interventional Room Pointer** on the toolbar again.

2 To display the pointer using the touch screen module, tap and hold on the image in the viewport.

Drag your finger to move the pointer on the image. The pointer is removed when lift your finger off the touch screen module.

7.5 Protecting and Unprotecting Studies

If the system's storage is full, the system automatically deletes data that is not protected to make space for newly acquired images. You can protect individual studies to prevent deletion.



1 Click the patient selector in the upper-left corner of the acquisition window or the review window.

2 Select a study in the list.



3 To protect the study, right-click the study and click **Protect Study**.



4 To unprotect a study which is already protected, right-click the study and click **Unprotect Study**.

You can configure the system to protect every study upon completion. For more information, see *Changing General Patient and Workflow Settings* (page 235).

7.6 Reviewing Historical Data for a Scheduled Patient

You can review historical studies and series for a scheduled patient.

When you have selected a patient in the patient list, you can view all the studies that are available for that patient. This includes studies and series available on the local database and archived studies and series available on the network.



1 Click the patient selector in the upper-left corner of the review window to display the patient database.

2 Select a scheduled patient in the patient list.

3 Click the **History** tab.

All available studies and series for the selected patient are displayed, including archived studies and series that are available on the network. If a series is available in the local patient database, a pictorial is displayed. If a series is an archived series, a pictorial image is not displayed.

Studies are displayed in acquisition date order by default, with the most recent first.

4 To view a study in the local patient database, do the following:

a Find the study in the list.

b Select the series that you want to view within the study.

c Click **View**.

5 To view an archived study, do the following:

a Find the study in the list.

b Select the series that you want to review within the study.

To import more than one archived series at a time, select the check box in the top left corner of each series that you want to import.



c Click **Import**.

The selected series are imported from the network archive to the local database.

d Select the imported series that you want to view.

e Click **View**.

7.7 Importing Studies or Series for Review

You can import studies or series from a network location, a CD or DVD, or a USB device for review on the system.

7.7.1 Importing Studies or Series from a Network Location



1 Open the patient database.



2 Click the network location that you want to import from.

A search panel is displayed, allowing you to find the patient and study you are looking for.

3 Enter some appropriate search terms and click **Search**.

A patient list is displayed showing studies matching your search criteria.

4 Select the desired patient study in the list.

The study details are displayed below the patient list.



5 To import the whole study, click **Import**.

6 To import a series from the study, click the **Series** tab.

The available series are displayed. No previews are shown in the pictorials as the series are not in the local patient database.

7 Select the series you want to import.



8 Click **Import**.

When the import process is complete, a preview image is displayed in the pictorial.

9 If you want to cancel the import process, click **Stop**.

7.7.2 Importing Studies and Series from USB Device, CD, or DVD

1 If you are importing from a USB device, insert the device into one of the USB ports on the monitor in the control room.

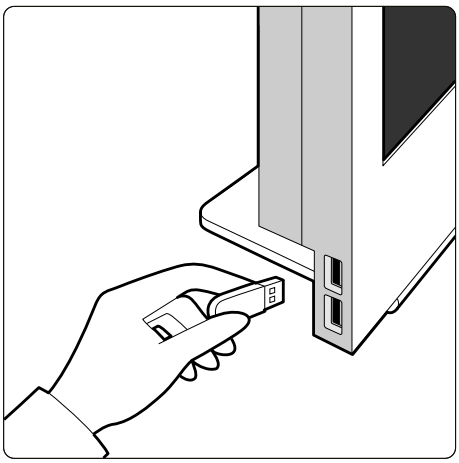

Figure 68 Inserting a USB flash memory drive

2 If you are importing from a CD or DVD, insert the disc into the CD/DVD drive.



3 Open the patient database.

4 Click the device that you want to import from.



If the device is password-protected, enter the password in the dialog box displayed and click **Unlock**.

A patient list is displayed showing the available studies from the selected device.

5 Select the desired patient study in the list.

The study details are displayed below the patient list.



6 To import the whole study, click **Import**.

A dialog box is displayed requesting you to confirm your action.

7 Confirm your import by doing the following:
- Click **Link** to import the data and merge patient details. Use this option if the data that you are importing belongs to a patient who already has studies on the system.
- Click **Import** to import the data without merging patient details.
- Click **Cancel** to cancel the import.

If you click **Link**, a further dialog box is displayed. Check that the patient details are correct and then click **Link Data** to import the data and merge the patient details. Alternatively, click **Cancel** to close the dialog box without importing the data.

8 To import a series from the study, click the **Series** tab.

The available series are displayed. No previews are shown in the pictorials as the series are not stored in the local patient database.



9 Select the series that you want to import and click **Import**.

NOTE ***Do not remove the USB device, the CD, or the DVD until the import process is complete (the progress of the import process is displayed).***

When the import process is complete, a preview image is displayed in the pictorial.

10 If you want to cancel the import process, click **Stop**.

7.8 Bolus Chase Reconstruction

Bolus Chase Reconstruction is a software tool that is available as an option on the system. It creates an overview image of the arteries in the patient's legs by automatically stitching together successive images acquired with the Flexible Dynamic Peripheral Angiography (FDPA) acquisition protocol or Bolus Chase acquisition protocol.

The overview image is intended to assist you in viewing the original images. The overview image is not intended to be used for diagnosis. Actual diagnosis (for example, analysis of occlusions) should be based on information contained in the original X-ray images.

For information about acquiring X-ray images, see *Bolus Chase* (page 100).

NOTE ***Imported images cannot be used to create an overview image in Bolus Chase Reconstruction.***

The Bolus Chase Reconstruction screen provides the following views and task panels.

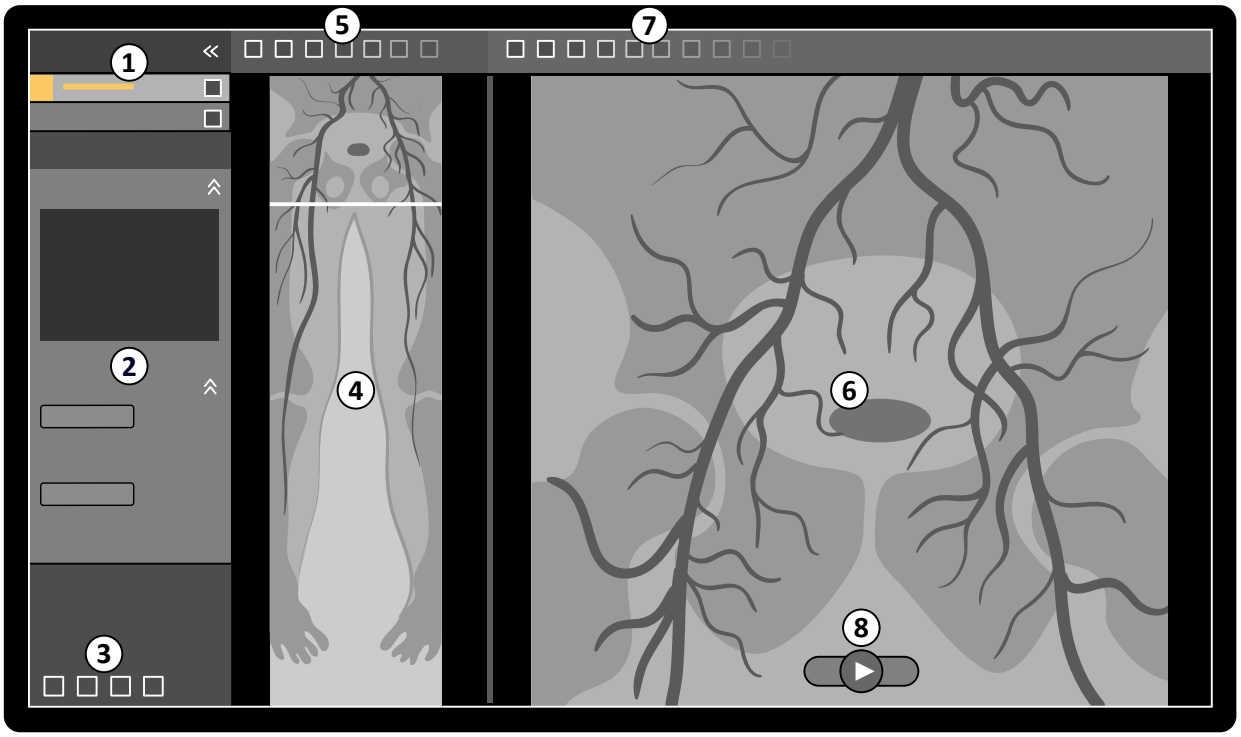

Figure 69 Bolus Chase Reconstruction

Legend			
1	Task selection panel	5	Overview image toolbar
2	Task panel	6	Main view (displaying original or subtracted images)
3	Global tools	7	Main view toolbar
4	Overview image	8	Navigation toolbar

7.8.1 Tasks

Bolus Chase Reconstruction provides the following tasks:



Reconstruction: This task allows you to view the reconstructed overview image. You use the overview image to assist you with navigation and analysis of the original images.



Processing: This task provides tools for adding annotations and creating measurements in the original images.

You use the task selection panel to move to the next task when the current task is complete. You can also move back to a previous task and repeat it, if desired. The task panel provides functions associated with the current task.

7.8.2 Reconstruction

After you acquire a bolus chase run, Bolus Chase Reconstruction starts automatically and reconstructs an overview image.

If a patient other than the acquisition patient is being reviewed in the review window, that patient is automatically closed and the bolus chase run for the acquisition patient is opened.

When a bolus chase mask run is also available for the acquisition patient, you can create a subtracted view of the reconstruction image.

NOTE ***You can start Bolus Chase Reconstruction manually in the control room for a patient other than the acquisition patient by opening a previously acquired bolus chase run in the patient database. To start the application, click More Tools and then click Bolus Chase Reconstruction.***

NOTE ***Reconstructions are saved automatically.***

Reviewing the Reconstruction

After automatic reconstruction of the bolus chase run, an overview image is displayed alongside the original acquisition images.

NOTE ***The reconstructed image is only for overview and navigation. It is not intended for diagnostic purposes. Clinical conclusions should be based on and verified using the original images.***



The **Reconstruction** task is opened, providing a control panel containing tools for managing reconstructions.

1 Review the overview image and the original images to verify whether the complete peripheral artery is visible, or if any occlusions are present.

Use the overview image as a reference when navigating through the original images.

2 To view the original image corresponding to a particular point in the overview image, click the point in the overview image.

A line is displayed in the overview image as a marker, and the corresponding original image is displayed in the main view. You can drag the marker line to adjust its position.

3 To view the original images in the series or to review the series as a movie, use the navigation toolbar at the bottom of the main view.

The navigation toolbar provides the following controls:

Control	Function	
	**Play**	Plays the original images as a movie
	**Stop**	Stops movie playback
	**Next image**	Displays original images sequentially forward through the run
	**Previous image**	Displays original images sequentially backward through the run

You can also control image navigation using the following actions:
- Double-click in the main view to start and stop movie playback.
- With movie playback stopped, rotate the wheel button down to view the next image, or rotate the wheel button up to view the previous image.

The following functions are not available when reviewing the series as a movie:
- Annotations
- Measurements
- Snapshots
- Printing

4 To view original images in the main view with the anatomy fixed in place, do the following:

- Display the desired location in the overview image.
- Select **Fixed Anatomy** in the **Reconstruction** control panel.

When the anatomy is fixed and you click **Next image** or **Previous image** in the navigation toolbar, sequential images are displayed higher or lower in the main view so that the anatomy in each image is displayed in the same position in the view. Fixing the anatomy assists you with reviewing a region of interest in a series of the original images.

NOTE ***When Fixed Anatomy is enabled, the movie review function cannot be used.***



5 To zoom the original images in the main view, click **Zoom** on the main view toolbar and do the following:

- To zoom in, drag upward.
- To zoom out, drag downward.

You can also zoom the view directly by pressing Ctrl and rotating the wheel button, even when the Zoom tool is not selected.

NOTE ***The overview image cannot be zoomed.***



6 To pan the original images in the main view, click **Pan** on the main view toolbar and drag the image to pan the view.

You can also pan the view directly by dragging with the right mouse button, even when the pan tool is not selected. The overview image cannot be panned.



7 To adjust the brightness and contrast of the overview image or the original images, click **Brightness / Contrast** on the corresponding toolbar and do the following:

- Drag the pointer upward to decrease the brightness level.
- Drag the pointer downward to increase the brightness level.
- Drag the pointer to the right to decrease the contrast level.
- Drag the pointer to the left to increase the contrast level.

You can also adjust the brightness and contrast directly by pressing Ctrl and dragging with the middle mouse button, even when the brightness/contrast tool is not selected.



8 To invert the gray values of the overview image or the original images, click **Invert** on the corresponding toolbar.



9 To create a snapshot of the overview image or of the original image displayed in the main view, click **Snapshot** on the corresponding toolbar.



Before creating a snapshot, ensure that the appropriate level of patient information is displayed in the image using the **Image overlays** tool in the global tools panel.

The snapshot is saved in the patient database under the current study.



10 To send the overview image or the currently displayed original image to a reference view in the examination room, click **Copy to Reference** on the corresponding toolbar.

Depending on the configuration of your X-ray system, you can choose to send the image to reference view 1, reference view 2, or reference view 3.



11 To reset the overview image or the original images to their default presentation state, click **Reset** in the corresponding toolbar.

12 To hide the overview image and display only the original images, select **Hide Reconstruction** in the **Reconstruction** control panel.

13 If another bolus chase reconstruction is available for the patient, you can select the reconstruction in the **Existing Reconstructions** panel of the **Reconstruction** control panel.

The bolus chase reconstruction that is currently selected for investigation is indicated with an icon in the **Existing Reconstructions** panel.

14 If the currently displayed bolus chase run is not suitable, you can acquire another bolus chase run for the patient. To view the newly acquired run, click **Select Series** in the **Reconstruction** control panel.

If you acquired a new contrast run and a new mask run, you can select both runs in the **Select Series** dialog box.

15 To delete a reconstruction, right-click the reconstruction in the **Existing Reconstructions** panel and click **Delete** in the shortcut menu.

Using a Mask

If a mask acquisition run (without contrast) is available, you can apply the mask and create a subtracted image.

1 Acquire a mask run.

The mask run is automatically processed and applied to the current contrast run and a subtracted overview image is displayed. The subtracted original images are displayed in the main view.

The subtracted reconstruction is also selected in the **Existing Reconstructions** panel in the task panel.

2 Review the subtracted run.



3 To manually combine part of the subtracted background with the subtracted overview image or the subtracted original images, click **Landmarking** on the corresponding toolbar and do the following:

- Drag the pointer upward to decrease the visibility of landmarks (increase transparency).
- Drag the pointer downward to increase the visibility of landmarks (decrease transparency).

Landmarking is useful for orientation purposes.



4 To turn subtraction off in the main view and view the original unsubtracted images, click **Subtraction On / Off** in the toolbar.

5 To turn subtraction back on, click **Subtraction On / Off** again.

6 If desired, you can acquire a new mask run.

The new mask run is automatically processed and applied to the current contrast run and a subtracted overview image is displayed. The subtracted original images are displayed in the main view.

7 To use a different mask run that you have already acquired, click **Remask** in the **Reconstruction** task panel.

The **Remask** dialog box is displayed, showing available mask runs.

8 Select a mask run in **Remask** dialog box and click **OK**.

Subtraction is automatically applied using the new mask run.

7.8.3 Processing

While reviewing images, you can add annotations and measurements.

You can add annotations and measurements to the original images, but you can only add annotations to the overview image.

For more information, see the following sections:
- *Adding Annotations* (page 135)
- *Creating Measurements* (page 143)

7.9 Resolving a Patient Mix

If you believe images have been stored for the wrong patient, you can move them to the correct patient using the **Resolve Patient Mix** wizard.

NOTE ***If the patient to whom you want to move the series (the destination patient) is not in the patient list, you must add them before using the wizard. For more information, see Scheduling a Study Manually (page 52).***

1 To start the wizard, do the following:



   a Click the patient selector in the upper-left corner of the acquisition window.

   b Select the patient whose folder contains the series you want to move.

   c Right-click on the patient and click **Resolve Patient Mix** in the shortcut menu.

2 Verify that the source patient is correct, and click **Next**.

3 Select the series to move to the destination patient.

   You can select more than one series at a time if you believe more than one series needs to be moved. To select more than one series, select the check box in the top left corner of each series to be moved.

4 Click **Next**.

5 Select the destination study by doing the following:

   a Select the destination patient in the list.

   A list of available destination studies for the selected patient is displayed.

   b Select the destination study in the list.

6 Click **Next**.

7 Verify that the series to be moved and the destination patient are correct.

8 If they are correct, click **Finish**.

   NOTE ***After you move the series, dose information is applied as follows:***
   - ***The dose information for the whole source study is added to the destination patient. As a result, the displayed dose information for the destination patient may be higher than the actual dose that the patient has received.***
   - ***The dose information is not removed from the source patient.***

9 Click **Close** to close the wizard.

8 Processing

After acquiring images or opening a series, you can perform image processing functions.



In the **Processing** task, you can perform the following image processing functions:

- Zoom and pan images
- Adjust contrast, brightness and edge enhancements
- Apply text and graphical annotations
- Crop images (electronic shutters)
- Apply vascular tools
- Create view trace images
- Perform measurements
- Start quantitative analysis

When performing processing actions, you select the appropriate task in the task selection panel and the images are displayed in the main display area. For more information, see the following sections:

- *Windows, Panels, Views, and Viewports* (page 424)
- *Acquisition Monitor* (page 389)
- *Review Monitor* (page 391)
- *Toolbars* (page 410)

Processing Biplane Images

When processing biplane images, you can set the scope of your modifications to just the frontal or lateral image, independently to either image, or automatically to both images.



To set the processing scope, click **Link Image Processing** in the toolbar.

- **Biplane Unlinked**: Changes can be applied independently to both the frontal and lateral images
- **Biplane Linked**: Changes applied to one image are automatically applied to both the frontal and lateral images

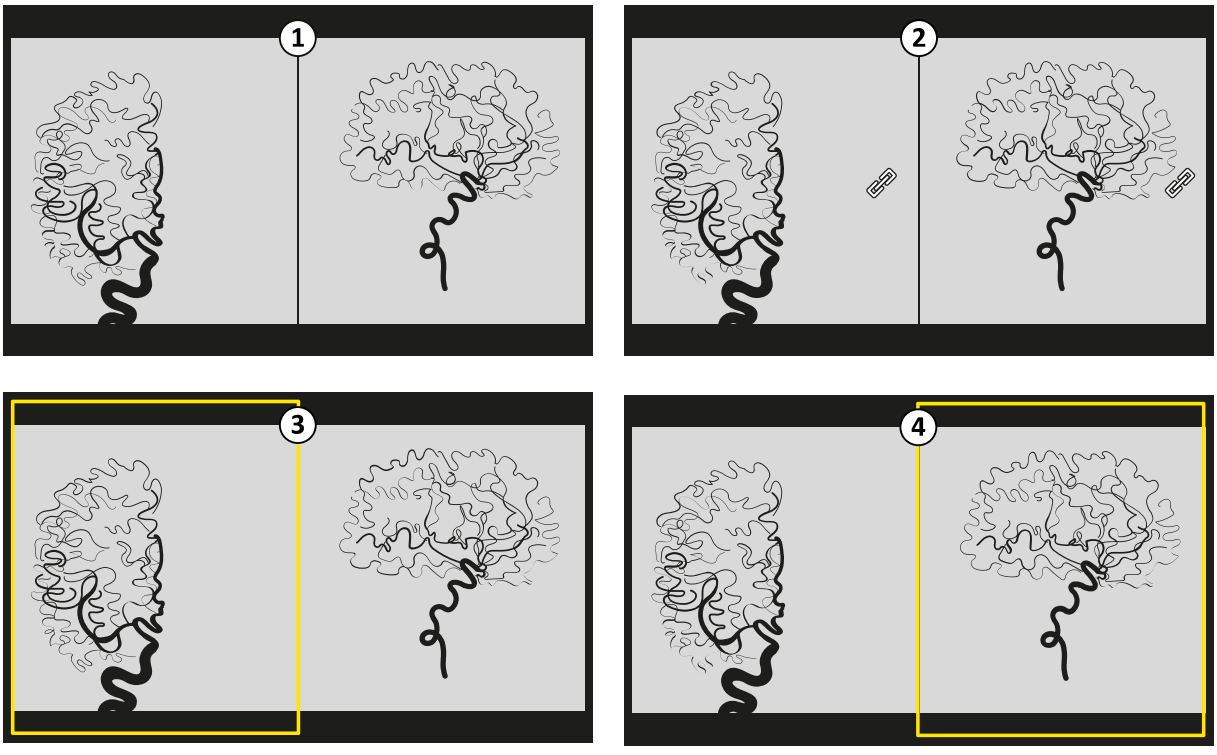

Figure 70 Link Image Processing options

Legend			
1	**Biplane Unlinked** image processing	3	**Biplane Unlinked** with focus on the frontal image
2	**Biplane Linked** image processing	4	**Biplane Unlinked** with focus on the lateral image

8.1 Zooming

You can zoom images using the mouse or the touch screen module. When using the mouse, you can zoom images in the acquisition window and the review window. When using the touch screen module, you can zoom images in the acquisition window.

1 Select the **Processing** task, and then click or tap **Zoom and Pan**.

NOTE ***Zoom is also available on the toolbar in the acquisition window or review window.***

2 To zoom using the mouse, do the following:
- To zoom in, drag upward.
- To zoom out, drag downward.

a To zoom the current image only, select **Adjust current image only** in the control panel.

3 To zoom using the touch screen module, use the **Zoom** controls.

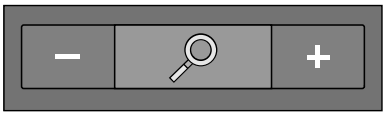

NOTE ***You can also zoom with touch gestures on the touch screen module. For more information, see Touch Screen Gestures (page 398).***

a To select whether your changes apply to the current image only or to all images, tap **Scope** and select an option.

– Apply changes to the current image only.
– Apply changes to all images in the series.

4 To display the complete image in the center of the view again, click or tap **Reset** in the control panel.

8.2 Panning

You can pan images using the mouse or the touch screen module. When using the mouse, you can pan images in the acquisition window and the review window. When using the touch screen module, you can pan images in the acquisition window. Panning allows you to view different areas of a zoomed image.

1 Select the **Processing** task, and then click or tap **Zoom and Pan**.

NOTE ***Pan is also available on the toolbar in the acquisition window or review window.***

2 To pan using the mouse, drag the image in the desired direction.

a To pan the current image only, select **Adjust current image only** in the control panel.

3 To pan using the touch screen module, use the **Pan** controls.

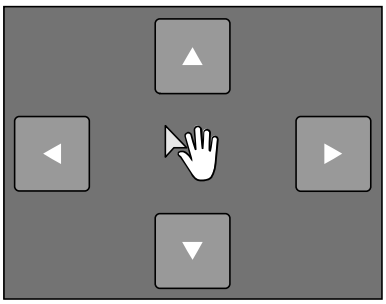

NOTE ***You can also pan by dragging directly on the touch screen module. For more information, see Touch Screen Gestures (page 398).***

a To select whether your changes apply to the current image only or to all images, tap **Scope** and select an option.

- Apply changes to the current image only.
- Apply changes to all images in the series.

4 To display the complete image in the center of the view again, click **Reset** in the control panel.

8.3 Adjusting Contrast and Brightness

To assist you when reviewing images, you can adjust the contrast and brightness levels independently.

1 To adjust contrast and brightness using the mouse directly on the image, click **Contrast and brightness** on the toolbar in the acquisition window or review window, and do the following:

- Drag upward to decrease the brightness level.
- Drag downward to increase the brightness level.
- Drag to the right to decrease the contrast level.
- Drag to the left to increase the contrast level.

2 To adjust contrast and brightness in the task panel, do the following:

a Select the **Processing** task and click **Contrast, Brightness, Edge**.

b Adjust the **Contrast and brightness** sliders.

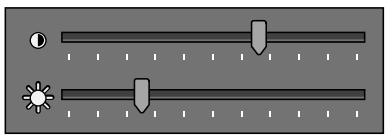

c To apply the changes to the current image only, select **Adjust current image only**.

3 To adjust contrast and brightness on the touch screen module, do the following:

a Select the **Processing** task and tap **CBE**.

b Use the **Contrast and brightness** controls.

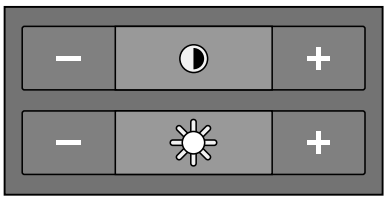

c To select whether your changes apply to the current image only or to all images, tap **Scope** and select an option.

- Apply changes to the current image only.
- Apply changes to all images in the series.

4 To reset your changes, click or tap **Reset** in the task panel.

You can also reset your changes by clicking **Reset image processing** on the toolbar in the acquisition window or review window.

8.4 Enhancing Edges in Images

To assist you when reviewing images, you can use the edge enhancement function to sharpen edges and make them clearer.

1 To enhance edges using the mouse directly on the image, click **Edge enhancements** on the toolbar in the acquisition window or review window, and do the following:

- Drag upward to make edges sharper.
- Drag downward to make edges softer.

2 To adjust edge enhancement in the task panel, do the following:

a Select the **Processing** task and click **Contrast, Brightness, Edge**.

b Adjust the **Edge enhancements** slider.



c To apply the changes to the current image only, select **Adjust current image only**.

3 To adjust edge enhancement on the touch screen module, do the following:

a Select the **Processing** task and tap **CBE**.

b Use the **Edge enhancements** controls.

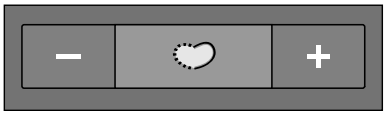

c To select whether your changes apply to the current image only or to all images, tap **Scope** and select an option.

- Apply changes to the current image only.
- Apply changes to all images in the series.

4 To reset your changes, click or tap **Reset** in the task panel.

You can also reset your changes by clicking **Reset image processing** on the toolbar in the acquisition window or review window.

8.5 Inverting Images

You can invert images when reviewing and processing.



1 Select the **Processing** task, and then click or tap **Contrast, Brightness, Edge** (**CBE**).



2 Click or tap **Invert**.

3 To switch the invert function off, click or tap **Invert** again.

8.6 Adding Annotations

You can add annotations to images using the **Processing** task.

The following types of annotations are available:

- Text annotation, using predefined labels or your own text
- Arrow
- Ellipse
- Rectangle
- Polyline

NOTE ***You can copy and paste annotations using the standard PC keyboard shortcuts: Ctrl+C and Ctrl+V.***

Annotations are saved with the images, and they are available if you open the images in another application on your system.

8.6.1 Adding a Text Annotation

You can add a text annotation using your own text or predefined text.



1 Click the **Processing** task, and then click **Annotations** to display the available options.

2 To apply an annotation to all images in the series, instead of just the selected image, select **Annotate All Images** in the task panel before creating the annotation.



3 Click **Free Format Text** in the task panel, and then click in the image at the location where you want to add the annotation.

The **Free Format Text** function is also available in the toolbar and in the shortcut menu when you right-click a location in the image.

4 Do one of the following:

- Type your own text in the annotation, and then press Enter or click outside the annotation.
- Click the arrow at the end of the annotation and select a predefined annotation. For more information, see *Customizing Predefined Annotations* (page 230).

NOTE ***To edit an annotation after creating it, click the annotation, and then edit the text.***

5 To change the appearance of an annotation, right-click it and select an option from the shortcut menu.

You can change the following characteristics, when available:

- **Color**
- **Font Size**
- **Line Thickness**

6 To move an annotation, drag it to a new location.



7 To delete an annotation, select the annotation, and then click **Delete** in the task panel.

You can also delete an annotation (or just an annotation's text label, if applicable) from the shortcut menu after right-clicking the annotation.

8.6.2 Adding an Arrow

You can add an arrow annotation with a text label.



1 Click the **Processing** task, and then click **Annotations** to display the available options.

2 To apply an annotation to all images in the series, instead of just the selected image, select **Annotate All Images** in the task panel before creating the annotation.



3 Click **Arrow + Text** in the task panel.

4 Click in the image at the location where you want to place the point of the arrow, and then click again at the end of the arrow.

5 Do one of the following:
- Type your own text in the label, and then press Enter or click outside the label.
- Click the arrow at the end of the label and select a predefined annotation.
- To create the annotation without a text label, press Enter or click outside the label without entering any text.

NOTE ***To edit a text label after creating an annotation, click the label, and then edit the text.***

6 To change the appearance of an annotation, right-click it and select an option from the shortcut menu.

You can change the following characteristics, when available:
- **Color**
- **Font Size**
- **Line Thickness**

7 To move an arrow or its text label, drag it to a new location.

8 To edit an arrow, drag an end point to a new location.



9 To delete an annotation, select the annotation, and then click **Delete** in the task panel.

You can also delete an annotation (or just an annotation's text label, if applicable) from the shortcut menu after right-clicking the annotation.

8.6.3 Adding an Ellipse



1 Click the **Processing** task, and then click **Annotations** to display the available options.



2 Click **Ellipse** in the task panel, and then do the following (creating an ellipse requires three mouse clicks):

- In the image, click to start drawing the ellipse.
- Move the pointer and click to set the length (long axis) of the ellipse.
- Click again to set the width (short axis) of the ellipse.

3 To change the appearance of an annotation, right-click it and select an option from the shortcut menu.

You can change the following characteristics, when available:
- **Color**
- **Font Size**
- **Line Thickness**

4 To move an ellipse, drag it to a new location.

NOTE ***Before dragging an ellipse, move the pointer over the border of the ellipse.***

5 To edit an ellipse, move the pointer over the ellipse, and then drag a control point to change the shape of the ellipse.



6 To delete an annotation, select the annotation, and then click **Delete** in the task panel.

You can also delete an annotation (or just an annotation's text label, if applicable) from the shortcut menu after right-clicking the annotation.

8.6.4 Adding a Rectangle



1 Click the **Processing** task, and then click **Annotations** to display the available options.



2 Click **Rectangle** in the task panel.

3 In the image, drag diagonally across the location where you want to place the rectangle.

4 To change the appearance of an annotation, right-click it and select an option from the shortcut menu.

You can change the following characteristics, when available:
- **Color**
- **Font Size**
- **Line Thickness**

5 To move a rectangle, drag it to a new location.

NOTE ***Before dragging a rectangle, move the pointer over the border of the rectangle.***

6 To edit a rectangle, move the pointer over the rectangle, and then drag a control point to change the shape of the rectangle.



7 To delete an annotation, select the annotation, and then click **Delete** in the task panel.

You can also delete an annotation (or just an annotation's text label, if applicable) from the shortcut menu after right-clicking the annotation.

8.6.5 Adding a Polyline



1 Click the **Processing** task, and then click **Annotations** to display the available options.



2 Click **Polyline** in the task panel.

3 In the image, click at the start point of the line.

4 Click at intermediate points in the line.

You can set as many intermediate points as you want.

5 Double-click at the end point of the line.

6 To change the appearance of an annotation, right-click it and select an option from the shortcut menu.

You can change the following characteristics, when available:
- **Color**
- **Font Size**
- **Line Thickness**

7 To move a polyline, drag it to a new location.

8 To edit a polyline, do any of the following:
- Drag an end point or an intermediate point to a new location.
- To create a new point, click on the line between points and then drag the new point to a new location.
- To delete a point, right-click the point and then click **Delete Point**.

9 To apply an annotation to all images in the series, instead of just the selected image, select **Annotate All Images** in the task panel before creating the annotation.



10 To delete an annotation, select the annotation, and then click **Delete** in the task panel.

You can also delete an annotation (or just an annotation's text label, if applicable) from the shortcut menu after right-clicking the annotation.

8.7 Cropping Images

Cropping an image allows you to hide parts of the viewed image that are not of interest. This does not affect the stored image. Crop lines are also known as electronic shutters.



1 Click the **Processing** task in the acquisition or review windows.



2 Click **Image Cropping** in the control panel.

Shutter lines are displayed at the edges of the image.

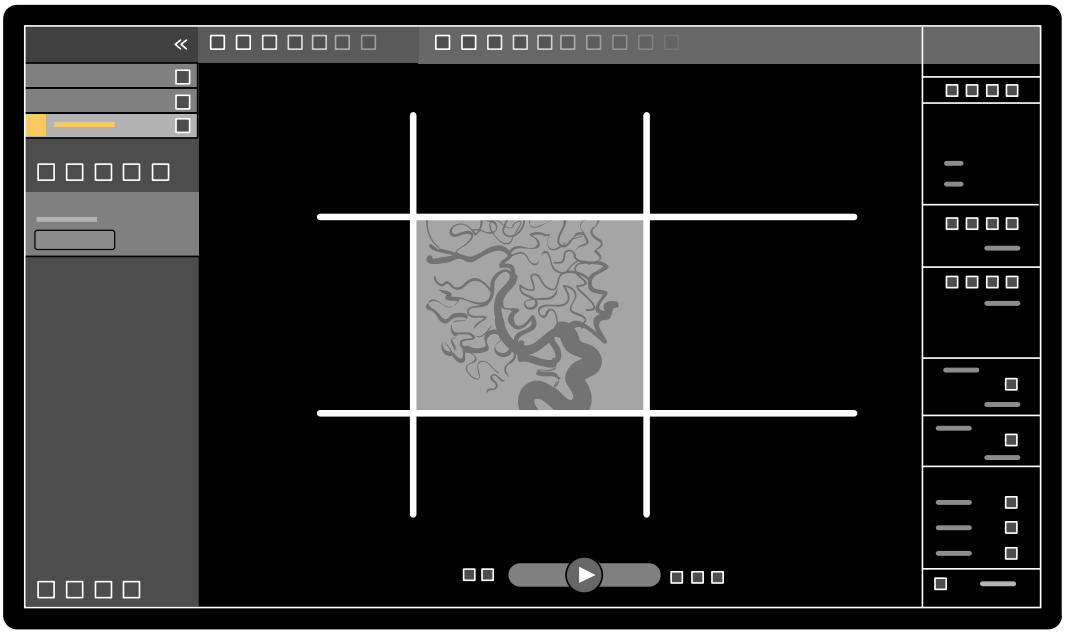

Figure 71 Shutter lines when cropping an image

3 To move the left and right, and top and bottom lines together, select the **Use symmetric lines** check box.

For example, moving the left shutter line to the right when using symmetric lines, will also cause the right shutter line to move to the left.

4 To set each line to move independently, clear the **Use symmetric lines** check box.

5 To move a line, drag it to the desired position.

NOTE ***The shutter lines disappear in the acquisition window when acquisition starts or when a new task is selected in the control panel. To move the shutter lines after they have disappeared, you must first reselect Image Cropping in the control panel.***



6 To reset all image processing changes, click **Reset** in the control panel, or click **Reset image processing** on the toolbar.

8.8 Using Subtraction

Subtraction can assist with orientation in the anatomy when reviewing series, and can help you visualize blood vessels in soft tissue by removing details that do not relate to the contrast-filled vessels.

Subtraction uses a mask image. You can select the mask from the same series, or subtract one series from another series.

1 Open the series that you want to perform postprocessing on.



2 Select the **Processing** task.



3 Select **Vascular Tools**.

4 To start subtraction, do one of the following:



a To use a single mask image, select **Image Subtraction**.

This function subtracts all images in a series from one single mask image.

NOTE ***You can also select Image Subtraction using the toolbar.***



b To subtract one series from another series, select **Series Subtraction**

This function subtracts all images in a series from the corresponding images (images with the same image number) in another series from the same study.

8.8.1 Changing the Subtraction Mask

You can change the mask used for subtraction by selecting another image from the current series or by selecting another series within the same study. This is also known as remasking.

Ensure that subtraction is switched on. For more information, see *Using Subtraction* (page 139).



1 Select the **Processing** task.



2 Select **Vascular Tools**.



3 If you are using the touch screen module, tap **Remask**.

4 If you are using **Image Subtraction**, use one of the following functions to select a new mask image:

-  Sets the current image as the new mask image. Before using this function, navigate to the desired mask image. This function is also available in the toolbar.
-  Sets the last image in the current series as the new mask image.
-  Sets the image before the current mask image as the new mask image.
-  Sets the image after the current mask image as the new mask image.

5 If you are using **Series Subtraction**, do one of the following to select a new mask series:

-  Sets the series before the current mask series as the new mask series.
-  Sets the series after the current mask series as the new mask series.



6 To reset the mask to the default mask used during acquisition, select **Reset**.

8.8.2 Adjusting the Mask Position

If the mask image and the live image are not aligned, for example, due to patient movement, you can adjust the position of the mask image.

Ensure that subtraction is switched on. For more information, see *Using Subtraction* (page 139).



1 Select the **Processing** task, and then select **Vascular Tools**.



2 Select **Pixel Shift**.

NOTE ***You can also select Pixel Shift using the toolbar.***

3 Select the **Scope** to determine what images to apply the repositioning to.

-  Apply changes to all images in the series.
-  Apply changes to the current image only.
-  Apply changes to the current image and preceding images.
-  Apply changes to the current image and all following images.

4 To adjust the position of the mask image using the mouse, drag the mask image to the new position.

5 To adjust the position of the mask image using the touch screen module, tap the arrow corresponding to the desired direction.



6 To reset the mask image position, click or tap **Reset**.

8.9 Using Landmarking

Landmarking allows you to fade in background anatomy when reviewing images.

You can only apply **Landmarking** if subtraction is switched on.



1 To adjust landmarking using the mouse directly on the image, right-click the image, click **Landmarking**, and then do one of the following:

- To increase transparency, drag upward.
- To decrease transparency, drag downward.

2 To adjust landmarking in the control panel, do the following:



a Select the **Processing** task and click **Vascular Tools**.

b click **On** in the **Landmarking** control panel

c Adjust the **Landmarking** slider.



d To apply the changes to the current image only, select **Adjust current image only**.

NOTE ***You can also select Landmarking using the toolbar.***

3 To adjust landmarking on the touch screen module, do the following:



a Select the **Processing** task, tap **Vascular Tools**, and then tap **Landmarking**.

b Use the **Landmarking** controls.

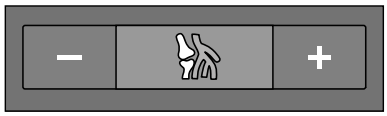

c To select whether your changes apply to the current image only or to all images, tap **Scope** and select an option.

-  Apply changes to the current image only.
-  Apply changes to all images in the series.



4 To turn landmarking on or off, click **Landmarking** in the toolbar.



5 To reset your changes, click or tap **Reset** in the task panel.

You can also reset your changes by clicking **Reset image processing** on the toolbar in the acquisition window or review window.

8.10 Creating a View Trace Image

View Trace creates a single image showing the whole vessel tree filled with contrast. The system creates this image by adding together images that you select from the series.

To use **View Trace**, the series that you are reviewing must contain images with contrast medium.

NOTE ***While creating a view trace image, other processing tools are unavailable.***

1 Navigate to the image that you want to use as the starting point.



2 Click the **Processing** task in the acquisition or review window.



3 Click **View Trace**.

The **View Trace** control panel opens and the view trace image is displayed.

4 Select the contrast medium in use.

- **Iodine**
- **CO2**



5 To add the current image to the view trace image, click **Add**.

The image is added to the view trace image and the next image is displayed. The following symbol is displayed:





6 To move to the next image without adding the current image to the view trace image, click **Skip**.



7 To remove the last image added from view trace image, click **Undo Last**.



8 To save the view trace image, click **Save**.



9 To cancel the creation of the view trace image, click **Exit**.

The **View Trace** control panel closes.

NOTE ***An unsaved view trace image is not saved automatically.***

8.11 Copying Images and Series to Reference Windows

You can copy an image or series to a reference window. Depending on your system configuration, either two or three reference windows are available.

In the control room, reference windows that are in use are displayed as tabs in the header area. In the examination room, separate reference windows or viewports are used.

1 To copy an image, navigate to the desired image, do one of the following:



- Click **Copy image to Reference 1**. On a biplane system, the image with focus is copied. If neither image has focus, the frontal image is copied.



- Click **Copy image to Reference 2**. On a biplane system, the image with focus is copied. If neither image has focus, the lateral image is copied.



- Click **Copy image to Reference 3**. On a biplane system, the image with focus is copied. If neither image has focus, both images are copied.



2 To copy the series, right-click on the current image, select **Copy to Reference** in the shortcut menu, and do one of the following:



- Click **Copy series to Reference 1**. On a biplane system, the series from the frontal channel is copied.



- Click **Copy series to Reference 2**. On a biplane system, the series from the lateral channel is copied.



- Click **Copy series to Reference 3**. On a biplane system, the series with focus is copied. If neither series has focus, both series are copied.

3 To view an image or series copied to a reference window, click on the corresponding reference tab in the header area of the review monitor, or refer to the appropriate window or viewport in the examination room.

8.12 Creating a Snapshot

You can create a snapshot of an image, including any annotations on the image. Snapshots are stored in the relevant patient study as photo images.

1 Navigate to the desired image.

2 Do one of the following:



- In the toolbar, click **Copy as photo image**.



- Right-click on the image and select **Copy as photo image**.

The snapshot is stored as a photo image within the patient study.

8.13 Flagging Images

You can flag one or more images to create a selection for exporting or printing.



1 To flag a particular image, use the navigation toolbar to display the image, and then click **Flag** in the toolbar.

You can display and flag other images in the series using this method.



2 To flag all images in the current series, click the arrow next to the **Flag** tool in the toolbar and select **Flag Series**.

Images that have been flagged display a flag symbol in the upper-right corner: 

8.14 Creating Measurements

You can create measurements on images using the **Calibration and Measurements** task panel in the **Processing** task.

The following types of measurements are available:

- Distance
- Polyline
- Ratio
- Angle
- Open Angle

Measurements are saved with the images, and they are available if you open the images in another application on your system.

Calibration

Calibration is required to obtain absolute values with distance measurements. You can accept the automatic calibration factor if it is available in the series.



To accept the automatic calibration factor, click **Accept** in the **Calibration and Measurements** task panel.

When you accept the calibration factor, the information is added to the image information overlay on the image.

CAUTION
If you use auto calibration for measurements or quantitative analysis, the region of interest must be positioned as close to the isocenter as possible during acquisition. If the region of interest is not in the isocenter, the calibration factor will not be correct and measurements will not be accurate.

If auto calibration is not available, you should calibrate the series manually. For more information, see *Manual Calibration* (page 146).

NOTE ***If you accept the calibration factor, measurement values are displayed in millimeters. If you do not accept the calibration factor, measurement values are displayed in pixels.***

Accuracy
Accuracy of length measurements, when calibrated automatically, is ±5% when the measured object is in the isocenter and where the length of the object is at least 50 pixels on the monitor.

Accuracy of angle measurements is ±2 degrees.

8.14.1 Creating a Distance Measurement



1 Select the **Processing** task and click **Calibration and Measurements** to display the available measurement options.



2 If the automatic calibration factor is available, click **Accept**.

If the automatic calibration factor is not available, you should perform manual calibration before creating a measurement. For information, see *Manual Calibration* (page 146).



3 Click **Distance**.

4 Click in the image at the start point of the measurement, then click again at the end point.

The measurement and its value are displayed in the image.

5 To move a measurement, drag it to a new location.

6 To edit a measurement, drag an end point to a new location.



7 To delete a measurement, select the measurement and click **Delete** in the task panel.

You can also delete the selected measurement using Delete on the keyboard, or from the shortcut menu after right-clicking a measurement.

8.14.2 Creating a Polyline Measurement



1 Select the **Processing** task and click **Calibration and Measurements** to display the available measurement options.



2 If the automatic calibration factor is available, click **Accept**.

If the automatic calibration factor is not available, you should perform manual calibration before creating a measurement. For information, see *Manual Calibration* (page 146).



3 Click **Polyline**.

4 In the image, click at the start point of the line.

5 Click at intermediate points in the line.

You can set as many intermediate points as you want.

6 Double-click at the end point of the line.

7 To move a measurement, drag it to a new location.

8 To edit a measurement, do any of the following:

- Drag any of the points on the line to a new location.
- To delete a point, right-click the point and then click **Delete Point**.



9 To delete a measurement, select the measurement and click **Delete** in the task panel.

You can also delete the selected measurement using Delete on the keyboard, or from the shortcut menu after right-clicking a measurement.

8.14.3 Creating a Ratio Measurement

A ratio measurement displays the difference between two distances as a percentage.



1 Select the **Processing** task and click **Calibration and Measurements** to display the available measurement options.



2 If the automatic calibration factor is available, click **Accept**.

If the automatic calibration factor is not available, you should perform manual calibration before creating a measurement. For information, see *Manual Calibration* (page 146).



3 Click **Ratio**.

4 Click in the image at the start point of the first distance line, then click again at the end point.

5 Click at the start point of the second distance line, then click again at the end point.

The two distance lines are displayed in the image, and the ratio of the second distance to the first distance is indicated.

6 To move a measurement, drag it to a new location.

7 To edit a measurement, drag an end point to a new location.



8 To delete a measurement, select the measurement and click **Delete** in the task panel.

You can also delete the selected measurement using Delete on the keyboard, or from the shortcut menu after right-clicking a measurement.

8.14.4 Creating an Angle Measurement

An angle measurement displays the angle between two angle legs that are joined at the apex.



1 Select the **Processing** task and click **Calibration and Measurements** to display the available measurement options.



2 If the automatic calibration factor is available, click **Accept**.

If the automatic calibration factor is not available, you should perform manual calibration before creating a measurement. For information, see *Manual Calibration* (page 146).



3 Click **Angle**.

4 Click in the image at the end of the first angle leg.

5 Click at the apex of the angle.

6 Click at the end of the second leg.

The angle and its value are displayed in the image.

7 To move a measurement, drag it to a new location.

8 To edit a measurement, drag an end point or the apex to a new location.



9 To delete a measurement, select the measurement and click **Delete** in the task panel.

You can also delete the selected measurement using Delete on the keyboard, or from the shortcut menu after right-clicking a measurement.

8.14.5 Creating an Open Angle Measurement

An open angle measurement displays the angle between two lines that are not joined at an apex.



1 Select the **Processing** task and click **Calibration and Measurements** to display the available measurement options.



2 If the automatic calibration factor is available, click **Accept**.

If the automatic calibration factor is not available, you should perform manual calibration before creating a measurement. For information, see *Manual Calibration* (page 146).



3 Click **Open Angle**.

4 Click in the image at the start point of the first line, then click again at the end point.

5 Click at the start point of the second line, then click again at the end point.

The two lines and the value of the angle between them are displayed in the image.

6 To move a measurement, drag it to a new location.

7 To edit a measurement, drag an end point to a new location.



8 To delete a measurement, select the measurement and click **Delete** in the task panel.

You can also delete the selected measurement using Delete on the keyboard, or from the shortcut menu after right-clicking a measurement.

8.14.6 Manual Calibration

To ensure accurate measurements, the measurement function must be calibrated.

You can perform manual calibration using one of the following methods:

- **Catheter**
- **Distance**
- **Sphere**

NOTE ***When performing manual calibration on biplane images, you must perform calibration on frontal image and the lateral image separately.***

Catheter Calibration

You perform catheter calibration by tracing the centerline of a catheter in the image.

You can perform catheter calibration on either a straight catheter segment or a curved segment, but you should always use a non-tapered segment. Using a tapered segment for calibration will result in incorrect measurement results.



1 In the **Calibration and Measurements** task panel, click **Manual Calibration** to display the **Calibration** dialog box.

2 In the **Cal. Method** list, select **Catheter**.



3 If you want to change the series on which to perform calibration, click **Change** and select an available series.

The currently selected series is used by default. The selected series number is displayed in the task panel.



4 Click **Draw** in the control panel and do the following:

- Click on the centerline of the catheter at the desired start point.
- Click again to place a point further along the centerline.
- Continue placing points along the centerline, and then double-click at the desired end point.



For additional information, click **Help** in the control panel.



5 To hide or show the contour of the catheter as you work, select or clear **Hide** in the control panel.



6 To edit a contour, click **Edit** in the control panel, and do one of the following:

- Click along the walls of the catheter in the image and then double-click on the last position to complete the contour.
- Drag along the walls of the catheter in the image to correct the position of the contour.

7 When the contours are complete, select the catheter size from the list in the control panel.

If the desired catheter size is not available, you can type it directly in the box.



8 You can delete the calibration at any time and start over by clicking **Delete** in the task panel.



9 To complete manual calibration, click **Accept and Close**.

Distance Calibration

You perform distance calibration by marking a known distance in the image.



1 In the **Calibration and Measurements** task panel, click **Manual Calibration** to display the **Calibration** dialog box.

2 In the **Cal. Method** list, select **Distance**.



3 If you want to change the series on which to perform calibration, click **Change** and select an available series.

The currently selected series is used by default. The selected series number is displayed in the task panel.



4 Click **Draw** in the control panel and do the following:

- Click in the image at the desired start point of the line.
- Click again at the desired end point.



5 To hide or show the line, select or clear **Hide** in the control panel.



6 To edit the line, click **Edit** in the control panel, and do the following:

a Move the pointer over the start point or the end point

b Drag the point to a new position.

7 After drawing the line, select the distance in the list in the control panel.

If the desired distance is not available, you can type it directly in the box.



8 You can delete the calibration at any time and start over by clicking **Delete** in the task panel.



9 To complete manual calibration, click **Accept and Close**.

Sphere Calibration

You perform sphere calibration by identifying a sphere of a known size in the image.



1 In the **Calibration and Measurements** task panel, click **Manual Calibration** to display the **Calibration** dialog box.

2 In the **Cal. Method** list, select **Sphere**.



3 If you want to change the series on which to perform calibration, click **Change** and select an available series.

The currently selected series is used by default. The selected series number is displayed in the task panel.



4 Click **Draw** in the control panel.

5 Click a sphere in the image to identify it.



6 To hide or show the sphere contour, select or clear **Hide** in the control panel.



7 To edit the sphere, click **Edit** in the control panel, and do any of the following:
- To move the sphere, drag the center of the sphere to a new position.
- To change the diameter of the sphere, drag the circumference of the sphere.

8 When the sphere is defined, select the diameter in the list in the control panel.

If the desired diameter is not available, you can type it directly in the box.



9 You can delete the calibration at any time and start over by clicking **Delete** in the task panel.



10 To complete manual calibration, click **Accept and Close**.

9 Exporting and Printing

The following sections provide information about how to export the images that you acquired during a patient study. Printing functions are also provided on the system if a printer is available.

9.1 Exporting Data

You can export locally stored data to network locations or to storage devices in either DICOM or PC formats.

You can export complete studies or selected series and images from a study to a network location, a DICOM archive, or to a storage device such as USB flash memory drives or CD/DVD.

When you export biplane images, the frontal and lateral images are always exported together.

You can export images in the following formats:

Destination	Supported Formats
USB memory device	DICOM, PNG, MPEG4
PACS, Xcelera, MultiModality Viewer	DICOM
DVD	DICOM, PNG, MPEG4

CAUTION
Do not use images in PNG or MPEG4 format for diagnostic purposes. Such images are for non-diagnostic viewing only.

You can also configure the system to export data automatically when you acquire images or when you close a study, by customizing the export protocols in use. For more information about customizing export protocols and automatic data transfer, see *Configuring Export Protocols* (page 242) and *Configuring Automatic Data Transfer* (page 244).

NOTE ***Export protocols and automatic data transfer settings can only be customized by a system administrator.***

9.1.1 Exporting Data to a USB Flash Memory Drive

You can export data from either the **Series** task or from the patients list to a USB flash memory drive in either DICOM or PC format, allowing you to view the study, series, or images on another system or computer.

Ensure you have the desired study open in the **Series** task in the review window, or that you have the patients list open and the study available.

You can select images or series to export and you can export more than one study, series, or image at a time.

NOTE ***When handling personal data, do so in accordance with the privacy policies that apply in your healthcare environment and privacy laws that apply in your region.***

1 Ensure that the appropriate level of patient information is displayed in the images using the **Image overlays** tool in the global tools panel.

2 Insert a USB flash memory drive into one of the USB ports at the side of the left monitor.

Regardless of the position of the review and acquisition monitors (left or right) within the control room, the USB ports are always situated in the left monitor.

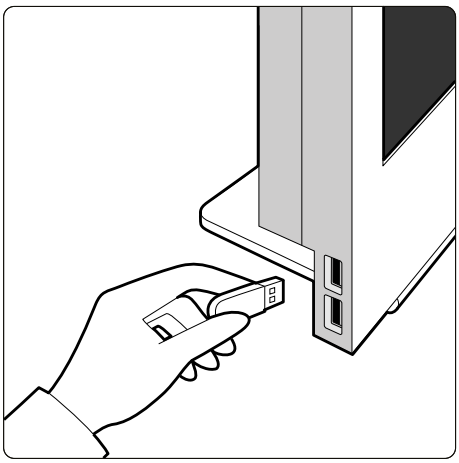

Figure 72 Inserting a USB flash memory drive

If the device is password-protected, enter the password in the dialog box displayed and click **Unlock**.

3 Select the studies, series or images you want to export.

To select more than one study, series, or image at a time, do one of the following:

- In the **Series** task, hold down the Ctrl key and click each of the images or series you want to export.
- In the **Series** task, click the first image or series you want to export and then click the check box in the top left corner of each additional pictorial you want to select.
- In the patients list, hold down the Ctrl key and click each of the studies you want to export.

NOTE ***Biplane series are always displayed with the frontal series and lateral series side by side in the Series task. When you select a biplane series, the corresponding series on the other channel is also selected.***



4 Do one of the following:

- In the **Series** task, right click one of the selected pictorials and select **Save To**.
- In the patients list, click **Save To**.

The **Save To** dialog panel is displayed.

5 Ensure **Selected images** is selected.

To change the images you want to export, you can choose one of the following options:

- **Selected images** [1]
- **Selected series**
- **All series** [2]
- **All acquired series**
- **Photo images**
- **Reference images**
- **Flagged images**

[1] This option is only available if you have selected specific images to export.

[2] This option is not available if you have selected specific images to export.

The series or images being exported are listed below your selection.

6 To select a DICOM format for export, do the following:

a Select the **Format** to use for exporting, from the **DICOM Formats** section of the drop-down list.

For all DICOM formats, the list displays the export protocols available. For more information on changing export protocol settings, see *Configuring Export Protocols* (page 242).

b To include a standard DICOM viewer on the USB drive, select **Include DICOM Viewer**.

7 To select a PC format for export, do the following:

a Select the **Format** to use for exporting, from the **PC Formats** section of the drop-down list.

You can select a PC format which allows you to export a series as an MPEG4 movie, and images as PNG photos.

b Enter a filename for the exported data.

If you are exporting more than one series or image, each file will be exported using the name you enter with a consecutive number added.



8 Select **USB** in the **Destination** list.

The amount of free space on the USB drive is displayed with a colored bar:
- Green: more than 20% space is available
- Orange: between 10% and 20% space is available
- Red: less than 10% space is available

The default destination for a USB drive is the root folder of the drive.

9 To select a subfolder within the USB drive, do the following:

a Click **Browse**.

b Select the desired subfolder.

c Click **OK**.

10 To de-identify the images, do the following:

a Select **De-Identify**.

b For each of the patients listed, enter an alternative **De-Identified Name**.

NOTE ***Personal data in photo images cannot be de-identified.***

11 Click **Save** to export the data.

12 Click **Cancel** to close the dialog panel without exporting data.

9.1.2 Exporting Data to CD/DVD

You can export data from either the **Series** task or from the patients list to a CD/DVD in either DICOM or PC format, allowing you to view the study, series, or images on another system or computer.

NOTE ***CD-RW is an unreliable medium and is not recommended for archiving purposes.***

Ensure you have the desired study open in the **Series** task in the review window, or that you have the patients list open and the study available.

You can select images or series to export and you can export more than one study, series, or image at a time.

NOTE ***When handling personal data, do so in accordance with the privacy policies that apply in your healthcare environment and privacy laws that apply in your region.***

1 Select the studies, series or images you want to export.

To select more than one study, series or image at a time, do one of the following:

- In the **Series** task, hold down the Ctrl key and click each of the images or series you want to export.
- In the **Series** task, click the first image or series you want to export and then click the check box in the top left corner of each additional pictorial you want to select.
- In the patients list, hold down the Ctrl key and click each of the studies you want to export.

NOTE ***Biplane series are always displayed with the frontal series and lateral series side by side in the Series task. When you select a biplane series, the corresponding series on the other channel is also selected.***



2 Do one of the following:
- In the **Series** task, right click one of the selected pictorials and select **Save To**.
- In the patients list, click **Save To**.

The **Save To** dialog panel is displayed.

3 Ensure **Selected images** is selected.

To change the images you want to export, you can choose one of the following options:
- **Selected images** [1]
- **Selected series**
- **All series** [2]
- **All acquired series**
- **Photo images**
- **Reference images**
- **Flagged images**

[1] This option is only available if you have selected specific images to export.

[2] This option is not available if you have selected specific images to export.

The series or images being exported are listed below your selection.

4 To select a DICOM format for export, do the following:

a Select the **Format** to use for exporting, from the **DICOM Formats** section of the drop-down list.

For all DICOM formats, the list displays the export protocols available. For more information on changing export protocol settings, see *Configuring Export Protocols* (page 242).

b To include a standard DICOM viewer on the CD/DVD, select **Include DICOM Viewer**.

5 To select a PC format for export, do the following:

a Select the **Format** to use for exporting, from the **PC Formats** section of the drop-down list.

You can select a PC format which allows you to export a series as an MPEG4 movie, and images as PNG photos.

b Enter a filename for the exported data.

If you are exporting more than one series or image, each file will be exported using the name you enter with a consecutive number added.



6 Select **DVD** in the **Destination** list.

7 To de-identify the images, do the following:

a Select **De-Identify**.

b For each of the patients listed, enter an alternative **De-Identified Name**.

NOTE ***Personal data in photo images cannot be de-identified.***

8 Click **Save** to export the data.

9 Click **Cancel** to close the dialog panel without exporting data.

If the exporting process is interrupted for any reason while the disc is being written, for example by restarting the system while the export is still in progress, it is possible that the external CD/DVD drive fails to open. If the external CD/DVD drive fails to open or cannot be opened as normal following a failed export process, switch the external CD/DVD drive off or disconnect its power cable. When you switch the external CD/DVD drive on again, the disc tray should open normally.

9.1.3 Exporting Data to a PACS

If the system is connected to a Picture Archiving and Communication System (PACS) network location, you can export DICOM format data to the selected PACS.

NOTE ***When handling personal data, do so in accordance with the privacy policies that apply in your healthcare environment and privacy laws that apply in your region.***

This procedure can be performed from either the **Series** task or from the patients list.

Ensure you have the desired study open in the **Series** task in the review window, or that you have the patients list open and the study available.

1 Select the studies, series or images you want to export.

To select more than one study, series or image at a time, do one of the following:
- In the **Series** task, hold down the Ctrl key and click each of the images or series you want to export.
- In the **Series** task, click the first image or series you want to export and then click the check box in the top left corner of each additional pictorial you want to select.
- In the patients list, hold down the Ctrl key and click each of the studies you want to export.

NOTE ***Biplane series are always displayed with the frontal series and lateral series side by side in the Series task. When you select a biplane series, the corresponding series on the other channel is also selected.***



2 Do one of the following:
- In the **Series** task, right click one of the selected pictorials and select **Save To**.
- In the patients list, click **Save To**.

The **Save To** dialog panel is displayed.

3 Ensure **Selected images** is selected.

To change the images you want to export, you can choose one of the following options:
- **Selected images** [1]
- **Selected series**
- **All series** [2]
- **All acquired series**
- **Photo images**
- **Reference images**
- **Flagged images**

[1] This option is only available if you have selected specific images to export.

[2] This option is not available if you have selected specific images to export.

The series or images being exported are listed below your selection.

4 Select the **Format** to use for exporting, from the **DICOM Formats** section of the drop-down list.

For all DICOM formats, the list displays the export protocols available. For more information on changing export protocol settings, see *Configuring Export Protocols* (page 242).

Data exported in PC formats cannot be exported to PACS locations.



5 Select the desired PACS network location in the **Destination** list.

6 To de-identify the images, do the following:

a Select **De-Identify**.

b For each of the patients listed, enter an alternative **De-Identified Name**.

NOTE ***Personal data in photo images cannot be de-identified.***

7 Click **Save** to export the data.

8 Click **Cancel** to close the dialog panel without exporting data.

9.1.4 Exporting Data Using Drag and Drop

You can export studies or series quickly by dragging and dropping the desired data directly from the patient list.

Ensure that the desired patient study is available in the patients list. If the device that you want to copy to is password-protected, ensure that you know the password.

Ensure that the default export protocol is set as desired; this protocol is used when you export using drag and drop. For more information on setting the default export protocol, see *Configuring Export Protocols* (page 242).

NOTE ***When handling personal data, do so in accordance with the privacy policies that apply in your healthcare environment and privacy laws that apply in your region.***



1 Open the patient database by clicking the patient selector in the upper left corner of the the review window.

2 To export a study using drag and drop, do the following:

a Select the desired study in the patient list.

b Drag and drop the study from the patients list onto the desired device or network location to the left.



If the data cannot be exported to the desired location for any reason, the pointer changes to indicate this.

3 To export a series from a study, do the following:

a Select the desired study in the patient list.

b Select the **Series** tab.

c Drag and drop the desired series from the series list onto the desired device or network location to the left.



If the data cannot be exported to the desired location for any reason, the pointer changes to indicate this.

9.2 Printing

You use the print preview function to select images and dose reports and compose a print job for the active study. You can then print the job on transparent film or on paper, using any printer that is connected to the system.

Printing is performed in the background, so that there is no interference with the clinical workflow.

NOTE ***When handling personal data, do so in accordance with the privacy policies that apply in your healthcare environment and privacy laws that apply in your region.***

1 Use the navigation toolbar to display the image that you want to print in the main window.



2 Click **Add to Print Preview** in the global tools panel.

NOTE ***If you add a biplane image to Print Preview, both the frontal and lateral images are added. If Optimize for biplane image printing is selected in the Print application settings, they are printed side by side unless you change the page layout to 1x1 or a single column. For more information, see*** ***Changing Print Settings (page 231)******.***



3 To launch the print application, click **More Tools** and select **Print Preview**.

4 To add more images to the print preview, do the following:



a Click the viewer application tab.



b Select the **Series** task.

c Click the image to add in the task control panel.



d Click **Add to Print Preview** in the global tools panel.



e To return to the print application, click the print tab.

5 Select the following settings using the drop-down lists in the control panel.

- Printer
- Media size
- Media type (only applicable for DICOM printers)
- Orientation
- Page layout
- Image information
- Number of copies

6 To de-identify the images, do the following:

a Select **De-Identify**.

NOTE ***Dose reports cannot be de-identified.***

b For each of the patients listed, enter an alternative **De-Identified Name**.

7 Select the pages or page range you want to print.

Selecting **All** prints all of the pages in the print job.

If you want to print specific pages only, select the page range radio button and enter the pages or range of pages you want to print.

To print a single page, enter the page number.

To print a page range, enter the page range using a dash. For example, to print pages 1 to 5, enter 1-5.

To print single pages and page ranges together, separate the page numbers with a comma. For example, to print pages 1 to 5 and page 8 only, enter 1-5, 8.



8 To delete all images from the print job and start over, click **Clear Preview** in the control panel.

9 To delete selected images from the print job, do the following:

a Select the image to be deleted in the print preview.

Images can be selected in the print preview by selecting the check box in the top left corner of the image.



b Click **Delete Selected Images**.

10 Select how you want the pages collated.

- **Collated**
- **Uncollated**

If you print more than one copy of the print job, or more than one copy of a page range, you can choose to collate the pages. If you select collated pages, each copy of the print job is printed individually in page order. If you select uncollated pages, all copies of each page are printed together.



11 Click **Print** to print the print job or the selected pages.

9.3 Viewing System Tasks in the Job Viewer

Using the job viewer, you can see import, export, and print tasks being carried out by the system.

The job viewer displays tasks that are waiting or that resulted in errors and allows you to see what errors were encountered.

You can also delete, abort, or repeat jobs.



1 On the **System** menu, click **Job Viewer**.

The job viewer is displayed.

The job viewer contains tabs for each type of task:

- **All Jobs**
- **Export**
- **Import**
- **Print**
- **MPPS**

NOTE ***The MPPS tab is only shown if a Modality Performed Procedure Step Manager is enabled. For more information, see Configuring Worklist Management and the Modality Performed Procedure Step (MPPS) Manager (page 239).***



If an error is encountered, the relevant tab displays a warning symbol.

2 Click on the relevant tab to find the job you are looking for.

Each tab displays the following information for each task:

- **Name**
- **Type**
- **Location**
- **Status**
- **Submitted Time**
- **Progress**

3 Select the job in the list.



4 To see more information about a task, click **More Info**.

More details about the task are displayed including any error messages and any available recommendations for action.

Close the job details by clicking **Close**.



5 To delete a task, click **Delete**.



6 To cancel a task which is running or waiting, click **Cancel**.



7 To restart or repeat a task, click **Redo**.

8 To close the job viewer, click **Close**.

10 2D Quantitative Analysis (Option)

The information in this section applies to 2D Quantitative Analysis Release 1.0.

2D Quantitative Analysis is a dedicated suite of analysis applications that allow you to obtain quantitative information about coronary arteries, peripheral arteries, and ventricles.

10.1 Intended Use of 2D Quantitative Analysis

Device Description
"2D Quantitative Analysis" (2D-QA) is a software device that assists the user with quantification of
- vessels and vessel obstructions,
- ventricular volumes and
- ventricular wall motion

from angiographic X-ray images. The software provides semi-automatic contour detection of vessels, catheters and the left ventricle in angiographic X-ray images. 2D-QA implements computational models for the quantification of vessels, obstructions in vessels, ventricular volumes and ventricular local wall motion from 2D contours.

Medical Purpose
"2D Quantitative Analysis" (2D-QA) is a post processing software medical device intended to assist physicians through providing quantitative information as additional input for their comprehensive diagnosis decision making process and planning during cardiovascular procedures and for post procedural evaluation. 2D-QA consists of six applications:

The "2D Quantitative Coronary Analysis" application is intended to be used for quantification of coronary artery dimensions (approximately 1 to 6 mm) from 2D angiographic images.

The "2D Quantitative Vascular Analysis" application is intended to be used for quantification of aortic and peripheral artery dimensions (approximately 5 to 50 mm) from 2D angiographic images.

The "2D Left Ventricle Analysis" and the "Biplane 2D Left Ventricle Analysis" applications are intended to be used for quantification of left ventricular volumes and local wall motion from monoplane and from biplane angiographic series, respectively.

The "2D Right Ventricle Analysis" and the "Biplane 2D Right Ventricle Analysis" applications are intended to be used for quantification of right ventricular volumes and local wall motion from monoplane and from biplane angiographic series, respectively.

Patient Population
The "2D Quantitative Analysis" software device is suitable for patients with a (suspected) cardiovascular disease who undergo an angiographic cardiovascular procedure.

Intended Operator Profile
The "2D Quantitative Analysis" device is intended to be used and operated by or under supervision of a physician who is fully skilled and responsible for sound clinical judgment, and for applying the best clinical procedure.

Contact with body part / tissue type
"2D Quantitative Analysis" is a software medical device and does not come in contact with the patient.

Clinical Environment

The “2D Quantitative Analysis” device may be used in the control room and in the exam room of an interventional suite or operating room.

General safety and effectiveness

To facilitate safe and efficacious operation of the system by a trained healthcare professional, instructions for use are provided as part of the device labeling, as well as training at system handover.

Operating principle

“2D Quantitative Analysis” provides quantification of vessel and ventricle parameters based on semiautomatic analysis of 2D angiographic X-ray images.

10.2 Acquiring X-ray Images

Accurate results in 2D-QA can only be obtained with good quality images of the correct type and after performing an accurate calibration. The following sections provide guidance for acquiring images for use in 2D-QA.

CAUTION
You should take steps to prevent foreshortening in images to be used for analysis or calibration in 2D-QA.

CAUTION
If you intend to use auto calibration during analysis, the object under investigation should be placed as close to the isocenter as possible during image acquisition (within at most 5 cm).

CAUTION
Analysis results may not be accurate if the geometry positions of the calibration image and the analysis image are different.

CAUTION
Analysis results may not be accurate if you use catheter calibration with a catheter that is less than 6 French.

CAUTION
LVA / RVA analysis results may not be accurate if the acquisition angles of the series used for analysis are out of range for the selected LVA / RVA volume model or regression formula.

CAUTION
RVA cannot be used with monoplane pediatric RV series.

General Guidance

- 2D-QA only supports exposure images.
- Objects under investigation should be evenly filled with contrast agent. If the contrast between an object and its background is insufficient, the semi-automatic contour detection process cannot detect contours properly. It is your responsibility to review all contours detected by the system, and to correct the contours when necessary.
- Avoid using images with insufficient image quality, such as low contrast, high noise, or overlapping structures.

Guidance for QCA and QVA

- Prevent foreshortening of objects by using projections where the object under analysis is in a plane parallel to the image detector.
- Avoid imaging with strong noise, background structures, or overlapping vessels.
- Avoid imaging at 50/60 fps as the decreased resolution in these images affects the accuracy of the results.

Guidance for LVA and RVA

- Use an acquisition speed of at least 15 fps to allow selection of images from non-ectopic beats and in a proper end-diastolic and end-systolic phase.
- Acquire images from angles as prescribed for the various volume and wall motion methods.
- Instruct the patient in the use of breath-holding techniques for acquisition of images for wall motion analysis.

10.3 Starting 2D Quantitative Analysis



1 Click the **Processing** task to display the image processing tools.



2 Click **Measurements** to display the **Measurements** task panel.

3 In the **Open Analysis Tool** section, click the desired analysis tool button to start the analysis.



- **Quantitative Coronary Analysis**



- **Quantitative Vascular Analysis**



- **Left Ventricular Analysis**



- **Biplane Left Ventricular Analysis**



- **Right Ventricular Analysis**



- **Biplane Right Ventricular Analysis**

NOTE ***To open only the frontal image or the lateral image of a biplane series in an analysis application, right-click the image, point to Open With, and then click a monoplane application.***

10.4 Calibration Guidelines

A projection of an anatomical object on an X-ray detector is geometrically magnified. If you want to perform a realistic measurement in the corresponding X-ray image, you have to compensate for that magnification. This is done through performing a calibration on the X-ray image, and determining a calibration factor (CF) in units of millimeter/pixel.

There are two main types of calibration:

- Auto calibration can be used when the anatomy is in isocenter. For objects at this location, 2D-QA knows all relevant distances that are needed for automatic computation of the geometrical magnification and the calibration factor. No further user input is required.
- Manual calibration is applicable for any location in the X-ray beam. The calibration factor for the anatomy under investigation is computed with help of a calibration object of known size positioned nearby. The user marks the calibration object and indicates its actual size.

Note that errors in the calibration factor directly translate into proportional errors in QCA/QVA distance measurements. In the computation of volumes in LVA/RVA, these errors even multiply by a factor of 2 to 3. Therefore it is important to adhere to the following guidelines for accurate calibration.

Avoid foreshortened views on the calibration object and the anatomy.

- This is important in distance calibration and for all measurements in anatomical regions of interest.

Position the calibration object and the object under investigation accurately.

- If you intend to use auto calibration, the object under investigation must be placed as close to the isocenter as possible during image acquisition (within at most 5 cm).
- If you intend to use manual calibration (catheter, sphere, or distance), the calibration object must be placed as close as possible to the anatomy under investigation.
- Differences in height between the anatomy and the isocenter (in auto calibration), or between the anatomy and the calibration object (in manual calibration) cause differences in geometrical magnification. This leads to additional errors in the calibration factor of 1-1.5% for each centimeter of difference in height.

Auto calibration, or intermediate sized objects for manual Calibration, is preferred.

- Preferably use auto calibration when the anatomy under investigation is sufficiently close to the isocenter (within at most 5 cm). Most images are usually acceptable for auto calibration.
- In case auto calibration is not applicable, catheter calibration is usually considered as the most convenient option. However, when used in combination with modern small-diameter (4-6 French) catheters, it is also the least accurate option (see the following table). If possible, use distance calibration on a sizing catheter or sphere calibration instead.
- In general, the accuracy of manual calibration increases with the object size or distance used. Do not use small calibration objects for manual calibration. If possible, choose a calibration object of intermediate size (a few centimeters) for optimal accuracy.

Overview of Calibration Factor Accuracy

Calibration method (specification condition)	CF accuracy for properly positioned objects	Additional errors in CF from inaccurate positioning or views
Auto calibration	Accurate [1]	1-1.5% for each centimeter of difference in height between isocenter and anatomy
Distance calibration (over distance of a few cm)	Accurate [1]	1-1.5% for each centimeter of difference in height between object and anatomy. This method is sensitive to foreshortening in the image
Sphere calibration (with metal ball of a few cm diameter)	Accurate [1]	1-1.5% for each centimeter of difference in height between sphere and anatomy
Catheter calibration [2] (catheter of 6 French diameter filled with contrast agent)	Less accurate: approximately 7% error introduced [3]	1-1.5% for each centimeter of difference in height between catheter and anatomy

Note 1: Accurate means that the small deviation from this source does not adversely affect overall measurement accuracy.
Note 2: As verified for commonly used catheters. Due to the small diameter of modern catheters and diversity in their walls, obtainable accuracies may vary with catheter brand and size.
Note 3: Errors from using unfilled catheters or catheters below 6 French can be 20% or more.

Errors in the calibration factor propagate proportionally into QCA/QVA distance measurement. Relative errors multiply with a factor of approximately 2 to 3 in the LVA/RVA computations of absolute ventricle volumes. Ejection fraction, however, is not affected by these calibration inaccuracies.

Guidance for Manual Catheter Calibration

- Use a radiopaque catheter.
- Use a filled catheter to improve detection and accuracy.
- Philips Medical Systems does not recommend catheter calibration on empty catheters or catheters below 6 French, as this may lead to an inaccurate calibration factor. The error can be 20% or more. 2D-QA does not support catheters below 4 French.
- To improve accuracy, avoid low dose and high frame rates.

Guidance for Manual Sphere Calibration

It is possible to use two different series for imaging the sphere and the anatomy under investigation. However, ensure that the sphere and the anatomy have the same geometrical magnification in the X-ray image. This means that the images are acquired with the following characteristics:

- The same X-ray focus-object distance and same object-detector distance.
- The same angulation and rotation angles.
- The same table height.

Checking calibration accuracy for your preferred catheter

1. Position a catheter and a ruler close together, acquire images, and then perform catheter calibration.
2. In the X-ray image perform a QCA length measurement along the catheter between two marks on the ruler and compare your result with the actual distance from the ruler.

10.5 QCA / QVA

The QCA and QVA applications have similar tasks, and they are described together in the following sections.

Quantitative Coronary Analysis (QCA)

You use QCA to mark the contours of a coronary artery in the heart, analyze a stenosis, and create, store and print reports of the analysis.

Quantitative Vascular Analysis (QVA)

You use QVA to mark the contours of aortic and peripheral arteries, analyse a stenosis, and create, store and print reports of the analysis.

10.5.1 QCA / QVA Tasks

A set of predefined tasks is used to ensure coronary or vascular analysis is performed in a logical way.

The QCA and QVA applications provide the following tasks in order:

- **Select Series**
- **Calibration**
- **Analysis**
- **Result**

When a series is selected, the system progresses automatically to the **Calibration** task.

When the calibration factor is accepted, the system progresses automatically to the **Analysis** task.

NOTE ***Auto calibration is available if the appropriate image attributes in the selected series (source image distance, source object distance, and image plane pixel spacing) did not change during acquisition. If you choose auto calibration in this case, ensure that the region of interest is in the isocenter.***

10.5.2 Select Series Task

You use the **Select Series** task to select an image series for analysis.

NOTE ***Only XA exposure images can be used for analysis.***

NOTE ***Series with image pixel sizes greater than 0.225 mm for QCA and greater than 0.4 mm for QVA are suboptimal for analysis.***

NOTE ***You can decrease the detector field size or decrease the frame speed to obtain smaller pixel sizes.***



1 Click **Select Series** in the task panel.

2 Select the desired image series in the **Select Series** dialog box and click **Select** to open the series.

10.5.3 Calibration Task

To allow accurate measurement during analysis and to ensure that measurements are displayed in relevant units, the image must be calibrated.

NOTE ***You can configure default settings for calibration using the Customization screen. For details, see Changing Default Calibration Settings (page 185).***

You can perform calibration automatically or manually using the **Calibration** task.

Conditions

For accurate manual calibration, follow these guidelines:

- Position the calibration object close to the position of the anatomy under investigation.
- Choose a calibration object of intermediate size (a few centimeters) for optimal accuracy.

For manual catheter calibration, follow these guidelines:

- Use a radiopaque catheter.
- Use a filled catheter to improve detection.
- Use catheters for calibration that are at least 6 French. Catheters below 4 French are not supported.
- Ensure that the external catheter size as provided by the manufacturer is accurate.

Ensure that the image quality is good and that the contrast between the calibrating object and the background is good.

Automatic Calibration

2D-QA can calculate the calibration factor automatically if the required information is available in the image series.



1 Click the **Calibration** task.

The **Auto** calibration method is automatically selected if the required information is available in the image series.



2 To accept the calibration factor, click **Accept and Continue**.

Manual Calibration

You can perform manual calibration using one of the following methods:

- **Catheter**
- **Distance**
- **Sphere**

Catheter Calibration

You perform catheter calibration by tracing the centerline of a catheter in the image.

You can perform catheter calibration on either a straight catheter segment or a curved segment, but you should always use a non-tapered segment. Using a tapered segment for calibration will result in incorrect measurement results.



1 Use the navigation toolbar to review the series and select an image to be used for calibration.

NOTE ***You can change the calibration image at any time by clicking Change in the control panel and selecting a different image.***



2 Click the **Calibration** task.

3 Click **Catheter** in the **Select calibration method** list.



4 Click **Draw** in the control panel and do the following:

- Click on the centerline of the catheter at the desired start point.
- Click again to place a point further along the centerline.
- Continue placing points along the centerline, and then double-click at the desired end point.



For additional information, click **Help** in the control panel.



5 To hide or show the contour of the catheter as you work, select or clear **Hide** in the control panel.



6 To edit a contour, click **Edit** in the control panel, and do one of the following:

- Click along the walls of the catheter in the image and then double-click on the last position to complete the contour.
- Drag along the walls of the catheter in the image to correct the position of the contour.

7 When the contours are complete, select the catheter size from the list in the control panel.

If the desired catheter size is not available, you can type it directly in the box.



8 You can delete the calibration at any time and start over by clicking **Delete** in the task panel.



9 To accept the calibration factor, click **Accept and Continue** in the control panel.

Distance Calibration

You perform distance calibration by marking a known distance in the image.



1 Use the navigation toolbar to review the series and select an image to be used for calibration.

NOTE ***You can change the calibration image at any time by clicking Change in the control panel and selecting a different image.***



2 Click the **Calibration** task.

3 Click **Distance** in the **Select calibration method** list.



4 Click **Draw** in the control panel and do the following:

- Click in the image at the desired start point of the line.
- Click again at the desired end point.



5 To hide or show the line, select or clear **Hide** in the control panel.



6 To edit the line, click **Edit** in the control panel, and do the following:

a Move the pointer over the start point or the end point

b Drag the point to a new position.



7 You can delete the calibration at any time and start over by clicking **Delete** in the task panel.

8 After drawing the line, select the distance in the list in the control panel.

If the desired distance is not available, you can type it directly in the box.



9 To accept the calibration factor, click **Accept and Continue** in the control panel.

Sphere Calibration

You perform sphere calibration by identifying a sphere of a known size in the image.



1 Use the navigation toolbar to review the series and select an image to be used for calibration.

NOTE ***You can change the calibration image at any time by clicking Change in the control panel and selecting a different image.***



2 Click the **Calibration** task.

3 Click **Sphere** in the **Select calibration method** list.

4 Click a sphere in the image to identify it.



5 To hide or show the sphere contour, select or clear **Hide** in the control panel.



6 To edit the sphere, click **Edit** in the control panel, and do any of the following:

- To move the sphere, drag the center of the sphere to a new position.
- To change the diameter of the sphere, drag the circumference of the sphere.



7 You can delete the calibration at any time and start over by clicking **Delete** in the task panel.

8 When the sphere is defined, select the diameter in the list in the control panel.

If the desired diameter is not available, you can type it directly in the box.



9 To accept the calibration factor, click **Accept and Continue** in the control panel.

10.5.4 Analysis Task

You use the **Analysis** task to identify and mark the contours of the coronary or vascular artery.

You can analyze subtracted and unsubtracted images in QVA, but you can analyze only unsubtracted images in QCA.

Defining the Region of Interest

You can define the contours of a region of interest automatically (“one-click” method), or by manually placing points along the centerline of the vessel.



At any time, you can delete the contours and start over by selecting **Delete** in the control panel.

Defining the Region of Interest Automatically

This is also known as the “one-click” method. Measurements and graphs are displayed when the region of interest is defined.



1 Click the **Analysis** task.



2 Click **Identify Vessel Segment** in the control panel.

3 Double-click on the stenosis in the center of the vessel to detect the contour of the vessel.

4 To adjust the contour, see *Editing the Contour* (page 166).

Detected contours may not be correctly aligned with the vessel wall if there is insufficient contrast in the image, or if a bifurcation or overlapping vessels are present.

Defining the Region of Interest Manually

This method allows you to define the region of interest by placing points along the centerline of the vessel. Measurements and graphs are displayed when the region of interest is defined.



1 Click the **Analysis** task.



2 Click **Identify Vessel Segment** in the control panel and do the following:

- Click the centerline of the vessel at the proximal part to place the start point of the region of interest.
- Continue placing points along the centerline and double-click to place the end point and to detect the contour of the vessel.

Editing the Contour

If the contour for the vessel segment is not satisfactory, you can edit the contour manually.

When editing a contour, you must start and finish the edit on the existing contour. The pointer changes to indicate that you are close enough to the contour.



For additional information, click **Help** in the control panel.



1 In the analysis task, click **Edit**.

2 To edit the contour by clicking, do the following:

- Click the contour at the start point of the section to be edited.
- Continue placing points along the vessel wall and then double-click on the contour at the end point of the edit.

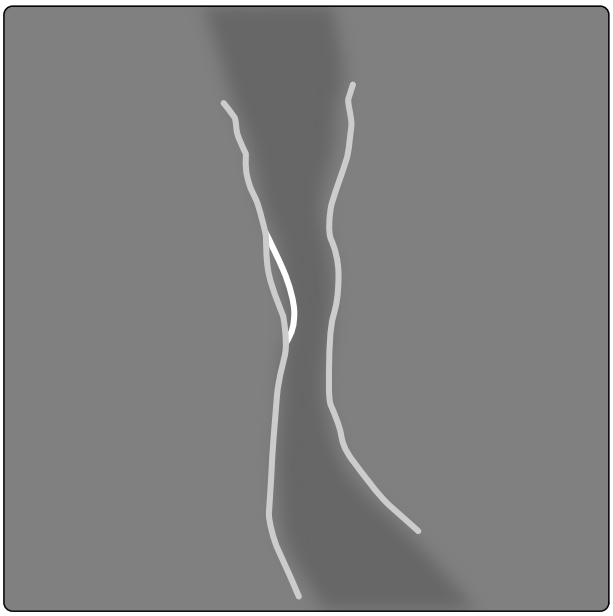

Figure 73 Editing the contour

3 To edit the contour by dragging, drag a point on the contour to the correct position on the vessel wall.



4 To undo your last edit, click **Undo Last Edit** in the control panel.

Adjusting Measurements

You can adjust the analysis measurements by moving reference lines in the image or in the graph.

When you move a reference line, diameters, lengths, and percentages are automatically updated in the **Analysis Results** panel.

When you move the minimum lesion diameter reference line, the reference lines in the image and in the graph are displayed at the new position, but the system-defined reference line is maintained.

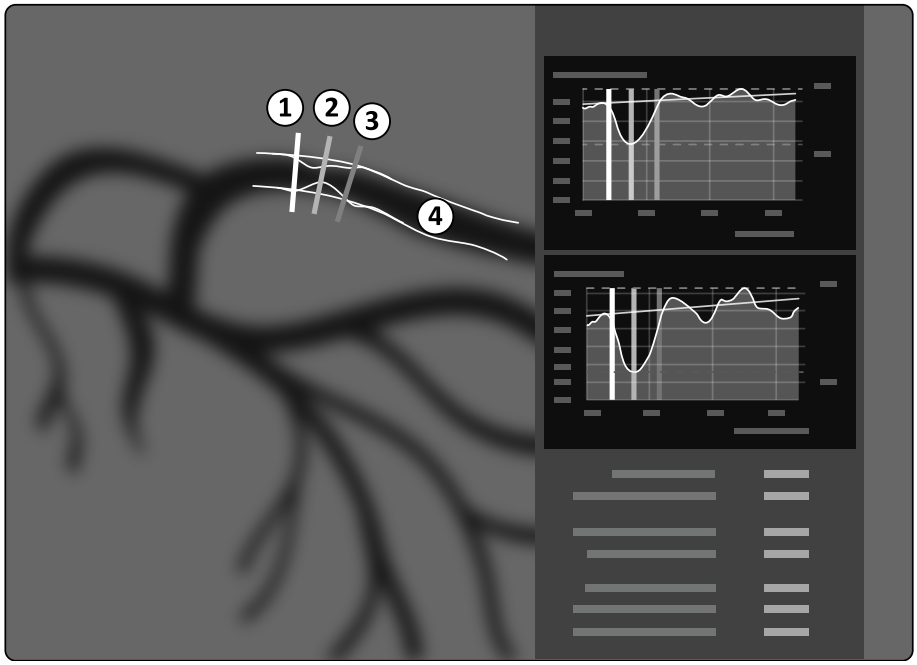

Figure 74 Stenosis measurement reference lines

Legend			
1	Proximal boundary	3	Distal boundary
2	Minimum lesion diameter (MLD)	4	Contour

1 To reposition the point of stenosis, drag the minimum lesion diameter to a new position.

2 To reposition the proximal boundary, drag the green reference line to a new position.

3 To reposition the distal boundary, drag the blue reference line to a new position.



4 To show or hide plaque within the segment, click **Show/Hide Plaque** in the control panel.



5 To show or hide the segment contour, click **Show/Hide Contour** in the control panel.

10.5.5 Result Task

You use the **Result** task to view analysis results from QCA and QVA.

The result page displays the analysis results, the analyzed image, and analysis graphs. Any warnings associated with the analysis results are also displayed.

Accuracy of QCA / QVA Results

QCA

QCA Analysis Results	Accuracy (Systematic Error)	Precision (Random Error)
Vessel diameter	< 0.2 mm (for diameters ≤ 1 mm) < 0.1 mm (for diameters > 1 mm)	< 0.2 mm
Vessel segment length	< 1.0 mm	< 2.0 mm

Vessel diameter accuracy is specified for measurements performed on a vessel placed in the isocenter, using automatic calibration.

Vessel segment length accuracy is specified for distances up to 50 mm between user-defined markers on an unforeshortened view of a vessel placed in the isocenter, using automatic calibration.

NOTE ***Using an inaccurate calibration factor (due to, for example, foreshortening, inaccurate position of the calibration object, or calibration on a small diameter catheter) may lead to additional errors in measured lengths and diameters.***

QVA

QVA Analysis Results	Accuracy (Systematic Error)	Precision (Random Error)
Vessel diameter	< 0.2 mm (for diameters ≤ 20 mm) < 1% (for diameters > 20 mm)	< 0.2 mm
Vessel segment length	< 1.0 mm	< 2.0 mm

Vessel diameter accuracy is specified for measurements performed on a vessel placed in the isocenter, using automatic calibration.

Vessel segment length accuracy is specified for distances up to 50 mm between user-defined markers on an unforeshortened view of a vessel placed in the isocenter, using automatic calibration.

NOTE ***Using an inaccurate calibration factor (due to, for example, foreshortening, inaccurate position of the calibration object, or calibration on a small diameter catheter) may lead to additional errors in measured lengths and diameters.***

References

Computations in 2D-QA are performed according to methods described in medical literature.

Author	Article
Reiber, J.H.C. et al.	On-line quantification of coronary angiograms with the DCI system. MedicaMundi, 34, no. 3, 1989. pp. 89-98.
Van der Zwet P.M.J. et al.	A new approach for the automated definition of path lines in digitized coronary angiograms. Int. J. Cardiac Imaging, 5, no. 2-3, 1990. pp. 75-83.
Van der Zwet, P.M.J. et al.	An on-line system for the quantitative analysis of coronary arterial segments. Computers in Cardiology, 1990.
Austen, W.G. et al.	A reporting system on patients evaluated for coronary artery disease. Report of the Ad Hoc Committee for grading of coronary artery disease. Council on Cardio-vascular Surgery, American Heart Association. Circulation 51, no. 2, 1975. pp. 7-40.
Reiber, J.H.C. et al.	Assessment of dimensions and image quality of coronary contrast catheters from cine angiograms. Catheterization and Cardio-vascular Diagnosis, 11, 1985, pp. 521-531.

10.6 LVA / RVA

The LVA and RVA applications have similar tasks, and they are described together in the following sections.

Additional steps that are required for Biplane LVA and Biplane RVA are indicated where appropriate.

Left Ventricle Analysis (LVA)

You use LVA to establish end diastolic (ED) and end systolic (ES) contours of the left ventricle, to determine ventricular volumes and wall motion. You can create, store and print reports of the analysis.

Right Ventricle Analysis (RVA)
You use RVA to establish end diastolic (ED) and end systolic (ES) contours of the right ventricle, to determine ventricular volumes and wall motion. You can create, store and print reports of the analysis.

10.6.1 LVA / RVA Tasks

A set of predefined tasks is used to ensure left or right ventricle analysis is performed in a logical way.

The LVA and RVA applications provide the following tasks in order:
- **Select Series**
- **Calibration**
- **End Diastole**
- **End Systole**
- **Result**

After you select a series, the **Calibration** task is automatically opened.

After you complete calibration, the **End Diastole** task is automatically opened.

NOTE ***Auto calibration is available if the appropriate image attributes in the selected series (source image distance, source object distance, and image plane pixel spacing) did not change during acquisition. If you choose auto calibration in this case, ensure that the region of interest is in the isocenter.***

10.6.2 Select Series Task

You use the **Select Series** Task to select a series for analysis.

NOTE ***Only XA exposure images can be used for analysis.***

NOTE ***Series with characteristics outside the following ranges are suboptimal for analysis:***
- ***Series with image pixel sizes greater than 1 mm.***
- ***Series with frame rate less than 15 fps.***
- ***Series captured with angulation and rotation angles that do match the angle requirements for the selected volume method/regression formula.***



1 Click **Select Series** in the tasks panel.

2 Select the desired image series in the **Select Series** dialog box and click **Select** to open the series.

10.6.3 Calibration Task

To allow accurate measurement during analysis and to ensure that measurements are displayed in relevant units, the image must be calibrated.

NOTE ***You can configure default settings for calibration using the Customization screen. For details, see Changing Default Calibration Settings (page 185).***

You can perform calibration automatically using Auto Calibration, or manually using the **Calibration** task.

If you are only interested in calculating the ejection fraction, you can skip calibration for monoplane LVA and monoplane RVA.

Conditions
For manual calibration, follow these guidelines:

- Position the calibration object close to the position of the anatomy under investigation.
- Choose a calibration object of intermediate size (a few centimeters) for optimal accuracy.
  For LVA/RVA, the use of catheter calibration is not recommended. Relative errors from calibration are multiplied by a factor of up to three when computing (ventricle) volumes.

For manual catheter calibration, follow these guidelines:

- Use a radiopaque catheter.
- Use a filled catheter to improve detection.
- Use catheters for calibration that are at least 6 French. Catheters below 4 French are not supported.
- Ensure that the external catheter size as provided by the manufacturer is accurate.

Ensure that the image quality is good and that the contrast between the calibrating object and the background is good.

Automatic Calibration

2D-QA can calculate the calibration factor automatically if the required information is available in the image series.



1 Click the **Calibration** task.

  The **Auto** calibration method is automatically selected if the required information is available in the image series.



2 To accept the calibration factor, click **Accept and Continue**.

Manual Calibration

You can perform manual calibration using one of the following methods:

- **Catheter**
- **Distance**
- **Sphere**

Catheter Calibration

You perform catheter calibration by tracing the centerline of a catheter in the image.

You can perform catheter calibration on either a straight catheter segment or a curved segment, but you should always use a non-tapered segment. Using a tapered segment for calibration will result in incorrect measurement results.



1 Use the navigation toolbar to review the series and select an image to be used for calibration.

  NOTE ***You can change the calibration image at any time by clicking Change in the control panel and selecting a different image.***



2 Click the **Calibration** task.

3 Click **Catheter** in the **Select calibration method** list.



4 Click **Draw** in the control panel and do the following:

  - Click on the centerline of the catheter at the desired start point.
  - Click again to place a point further along the centerline.
  - Continue placing points along the centerline, and then double-click at the desired end point.



For additional information, click **Help** in the control panel.



5 To hide or show the contour of the catheter as you work, select or clear **Hide** in the control panel.



6 To edit a contour, click **Edit** in the control panel, and do one of the following:
- Click along the walls of the catheter in the image and then double-click on the last position to complete the contour.
- Drag along the walls of the catheter in the image to correct the position of the contour.

7 If you are using **Biplane LVA/RVA**: Trace the centerline of the catheter in both the frontal image and the lateral image.

8 When the contours are complete, select the catheter size from the list in the control panel.

If the desired catheter size is not available, you can type it directly in the box.



9 You can delete the calibration at any time and start over by clicking **Delete** in the task panel.



10 To accept the calibration factor, click **Accept and Continue** in the control panel.

Distance Calibration

You perform distance calibration by marking a known distance in the image.



1 Use the navigation toolbar to review the series and select an image to be used for calibration.

NOTE ***You can change the calibration image at any time by clicking Change in the control panel and selecting a different image.***



2 Click the **Calibration** task.

3 Click **Distance** in the **Select calibration method** list.



4 Click **Draw** in the control panel and do the following:
- Click in the image at the desired start point of the line.
- Click again at the desired end point.



5 To hide or show the line, select or clear **Hide** in the control panel.



6 To edit the line, click **Edit** in the control panel, and do the following:

a Move the pointer over the start point or the end point

b Drag the point to a new position.

7 If you are using **Biplane LVA/RVA**: Mark the line in both the frontal image and the lateral image.



8 You can delete the calibration at any time and start over by clicking **Delete** in the task panel.

9 After drawing the line, select the distance in the list in the control panel.

If the desired distance is not available, you can type it directly in the box.



10 To accept the calibration factor, click **Accept and Continue** in the control panel.

Sphere Calibration

You perform sphere calibration by identifying a sphere of a known size in the image.



1 Use the navigation toolbar to review the series and select an image to be used for calibration.

NOTE ***You can change the calibration image at any time by clicking Change in the control panel and selecting a different image.***



2 Click the **Calibration** task.

3 Click **Sphere** in the **Select calibration method** list.

4 Click a sphere in the image to identify it.



5 To hide or show the sphere contour, select or clear **Hide** in the control panel.



6 To edit the sphere, click **Edit** in the control panel, and do any of the following:
- To move the sphere, drag the center of the sphere to a new position.
- To change the diameter of the sphere, drag the circumference of the sphere.

7 If you are using **Biplane LVA/RVA**: Mark the sphere in both the frontal image and the lateral image.



8 You can delete the calibration at any time and start over by clicking **Delete** in the task panel.

9 When the sphere is defined, select the diameter in the list in the control panel.

If the desired diameter is not available, you can type it directly in the box.



10 To accept the calibration factor, click **Accept and Continue** in the control panel.

10.6.4 End Diastole (ED) Task

You use the **End Diastole** task to select the ED image from the series and to define a contour on the image.

When defining a contour in LVA, you can use either a semi-automatic method or a manual method.

When defining a contour in RVA, you can only use the manual method.

Selecting the ED Image

Before you define the ED contour, you must select a suitable image that shows the ED position.

If the ECG is available, it is displayed with the series to assist you with identifying the ED position.



1 Click **End Diastole** in the tasks panel.



2 Use the navigation toolbar to review the series and select an image that shows the ED position.

Defining the ED Contour Semi-Automatically in LVA

To define a contour semi-automatically in LVA, you place three key points on the selected image.

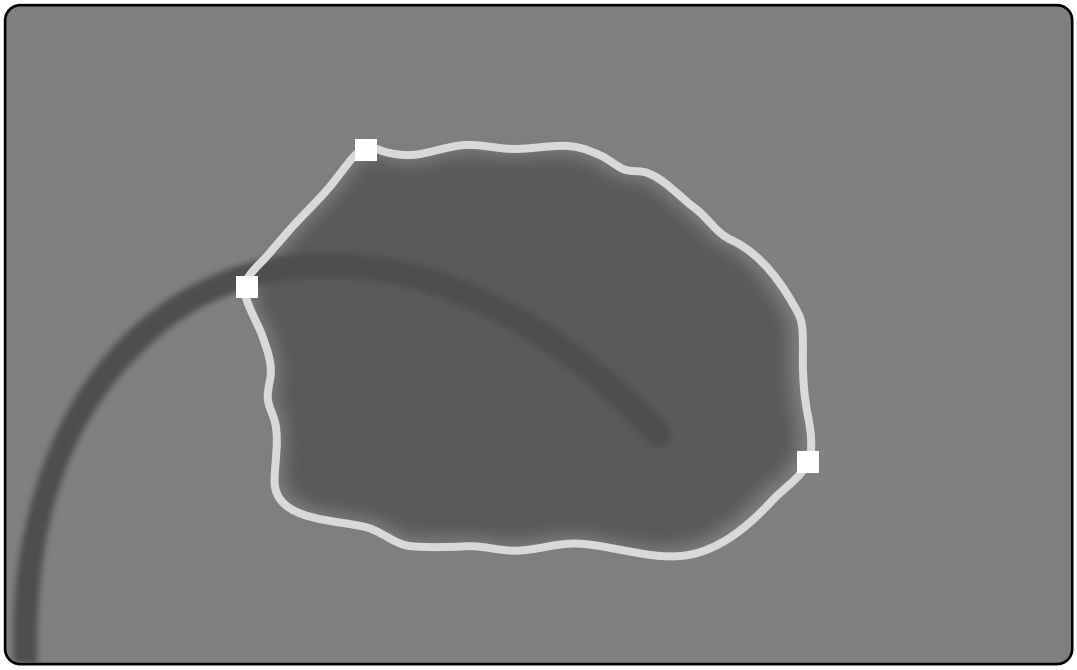

Figure 75 LVA semi-automatic ED contour detection

After placing the points, the contour is displayed and the ED volume (EDV) is displayed in a panel in the lower-right corner.



1 Click **Semi-Automatic** in the control panel.

2 Click on the superior border of the aortic root.

3 Click on the inferior border of the aortic root.

4 Click on the apex.

5 If you are using **Biplane LVA**: Perform this process on both the frontal image and the lateral image so that the contour is detected in each image.



6 If you want to delete the contour and start over, click **Delete** in the control panel.

If the contrast level in the image is insufficient, the contour may not be correctly defined. You can manually edit the contour to correct it: see *Editing the Contour* (page 178).

Defining the ED Contour Manually

To define a contour manually, you place points along the ventricle wall.

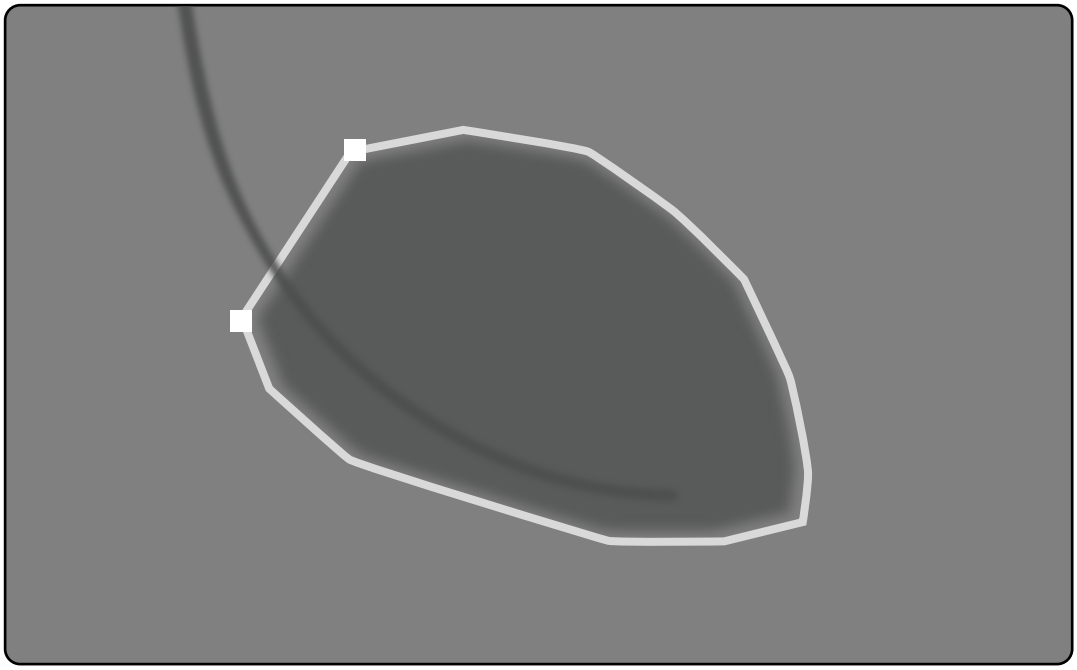

Figure 76 ED manual contour definition



1 Click **Manual** in the control panel.

2 Click on the superior border of the aortic root (LVA) or the pulmonary root (RVA) to start the contour.

3 Click further along the ventricle wall to place the next point of the contour.

4 Continue placing points along the ventricle wall through the cardiac apex until you reach the inferior border of the aortic root (LVA) or the pulmonary root (RVA).

5 Double-click on the inferior border of the aortic root (LVA) or the pulmonary root (RVA) to complete the contour.

6 If you are using **Biplane LVA/RVA**: Perform this process on both the frontal image and the lateral image so that the contour is detected in each image.



7 If you want to delete the contour and start over, click **Delete** in the control panel.

10.6.5 End Systole (ES) Task

You use the **End Systole** task to select the ES image from the series and to define a contour on the image.

When defining a contour in LVA, you can use either a semi-automatic method or a manual method.

When defining a contour in RVA, you can only use the manual method.

Selecting the ES Image

Before you define the ES contour, you must select a suitable image that shows the ES position.

The ECG is displayed with the series to assist you with identifying the ES cardiac phase.

NOTE ***Ensure that the ES image that you select is in the same cardiac cycle as the ED image that you selected in the End Diastole task.***



1 Click the **End Systole** task.



2 Use the navigation toolbar to review the series and select an image that shows the ES cardiac phase.

Defining the ES Contour Semi-Automatically in LVA

To define a contour semi-automatically in LVA, you place three key points on the selected image.

After defining the ES contour, both the ED and ES contours are displayed in each image in the series. The contours are highlighted when you view the image used to define the contour.

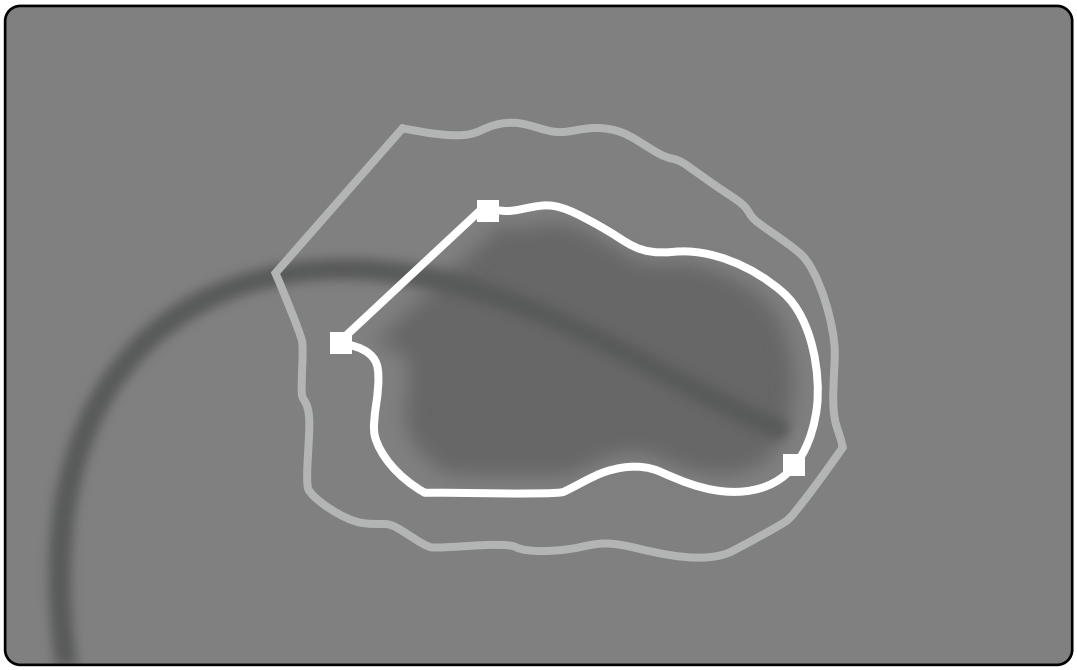

Figure 77 LVA semi-automatic ES contour detection

The main analysis results are displayed in a panel in the lower right corner.



1 Click **Semi-Automatic** in the control panel.

2 Click on the superior border of the aortic root.

3 Click on the inferior border of the aortic root.

4 Click on the apex.

5 If you are using **Biplane LVA**: Perform this process on both the frontal image and the lateral image so that the contour is detected in each image.



6 If you want to delete the contour and start over, click **Delete** in the control panel.



7 Use the navigation toolbar to check the accuracy of the ED and ES contours in each image of the series.

If the contrast level in the image is insufficient, the contour may not be correctly defined. You can manually edit the contour to correct it: see *Editing the Contour* (page 178).

Defining the ES Contour Manually

To define a contour manually, you place points along the ventricle wall.

After defining the ES contour, both the ED and ES contours are displayed in each image in the series. The contours are highlighted when you view the image used to define the contour. The main analysis results are also displayed in a panel in the lower right corner.



Figure 78 ES manual contour definition



1 Click **Manual** in the control panel.

2 Click on the superior border of the aortic root (LVA) or the pulmonary root (RVA) to start the contour.

3 Click further along the ventricle wall to place the next point of the contour.

4 Continue placing points along the ventricle wall through the cardiac apex until you reach the inferior border of the aortic root (LVA) or the pulmonary root (RVA).

5 Double-click on the inferior border of the aortic root (LVA) or the pulmonary root (RVA) to complete the contour.

6 If you are using **Biplane LVA/RVA**: Perform this process on both the frontal image and the lateral image so that the contour is detected in each image.



7 If you want to delete the contour and start over, click **Delete** in the control panel.



8 Use the navigation toolbar to check the accuracy of the ED and ES contours in each image of the series.

10.6.6 Editing the Contour

If the contour is not accurately defined, you can edit it manually.

When editing a contour, you must start and finish the edit on the existing contour. The pointer changes to indicate that you are close enough to the contour.



For additional information, click **Help** in the control panel.



1 Click **Edit** in the control panel.

2 Click the contour at the start point of the section to be edited.

3 Continue placing points along the vessel wall and then double-click on the contour at the end point of the edit.

4 If you are using **Biplane LVA/RVA**: You can edit the contour in either the frontal image or the lateral image as desired, or you can edit the contour in both images.



5 To undo your last edit, click **Undo Last Edit** in the control panel.

10.6.7 Result Task

Ventricle analysis results are displayed in the **Result** task.

This task displays the analysis results and the selected ED image with the ED and ES contours indicated. Any warnings associated with the analysis results are also displayed.

Analysis Results

The ED or ES Volume calculation is based on the contour and the calibration factor, using the calculation model selected in the customization settings.

A first iteration for the volume is calculated with the selected volume method. The volume displayed in the report is corrected with a regression formula.

Indexed values can be calculated when the patient's demographic information is available.

2D-QA has been thoroughly checked and tested. The software is designed to produce a mathematical model as described in the medical literature or medical research. Philips Medical Systems cannot be held responsible in any way for any inaccuracies of any nature resulting from the use of this software. If the calibration guidelines are not followed, the absolute measurements may be inaccurate or unreliable.

Analysis Results	Description	Formula (if applicable)
Ejection Fraction (EF)	The Ejection Fraction is calculated based on the ED Volume and the ES Volume.	EF (%) = (EDV-ESV) ÷ EDV × 100%
Cardiac Output	This item indicates the amount of blood that the heart pumps through the circulatory system in a minute. The Cardiac Output is calculated as the Stroke Volume times the heart rate in Beats Per Minute.	Cardiac Output (l/min) = Stroke Volume ÷ 1000 × BPM
Cardiac Index	The Cardiac Index is the Cardiac Output indexed with Body Surface Area	Cardiac Index (l/min/m^2) = Cardiac Output ÷ BSA

Analysis Results	Description	Formula (if applicable)
Heart Rate (BPM)	The Heart Rate is indicated in Beats Per Minute.	
Body Surface Area (BSA)	Body Surface Area is calculated from the patient's height and weight. BSA can be used to generate indexed results.	
Index Method	The index method used to calculate indexed results.	
Volume Method	The selected volume method.	
ED Volume Regression	The formula used with the volume method to calculate the ED volume.	
ES Volume Regression	The formula used with the volume method to calculate the ES volume.	
Contour Correction	Indicates whether contours were manually corrected during analysis.	
Calibration Object	The calibration method used and the size of the calibration object.	
Calibration Factor	The calibration factor calculated by the system using the inputs in the Calibration task.	
Series	The series number of the series used for analysis.	
ED Image	The image number of the image used as the selected ED image.	
ES Image	The image number of the image used as the selected ES image.	
Projection (Frontal/Lateral for biplane systems)	The projection used during acquistion (RAO/LAO).	
ED Volume (EDV)	The ED volume is calculated from using the volume method and the ED regression method. The Indexed ED Volume is displayed if the patient's demographics are available.	
ES Volume (ESV)	The ES volume is calculated from using the volume method and the ES regression method. The Indexed ES Volume is displayed if the patient's demographics are available.	
Stroke Volume (SV)	The Stroke Volume is calculated as the difference of the ED Volume and the ES Volume. The Indexed StrokeVolume is displayed if the patient's demographics are available.	SV (ml) = EDV - ESV Indexed SV (ml/m^2) = SV ÷ BSA

Setting the Patient Demographics

Some analysis results depend on correctly defined patient demographics, such as the patient's height, weight, and heart rate.

The patient's height and weight allows the Body Surface Area (BSA) to be calculated, which in turn allows indexed analysis results to be calculated. When available, the patient's height and weight are automatically retrieved from the patient database, otherwise you can enter them manually.

The patient's heart rate allows the Cardiac Output and the Cardiac Index to be calculated. The patient's heart rate is automatically entered if this information is available in the patient database, or you can enter the information manually.

You can edit the acquisition patient's demographics using the following procedure.

1 In the control panel, click **Edit Patient Demographics**.

2 If the patient's height and weight information is not displayed, or if it is incorrect, enter the correct information.

3 Enter the patient's heart rate.

4 Click **OK** to close the dialog box and return to the **Result** task.

Volume Methods

Volume Methods: Area Length method

The Area Length method is based on a model of a three-dimensional ellipsoid that is symmetric around its long axis. The resulting volume is corrected with an appropriate regression formula.

Volume Methods: Simpson method

The Simpson method, or slice summation method, is based on a set of circular slices of equal thickness perpendicular to the long axis. The resulting volume is corrected with an appropriate regression formula.

Regression Formulas

The volume calculated from a two-dimensional image has to be corrected to be used as a representation of the three dimensional left ventricle volume.

CAUTION

A standard regression formula is used during analysis. This can be changed in the customization settings. However, analysis results may not be accurate if you choose to use a non-standard regression formula that has not been clinically validated.

NOTE ***The results of the analysis are heavily influenced by the used regression formula, therefore care should be taken when selecting these factors.***

NOTE ***For standardization, it is recommended to use the same predefined method and regression formulas throughout the department.***

Predefined Regression Formula

Different volume correction formulas are defined to correct the ED and ES Volumes. The correction formulas are defined in the customization screens and depend on the volume calculation method selected (for both monoplane and biplane).

User Defined Regression Formula

The calculation of corrected volumes is as follows (for both monoplane and biplane):

- EDV_{corr} = [user defined factor] * EDV_{calc} + [user defined constant]
- ESV_{corr} = [user defined factor] * ESV_{calc} + [user defined constant]

You are free to define optimal formulas to correct the ED and ES volumes. User-defined factors can be different for the Area Length method or the Simpson method.

If you are only interested in the percentage EF, this can be obtained by skipping the calibration procedure.

The formula that is used for the results in the report is indicated in the report.

Wall Motion Results

Wall Motion results are not displayed by default. To include Wall Motion results in the results page, select the Wall Motion options in the control panel:

- Slager Wall Motion
- Centerline Wall Motion

Slager Wall Motion Results (LVA only)

Slager Wall Motion results are calculated for LVA only. The result page includes an image showing a representation of the Slager wall motion model, and graphs showing color-coded information concerning the contribution to overall EF from each area of the heart wall.

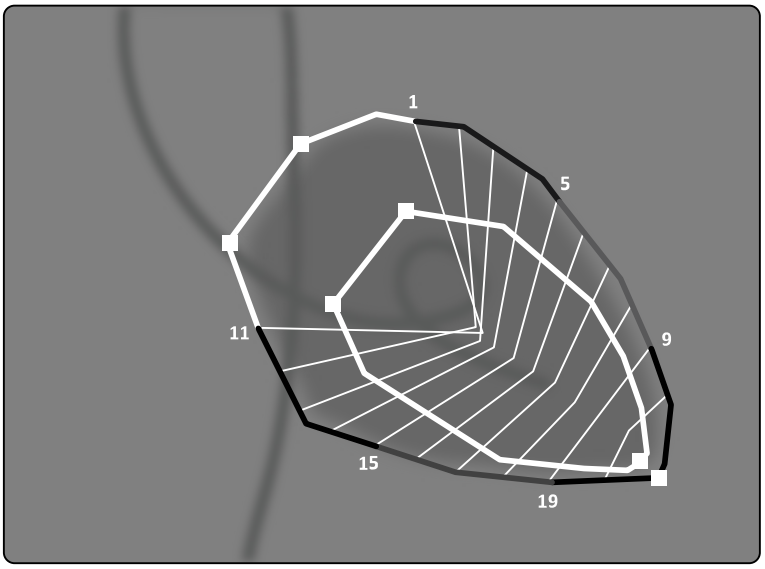

Figure 79 Slager Wall Motion

The Slager Wall Motion method is based on a contraction model and is described in medical literature:

- Slager, C.J., Hooghoudt, T.E.H., et al., “Quantitative assessment of regional left ventricular motion using endocardial landmarks”
- Slager, D.J., Hooghoudt, T.E.H., et al., “Left ventricular contour segmentation from anatomical landmark trajectories and its application to wall motion analysis”

The method is used to describe the displacement between the end diastole and end systole of particular points on the left ventricular wall. The calculations are based on images in standard RAO 30-degree projection, which is also required for the volume calculation utilized.

The left side of the results page shows a composite graph of CREF (Regional Contribution to global Ejection Fraction) values for the 20 segments. CREF values are derived from systolic wall displacement data and left ventricular long-axis shortening. The individual anterior and posterior CREF values of the patient are superimposed and connected by straight lines.

To compare the quantitative results with those provided by the usual visual interpretation, the left ventricular boundary is divided into 5 anatomical regions, denoted Anterobasal, Anterolateral, Apical, Diaphragmatic, and Posterobasal. The segments are assigned to these regions and the CREF values for the regions are plotted as well.

In LVA results, the gray band represents the wall motion parameters for a normal patient population, collected by the Thorax Center, Erasmus University and the University Hospital Dijkzigt, Rotterdam, The Netherlands. The gray band shows the average normal value ±2 standard deviations.

The left side of the results page shows the ED image chosen for left ventricular (EF) analysis with the contours accepted during the analysis. Left ventricular segmental wall motion is computed along 20 straight lines, calculated from a mathematical expression derived from anatomical landmark trajectories in normal patients.

The 20 lines result from 20 well-defined ED contour points or segments, 10 anterior and 10 posterior. The point or segment numbers are plotted along the contour. A center of contraction is defined for each pair of 2 opposite ED contour points.

Centerline Wall Motion Results (LVA / RVA)

Centerline Wall Motion results can be displayed for both LVA and RVA. The result page includes an image showing a representation of the detected wall motion, a table showing kinetic parts, and graphs showing normalized motion and standard deviation.

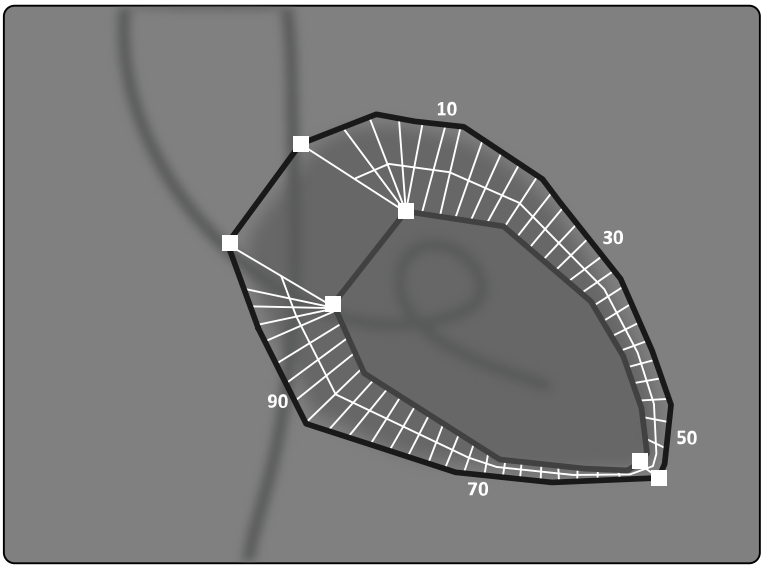

Figure 80 Centerline Wall Motion

The Centerline Wall Motion method is described in medical literature: Sheehan, F.H. “Advantages and applications of the centerline method for characterizing regional ventricular function”.

The Centerline Wall Motion method describes the displacement between the ED and ES of particular points on the ventricular wall. The calculations are based on images in standard RAO 30-degree projection, which is also required for the used volume calculation.

Between the ED and ES contours a centerline is defined. 100 Equidistant chords perpendicular to this centerline are defined. Only 50 chords are shown in the graphic display. The chords are defined in such a way that they do not cross each other.

Besides the image with the contours and chords, a table indicates the hyperkinetic parts (more than two standard deviations of normal movement) and the hypokinetic parts (less than minus two standard deviations of normal movement).

Graphs are also displayed, indicating normalized motion and standard deviation based on the lengths of the chords. The vertical axis represents the length, the horizontal axis the location of the measurement points over the ventricular wall.

In LVA results, the gray band represents the wall motion parameters for a normal population. The gray band represents the wall motion parameters for a normal patient population, as described in the above-mentioned article by Sheehan. The gray band shows the average normal value ±2 standard deviations. This is not available in RVA results.

References

Computations in 2D Quantitative Analysis are performed according to methods described in medical literature.

LVA

Author	Article
Sandler, H. and Dodge, H.T	The use of single plane angiocardiograms for the calculation of left ventricular volume in man. American Heart Journal, 75, (3), 1968, pp 325-334.
Folland, E.D. and Parisi, A.F.,	Ventricular volume and function, in: Textbook of two-dimensional echocardiography, Talano, J.V. and Gardin, J.M. (eds), Grune & Stratton (New York), p. 165, 1983.
Reiber, J.H.C., Viddeleer, A.R., Koning, G. et al.	Left ventricular regression equations from single plane cine and digital X-ray ventriculograms revisited, International Journal of Cardiac Imaging, 12: 69-78, 1996.
Brower, P.W., Meester, G.T., Hugenholtz, P.G.	Quantification of ventricular performance: A computer-based system for the analysis of angiographic data, Cath. and Cardiovasc. Diagn., 1, pp. 133-155, 1975.
Brower, P.W. and Meester, G.T.	Quantification of left ventricular function in patients with coronary disease, in: Clinical and research applications of engineering principles, University Park Press (Baltimore), chap. 16, 1979.
McHale, P.A. and Greenfield, J.C.,	Evaluation of several geometric models for estimation of left ventricular circumferential wall stress, Circ. Res, 33, pp. 303-312, 1973.
Yang, S.S., Bentivoglio, L.G., et al.	From cardiac catheterization data to hemodynamic parameters, 3rd edition, F.A. Davis Company (Philadelphia), p. 42, 1988.
Koning, G., Brand, M. van den, Zorn, I., et al.	Usefulness of digital angiography in the assessment of left ventricular ejection fraction, Cath. and Cardiovasc. Diagn., 21, pp. 185-194, 1990.
Kennedy, J.W., Trenholme, S.E. and Kasser, I.S.	Left ventricular volume and mass from single-plane cineangiocardiograms. A comparison of anteroposterior and right anterior oblique methods. American Heart Journal, 1970, p 348.
Lange, P.E., Onnasch, et al.,	Angiocardiographic left ventricular volume determination. Accuracy as determined from human casts and clinical application. Eur. J. Cardiology, 1978, vol. 8.
Dodge, H.T., Sandler H. et al.	The use of biplane angiography for measurement of left ventricular volume in man. Am.Heart, 1960, vol.60.

RVA

Author	Article
Arcilla RA, Tsai P, Thilenius O, Ranniger K.	Angiographic method for volume estimation of right and left ventricles. Chest 1971; 60(5): 446–454.
Boak JG, Bove AA, Kreulen T, Spann JF.	A geometric basis for calculation of right ventricular volume in man. Cathet Cardiovasc Diagn 1977; 3(3): 217–230.
Ferlinz J.	Measurements of right ventricular volumes in man from single plane cineangiograms. A comparison to the biplane approach. Am Heart J 1977; 94(1): 87–90.
Gentzler RD, Briselli MF, Gault JH.	Angiographic estimation of right ventricular volume in man. Circulation 1974; 50(2): 324–330.
Krebs W, Erbel R, Schweizer P, et al.	Right ventricular volume determination by two-dimensional echocardiography and radiography in model hearts using a subtraction method. Z Kardiol 1982; 71(6): 413–420.
Lange PE, Onnasch D, Farr FL, Malerczyk V, Heintzen PH.	Analysis of left and right ventricular size and shape, as determined from human casts. description of the method and its validation. Eur J Cardiol 1978; 8(4–5): 431–448.
Thilenius OG, Arcilla RA.	Angiographic right and left ventricular volume determination in normal infants and children. Pediatr Res 1974; 8(2): 67–74.
Grothues F, Moon JC, Bellenger NG, Smith GS, Klein HU, Pennell DJ.	Interstudy reproducibility of right ventricular volumes, function, and mass with cardiovascular magnetic resonance. Am Heart J 2004; 147(2): 218–223.
Helbing WA, Rebergen SA, Maliepaard C, et al.	Quantification of right ventricular function with magnetic resonance imaging in children with normal hearts and with congenital heart disease. Am Heart J 1995; 130(4): 828–837.
Rominger MB, Bachmann GF, Pabst W, Rau WS.	Right ventricular volumes and ejection fraction with fast cine mr imaging in breath-hold technique: applicability, normal values from 52 volunteers, and evaluation of 325 adult cardiac patients. J Magn Reson Imaging 1999; 10(6): 908–918.
Graham TP Jr, Jarmakani JM, Atwood GF, Canent RV Jr.	Right ventricular volume determinations in children. normal values and observations with volume or pressure overload. Circulation 1973; 47(1): 144–153.

Author	Article
Lange PE, Onnasch D, Farr FL, Heintzen PH.	Angiocardiographic right ventricular volume determination. accuracy, as determined from human casts, and clinical application. Eur J Cardiol 1978; 8(4–5): 477–501.
Shimazaki Y, Kawashima Y, Mori T, Beppu S, Yokota K.	Angiographic volume estimation of right ventricle. re-evaluation of the previous methods. Chest 1980; 77(3): 390–395.
Ferlinz J, Gorlin R, Cohn PF, Herman MV.	Right Ventricular performance in patients with coronary artery disease. Circulation 1975; 52(4): 608–615.
Helbing WA, Niezen RA, Le Cessie S, Geest RJvan der, Ottenkamp J, Roos Ade.	Right ventricular diastolic function in children with pulmonary regurgitation after repair of tetralogy of fallot: volumetric evaluation by magnetic resonance velocity mapping. J Am Coll Cardiol 1996; 28(7): 1827–1835.
Ferlinz J.	Angiographic assessment of right ventricular volumes and ejection fraction. Cathet Cardiovasc Diagn 1976; 2(1): 5–14.
Lange PE, Onnasch D, Beurich HW, Heintzen PH.	Angiographic volume determination of the right ventricle. Ann Radiol (Paris) 1978; 21(4–5): 369–374.
Beier J, Wellnhofer E, Oswald H, Fleck E.	Accuracy and precision of angiographic volumetry methods for left and right ventricle. Int J Cardiol 1996; 53(2): 179–188.
Dubel HP, Romaniuk P, Tschapek A.	Investigation of human right ventricular cast specimens. Cardiovasc Intervent Radiol 1982; 5(6): 296–303.
Wellnhofer E, Krulls-Munch J, Sauer U, Oswald H, Fleck E	A New Methodologic approach for determining right ventricular volumes from transesophageal echocardiography. Z Kardiol 1994; 83(7): 482–494.

10.7 Managing Results

You can review, save, or delete results pages in the **Result** task.

If results pages of the currently selected analysis application have already been saved for the current study, they are displayed in the **Existing result pages** list in the control panel.

10.7.1 Saving a Result Page

When you save a result page, it is stored in the patient database with the current study.



1 When the analysis is complete, click the **Result** task.



2 Click **Save Result**.

10.7.2 Reviewing a Saved Result Page

You can review a saved result page in the **Result** task.

Only results pages for the currently selected analysis application can be reviewed.

In the **Existing result pages** pane, scroll through the saved result pages and select the desired page.

10.7.3 Deleting a Result Page

You can delete a previously saved result page in the **Result** task.

In the **Existing result pages** list, scroll through the saved result pages, right-click the desired page and click **Delete**.

10.8 2D-QA Settings

The following sections provide information about customizing the 2D-QA according to your preferred workflow.

10.8.1 Changing Default Calibration Settings

NOTE ***Changes that any user makes to the customization settings are applied for all users.***



1 On the **System** menu, click **Customization**.



2 On the left side of the screen, in the **Measurements and Analysis** section, click **Calibration and Vessel Analysis**.

3 Change the following settings, as desired:

Item	Settings	Notes
Default Manual Calibration	**Catheter**	This setting determines which manual calibration method is selected by default if automatic calibration is not available.
	Distance	
	Sphere	
Predefined catheter size values (French)	To change a predefined size, select the item and enter a new value.	You cannot enter a catheter size less than 4 French.
	To add an additional size, enter the value in the box.	
	To remove an item, select the value and press BACKSPACE.	
Predefined distance values (mm)	To change a predefined distance, select the item and enter a new value.	
	To add an additional distance, enter the value in the box.	
	To remove an item, select the value and press BACKSPACE.	
Predefined sphere size values (mm)	To change a predefined size, select the item and enter a new value.	
	To add an additional size, enter the value in the box.	
	To remove an item, select the value and press BACKSPACE.	

NOTE ***In the Calibration and Vessel Analysis panel, you can also change the default curve settings. For details, see Changing QCA / QVA Default Curve Display Settings (page 186).***



4 To undo any changes that you have made in the **Calibration and Vessel Analysis** panel, click **Undo Changes**.



5 Alternatively, to restore the system settings to default values, click **Reset Default**.

Item	Default Settings	Input Range
Default Manual Calibration	Catheter	Not applicable
Predefined catheter size values (French)	4, 4.5, 5, 5.5, 6, 6.5, 7	4 French to 12 French
Predefined distance values (mm)	10, 15, 35, 50	10 mm to 100 mm
Predefined sphere size values (mm)	45, 50, 55	10 mm to 100 mm



6 Click **Save** to save your changes.

10.8.2 Changing QCA / QVA Default Curve Display Settings



1 On the **System** menu, click **Customization**.



2 On the left side of the screen, in the **Measurements and Analysis** section, click **Calibration and Vessel Analysis**.

3 Change the following setting, as desired:

Item	Settings
Default Curve Display	**Diameter**
	Diameter & Area



4 Click **Save** to save your changes.

10.8.3 Changing LVA Default Settings



1 On the **System** menu, click **Customization**.



2 On the left side of the screen, in the **Measurements and Analysis** section, click **Left Ventricle Analysis**.

3 Change the following settings, as desired:

Item	Settings	Notes
Default Index method	**BSA**	The cardiac output is always indexed to BSA, irrespective of the selected index method.
	BSA^1.219	
	Weight	
Monoplane Volume Method List	**Area Length**	
	Simpson	
Monoplane Regression Formulas	**Area Length** RAO30, EDV, ESV = 0.783, Vcalc = –3.759, Adults/Children RAO30, EDV, ESV = 0.810, Vcalc = 1.9, Adults/Children RAO30, EDV, ESV = 0.822, Vcalc = 0, Adults/Children **Simpson** RAO30, EDV, ESV = 0.737, Vcalc = –4.649, Adults/Children You can select a predefined regression formula, or you can enter a user-defined formula in the boxes provided.	
Biplane Volume Method List	**Area Length**	
Biplane Regression Formulas	RAO30/LAO60, EDV, ESV = 0.989, Vcalc = –8.1, Adults/Children You can select a predefined regression formula, or you can enter a user-defined formula in the boxes provided.	
Rotation Range	Enter a range in the boxes in which warnings are suppressed.	
Angulation Range	Enter a range in the boxes in which warnings are suppressed.	



4 To undo any changes that you have made in the **Left Ventricle Analysis** panel, click **Undo Changes**.



5 Alternatively, to restore the system settings to default values, click **Reset Default**.

Item	Default Settings	Input Range
Default index method	BSA	Not applicable

Item	Default Settings	Input Range
LVA Monoplane Volume Methods List	Area Length	Not applicable
LVA Monoplane Regression formula	EDV, ESV = 0.783, Vcalc = –3.759	Not applicable
LVA Biplane Volume Methods List	Area Length	Not applicable
LVA Biplane Regression formula	EDV, ESV = 0.989, Vcalc = –8.1	Not applicable
LVA Rotation/Angulation Range	–10 degrees to +10 degrees	–20 degrees to +20 degrees



6 Click **Save** to save your changes.

10.8.4 Changing RVA Default Settings



1 On the **System** menu, click **Customization**.



2 On the left side of the screen, in the **Measurements and Analysis** section, click **Right Ventricle Analysis**.

3 Change the following settings, as desired:

Item	Settings
Default Index method	**BSA**
	BSA^1.219
	Weight
Age Threshold	Enter a value in the box to specify the child/adult age threshold.
Monoplane Volume Method List	**Pyramid**
Monoplane Regression Formulas	RAO30, EDV, ESV = 0.898, Vcalc = 3.862, Adults You can select a predefined regression formula, or you can enter a user-defined formula in the boxes provided.
Biplane Volume Method List	**Area Length**
	Simpson
Biplane Regression Formulas	**Area Length** AP/Lateral, EDV, ESV = 0.779, Vcalc = –1.807, Adults RAO30/LAO60, EDV, ESV = 0.79, Vcalc = 0.238, Adults RAO45/LAO45, EDV, ESV = 0.737, Vcalc = –1.435, Adults RAO60/LAO30, EDV, ESV = 0.749, Vcalc = 0.836, Adults Any projection, EDV, ESV = 0.76, Vcalc = –0.2, Adults AP/Lateral, EDV, ESV = 0.898, Vcalc = 2.8, Children AP/Lateral, EDV, ESV = 0.68, Vcalc = 0, Children **Simpson** AP/Lateral, EDV, ESV = 0.649, Vcalc = 0, Children You can select a predefined regression formula, or you can enter a user-defined formula in the boxes provided.
Rotation Range	Enter a range in the boxes in which warnings are suppressed.
Angulation Range	Enter a range in the boxes in which warnings are suppressed.



4 To undo any changes that you have made in the **Right Ventricle Analysis** panel, click **Undo Changes**.



5 Alternatively, to restore the system settings to default values, click **Reset Default**.

Item	Default Settings	Input Range
Default index method	BSA	Not applicable
RVA Age Threshold	16 years	1 year to 120 years
RVA Monoplane Volume Methods List	Pyramid only - not customizable	Not applicable
RVA Monoplane Regression formula	EDV, ESV = 0.898, Vcalc = 3.862	Not applicable
RVA Biplane Volume Methods List	Area Length	Not applicable
RVA Biplane Regression formula	EDV, ESV = 0.779, Vcalc = –1.807	Not applicable
RVA Rotation/Angulation Range	–10 degrees to +10 degrees	–20 degrees to +20 degrees



6 Click **Save** to save your changes.

11 Using Other Equipment

The system is designed for use with other optional and integrated systems and equipment.

These Instructions for Use provide basic information on how the system interfaces with other equipment. For information on how to use the other equipment, you should refer to the Instructions for Use supplied with the equipment.

11.1 Accessories

This section provides information about accessories that are available with the system.

11.1.1 Additional Table Accessory Rail

You can use the additional table accessory rail to position modules and accessories closer to the head of the tabletop. The maximum load on the additional table accessory rail must not exceed 100 N downwards (limited by the table), and a maximum torque of 40 Nm downwards and 20 Nm upwards (limited by the table).

The additional table accessory rail is available as EU and US versions (the US version has a black anodized finish). The modules that are designed for the EU version do not fit correctly on the US version; the modules may become detached from the rail.

1 Open the clamps on the additional table accessory rail, position the rail on the edge of the tabletop, and then close the clamps to secure the rail.

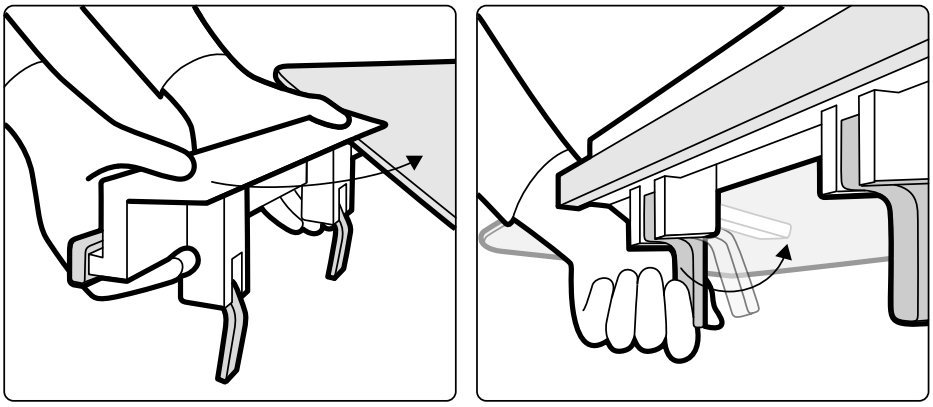

Figure 81 Additional table accessory rail

2 Attach modules to the additional table accessory rail.

The additional table accessory rail can be used for 2 modules, or 1 module and surgical accessories. The maximum weight must not exceed 10 kg. If you attach a surgical accessory on the additional table accessory rail, which will be placed over the table width, the maximum force may not exceed 4 kg over the middle of the table.

3 Ensure that all cables are fitted to the cable supports.

4 To remove the additional table accessory rail, do the following:

a Remove the modules and attach them to the standard table accessory rail.

b Remove the additional table accessory rail from the tabletop.

11.1.2 Arm Supports

The following arm supports are available for use with the system:

- Set of elbow supports: Used for patient comfort and to prevent the patient's arms from hanging over the side of the table.
- Arm support board: Used to support the patient's arm during brachio-cephalic catheterization procedures.
- Shoulder support board. Used to support both arms during brachio-cephalic catheterization procedures.
- Height-adjustable arm support: Used to manage blood flow during venous digitial subtraction angiography (DSA).

11.1.3 Using the Elbow Support

1 Position the patient on the table before using the elbow support.

2 Slide the elbow support under the patient between the tabletop and the mattress.

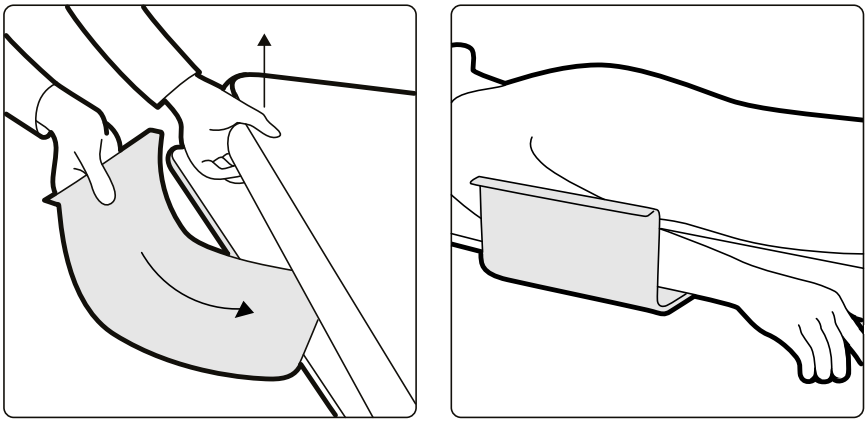

Figure 82 Positioning the elbow support

3 Position the patient's arm on the elbow support.

11.1.4 Using the Arm Support Board

1 Position the patient on the table before using the arm support board.

2 Attach the foam pad to the arm support board ensuring that the arm support board is passed through the loop of the pad.

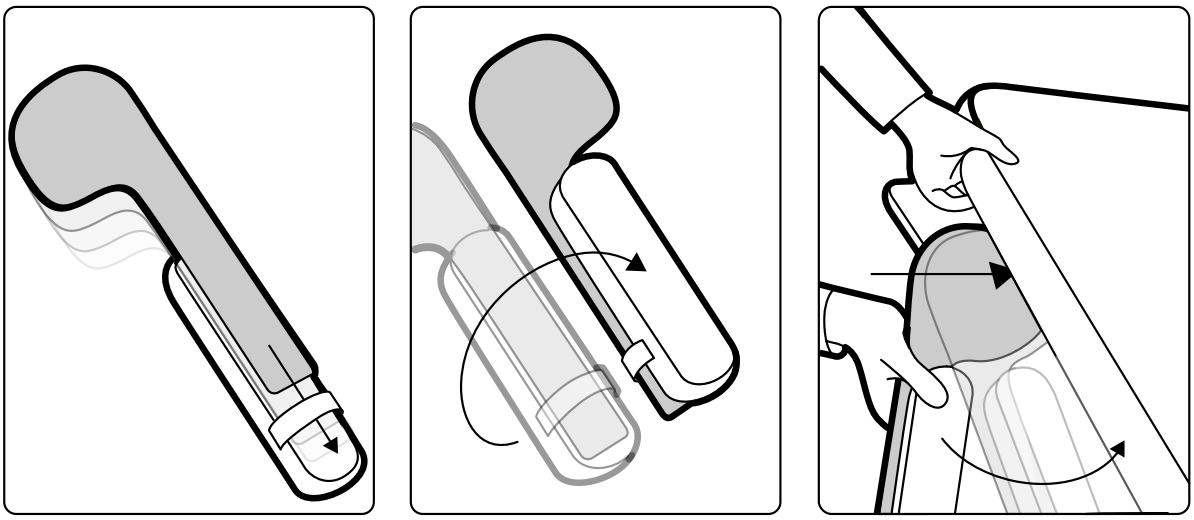

Figure 83 Attaching the foam pad to the arm support board

3 With the foam pad facing upward, slide the arm support board under the patient's shoulder between the tabletop and the mattress.

4 Position the patient's arm on the arm support board.

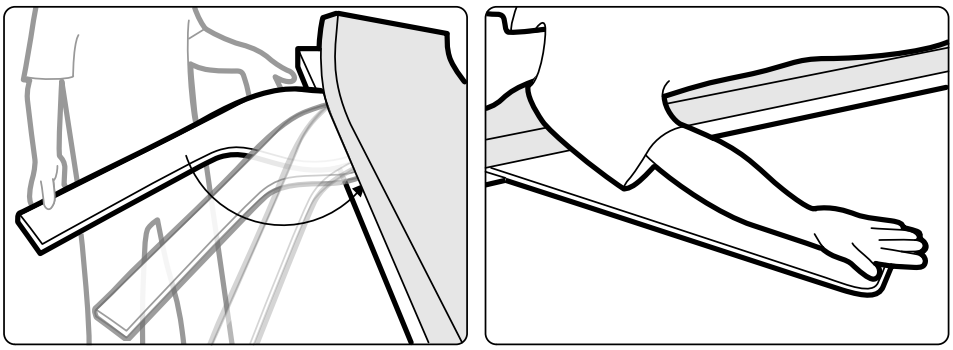

Figure 84 Positioning the patient's arm

11.1.5 Using the Height-Adjustable Arm Support

NOTE ***The height-adjustable arm support cannot be used for X-ray procedures on the arm. In such cases, use the arm support board. For more information, see Using the Arm Support Board (page 190).***

1 Position the patient on the table.

For more information, see *Positioning the Patient on the Table* (page 54).

2 Fit the tabletop accessory clamp to the tabletop at the desired position, and tighten the locking lever.

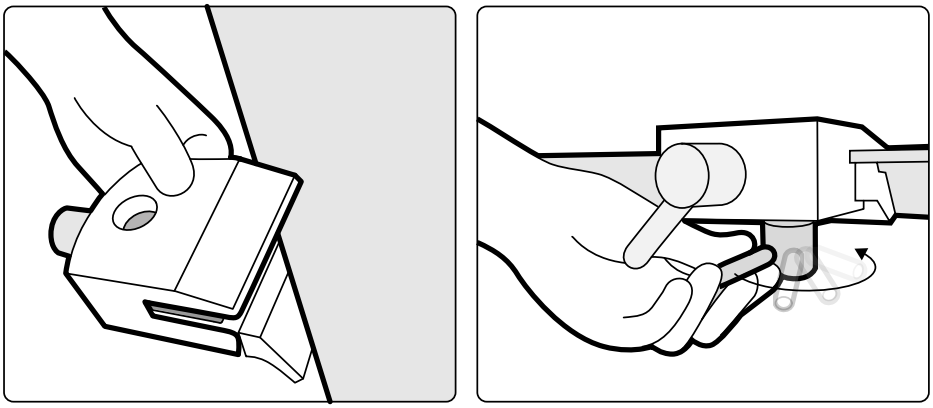

Figure 85 Fitting the tabletop accessory clamp to the tabletop

3 Do one of the following:

- Attach the arm support extension to the arm support, and adjust the length of the extension as necessary.

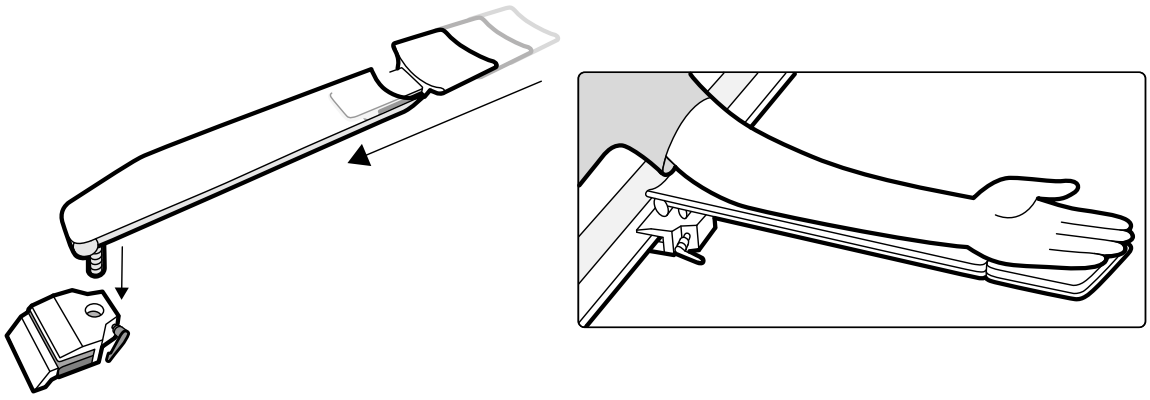

Figure 86 Using the arm support extension

- Attach the arm support handgrip to the arm support, and adjust the position of the handgrip as necessary.

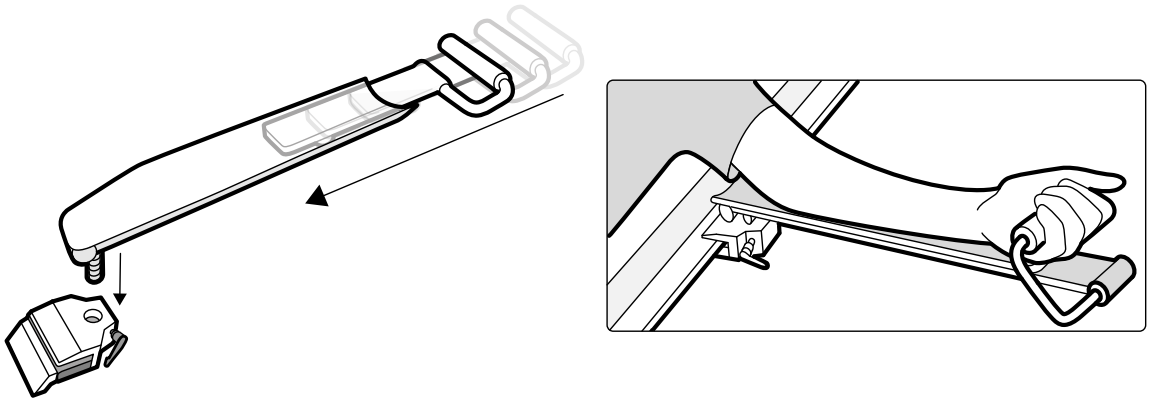

Figure 87 Using the arm support handgrip

4 Fit the arm support into the accessory clamp, and tighten the locking lever.

5 Cover the arm support with a biocompatible material, such as tissue paper or a sheet, to avoid direct contact with the patient.

6 Set the angle of the arm support and position the patient's arm on the support.

11.1.6 Using the Shoulder Support Board

1 Slide the shoulder support board between the mattress and the tabletop, and under the patients' shoulder.

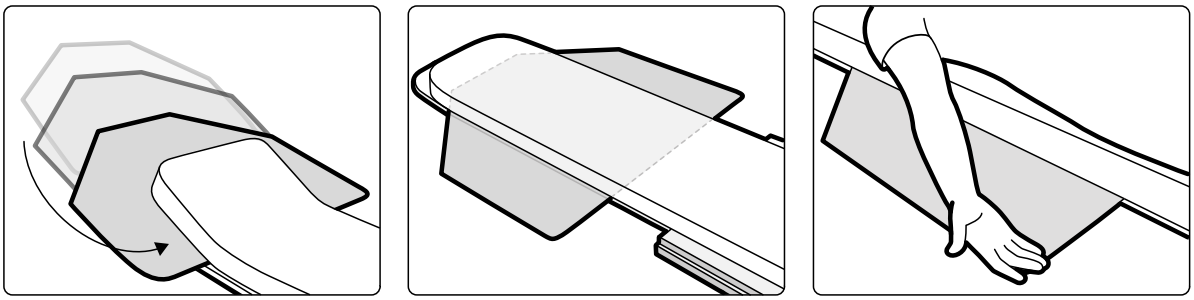

Figure 88 Using the shoulder support board

2 Position the patient's arm on the support board.

11.1.7 Drip Stand

You can attach the drip stand to the table accessory rail to hang bags of fluid. The maximum load for the drip stand is 2 kg on each hook.

1 Attach a rail accessory clamp to the accessory rail and fit the drip stand into the rail accessory clamp.

2 Tighten the clamp to secure the drip stand.

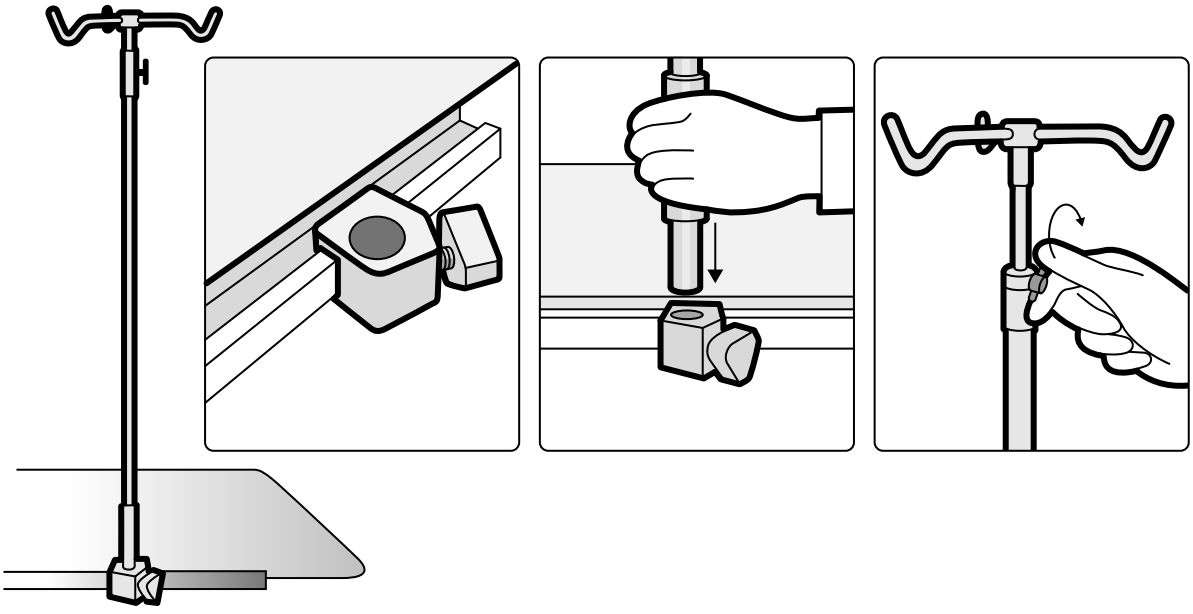

Figure 89 Fitting the drip stand

3 To adjust the height of the drip stand, loosen the height adjustment clamp, adjust the height of the drip stand, and then tighten the clamp.

11.1.8 Cerebral Filter

The cerebral filter improves the overall image quality during neuro-angiographic procedures.

1 To fit the cerebral filter, push the cerebral filter into the rim of the X-ray tube housing.

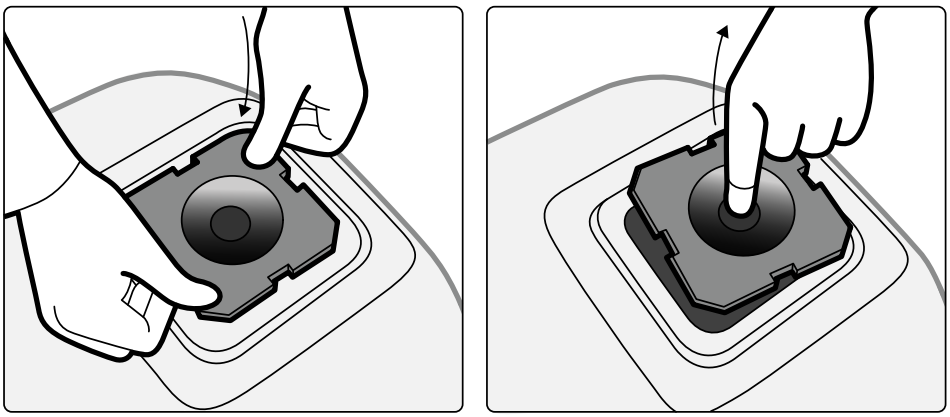

Figure 90 Fitting the cerebral filter

2 To remove the cerebral filter, inserting your finger into the filter hole and lift the filter out of the rim of the X-ray tube housing.

11.1.9 Peripheral X-ray Filters

Peripheral X-ray filters minimize patient movements during lower peripheral angiography procedures.

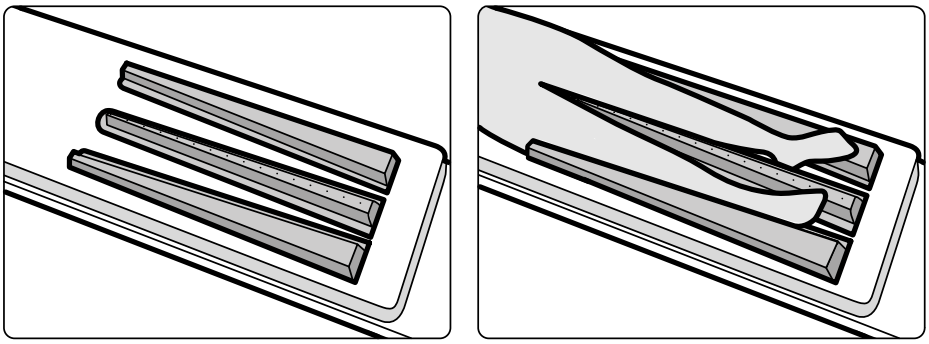

Figure 91 Peripheral X-ray filters

The center filter is marked to facilitate measurements in acquired images. The marks are spaced approximately 5 cm (2 inches) apart.

1 Position the central peripheral filter carefully between the patient's legs, with the wide end at the patient's feet and the narrow end as high up as possible.

WARNING
The peripheral X-ray filters contain copper. You must use a sheet or cover to avoid direct contact with the patient's skin.

2 Immobilize the patient's legs at knee and ankle using straps.

For patients with genu varum (O), the patient's knees should be slightly lifted and supported underneath, and then strapped closely together.

For patients with genu valgum (X), the patient's knees should be slightly lifted and supported underneath, and then the patient's ankles should be strapped closely together.

3 Position the side filters as close as possible to the sides of the patient's legs, with the wide end at the patient's feet.

4 Fit the filters to the shape of the patient's legs to avoid gaps between the filters and the legs.

11.1.10 Head Support

The head support improves patient comfort and minimizes head movements during a procedure.

1 Place the base of the head support at the head end of the table with the rectangular side towards the mattress, but not on the mattress.

2 Place the shaped head support on the head support base and align the markers.

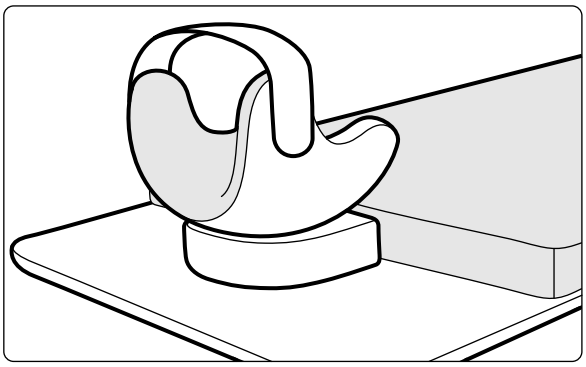

Figure 92 Positioning the head support

3 Position the patient so that the patient's head lies comfortably in the head support.

4 For extra support, attach the head band.

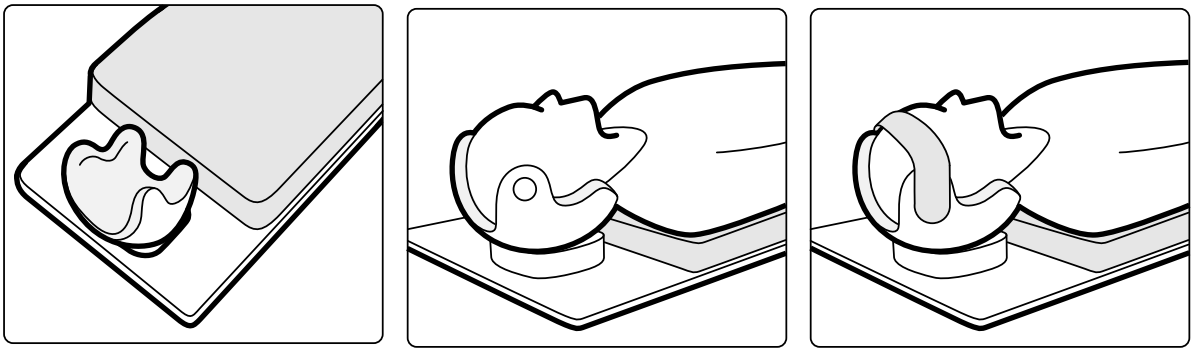

Figure 93 Positioning the patient in the head support

You can use the neuro wedge with the head support. For more information about the neuro wedge, see *Neuro Wedge* (page 196).

11.1.11 Mattress

The mattress provides comfort for the patient and spreads the weight of the patient evenly.

There are three types of mattress available:
- Standard
- Cardio
- Neuro

NOTE ***The mattress does not contain latex.***

Before positioning the patient on the mattress, open the air plug to allow the mattress to expand and contract properly with the weight of the patient.

Close the air plug while cleaning the mattress. When the mattress is not in use, the air plug can be pushed all the way in to the mattress.

11.1.12 Neuro Wedge

You can use the neuro wedge to position the patient's head in the isocenter position during neuro-radiology procedures. The neuro wedge should be used with the head support. For more information about the head support, see *Head Support* (page 195).

1 Slide the tapered end of the neuro wedge under the mattress at the head end of the table so that only the rectangular portion of the wedge is visible.

2 Position the head support on top the rectangular part of the neuro wedge.

3 Position the patient so that the patient's head lies comfortably in the head support.

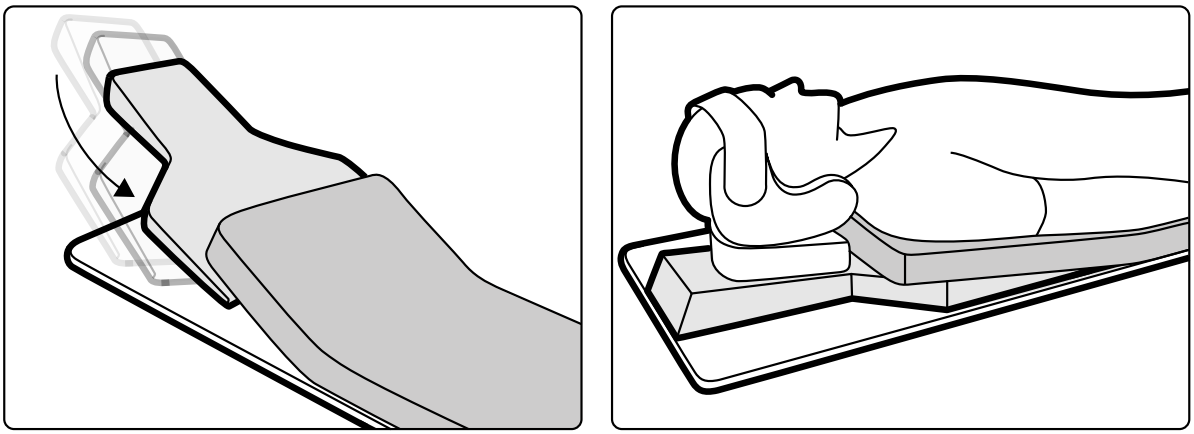

Figure 94 Positioning the neuro wedge

11.1.13 Ratchet Compressor

The ratchet compressor applies moderate compression to the patient and minimizes patient movement. This improves visualization of internal organs.

1 Position the unit on the edge of the table and tighten the attachments underneath the unit.

2 Push the release lever down to release the compression band.

3 Pass the compression band over the patient and back under the table, and then put the end of the band over the compression band roller.

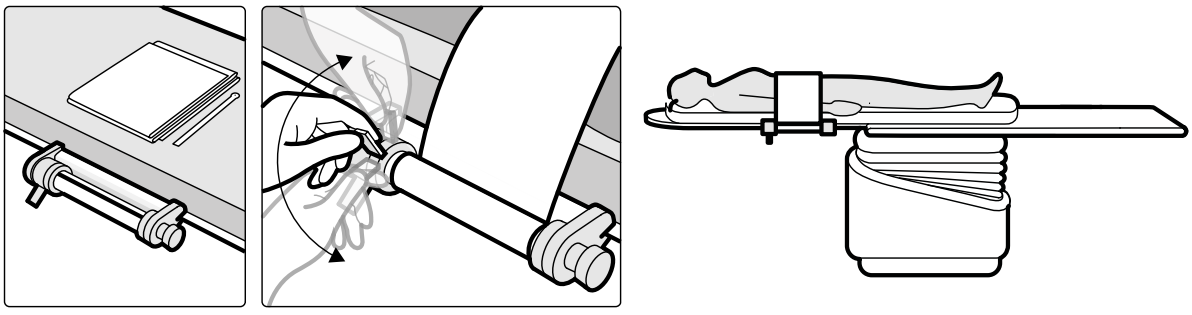

Figure 95 Fitting the compression band

4 Turn the ratchet winder clockwise to increase the compression.

Take care to control the amount of compression.

5 To decrease the compression, push the release lever down and turn the ratchet winder counter-clockwise.

6 To release the compression band when the procedure is finished, do the following:

a Push the release lever down.

b Release the band from the compression band roller.

c Rewind the band by turning the ratchet winder counter-clockwise.

d Remove the unit from the edge of the table.

11.1.14 Accessory Rail Clamps

Accessory rail clamps allow you to attach compatible accessories to the table accessory rail.

1 Slide the clamp on to the accessory rail.

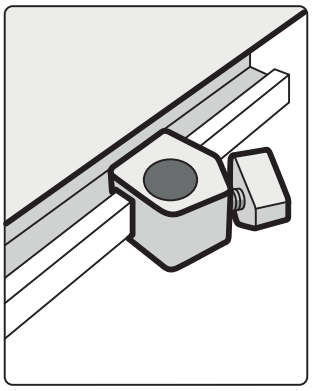

Figure 96 Positioning the clamp on the accessory rail

2 Fit an accessory in the clamp.

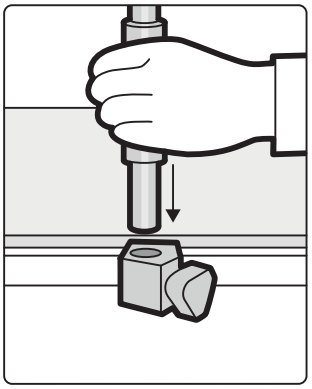

Figure 97 Fitting an accessory in the clamp

3 Turn the knob on the clamp so that the clamp and accessory are firmly attached to the accessory rail.

When a clamp does not have an accessory fitted, it should be removed from the rails.

11.1.15 Handgrip and Clamp Set

The handgrip and clamp set provides safety and comfort for the patient during tilt or cradle movements.

1 Attach a tabletop accessory clamp on each side of the table at the appropriate position.

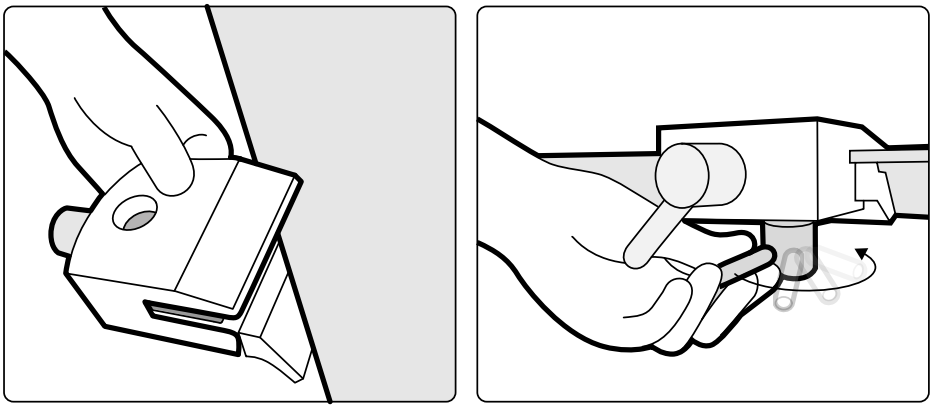

Figure 98 Fitting the tabletop accessory clamp

2 Fit the handgrips in the clamps and tighten the locking levers.

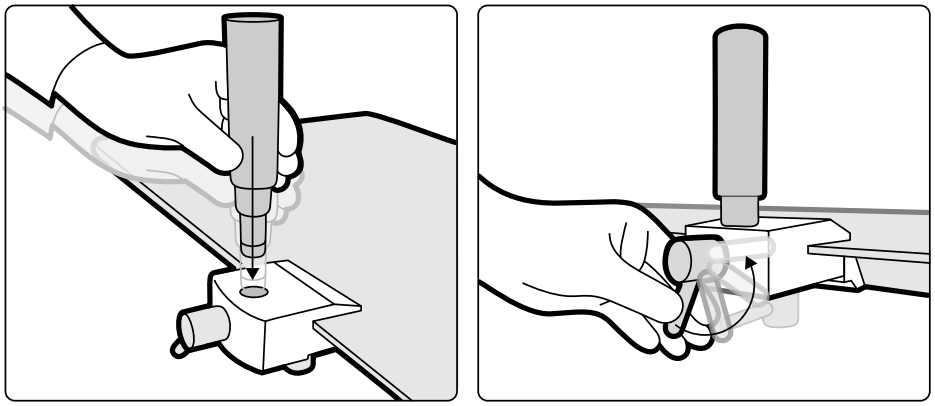

Figure 99 Positioning the handgrips

11.1.16 XperGuide Laser Tool (Option)

The XperGuide laser tool is a positioning aid. It is attached to the patient table for use during percutaneous interventional procedures.

WARNING
The XperGuide laser tool contains a laser with the IEC classification of class 1 laser product. Avoid exposing eyes to the laser at any time.

WARNING
Do not use the laser tool for investigation. The laser tool is for alignment only.

The laser tool marks the needle entry point on the skin, and assists the user holding the needle in the correct position and orientation.

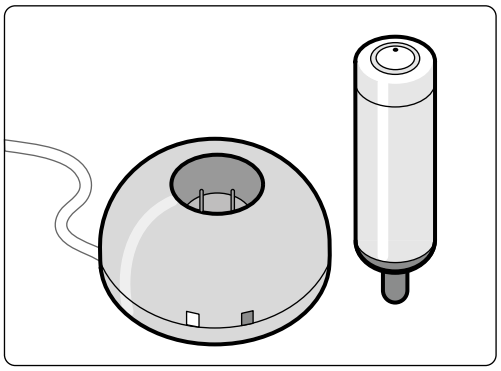

Figure 100 Laser tool and charger

The laser tool is used in the laser tool holder, which is attached to the table using a tabletop accessory clamp.

The laser aperture of the laser tool is indicated with an arrow in the following illustration.



Figure 101 Laser tool laser aperture

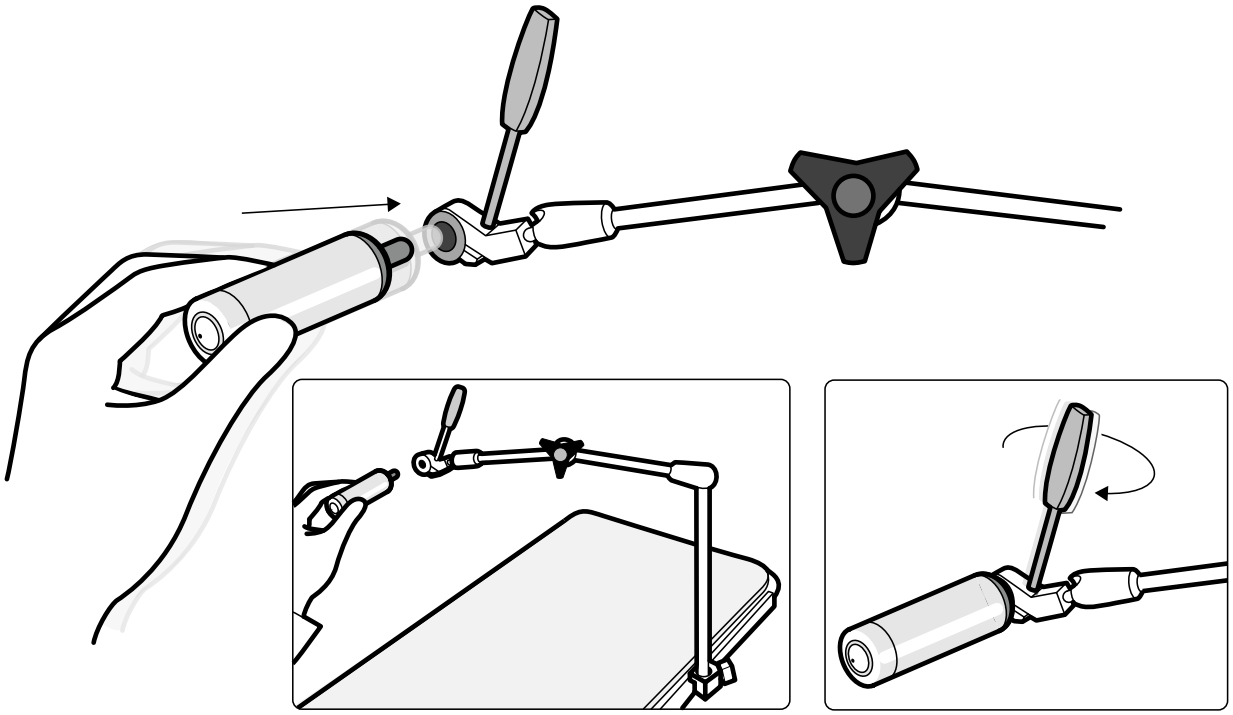

Figure 102 Laser tool holder

Sterile disposable covers are not supplied with the laser tool and must be obtained locally.

Switching the XperGuide Laser Tool On and Off

1 To switch the laser tool on, press the power button on the top of the tool.

When the laser tool is switched on, the indicator light on the button is illuminated.

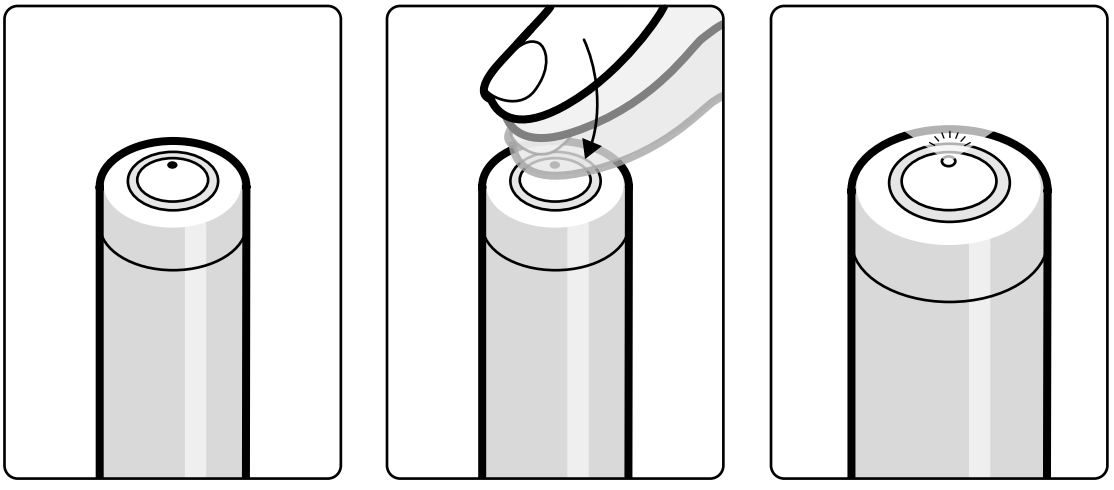

Figure 103 XperGuide laser tool power button

2 To switch the laser tool off, press the power button again.

Charging the XperGuide Laser Tool

Keep the laser tool charger in the control room (out of the patient environment).

1 Connect the laser tool charger to the mains.

When the red indicator light on the laser tool charger is illuminated, the charger is connected to the mains.

2 Insert the laser tool to the charger.

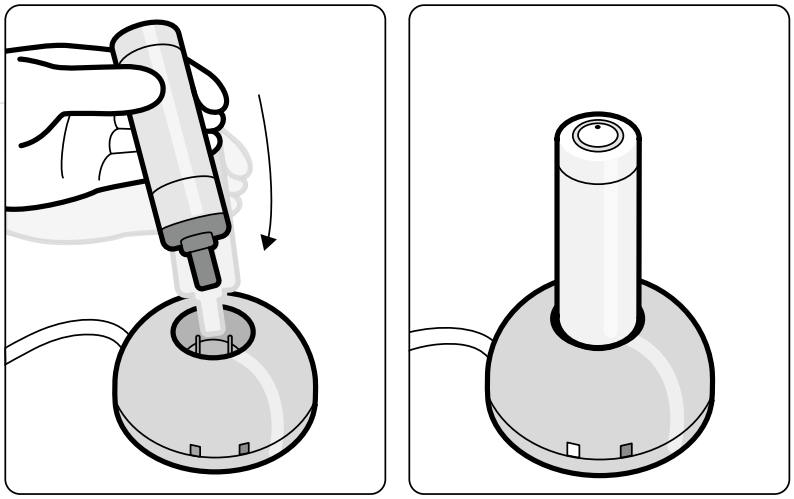

Figure 104 XperGuide Laser Tool Charger

When the green indicator light is illuminated, the laser tool is charging.

When the green indicator light switches off the laser tool is fully charged.

3 Disconnect the laser tool charger from the mains.

4 Recharge the laser tool after each use to ensure the availability of the laser for the next procedure.

11.1.17 Wireless Foot Switch (Option)

The wireless foot switch provides the same functions as the wired foot switch delivered with the X-ray system.

NOTE ***The wireless foot switch generates, uses, and can radiate radio frequency energy and, if not installed and used in accordance with the instruction manual, may cause harmful interference to radio communications.***

There is no guarantee that radio interference will not occur in a particular installation. If this equipment does cause harmful interference to radio or television reception, which can be determined by turning the equipment off and on, contact technical support.

The wireless foot switch must be installed by a qualified service engineer with a Philips installation kit. Contact a Philips representative for details.

NOTE ***The wireless foot switch is not intended for patient contact. It is classified as insulation class II.***

Identification Labels

During installation, the wireless foot switch is paired with the X-ray system, so that the foot switch activates functions only on the matching X-ray system.

A sheet of self-adhesive identification labels is supplied with the wireless foot switch. We recommend that you use these labels to identify the foot switch and the X-ray system.

The sheet of labels provides 6 pairs of printed numbers. Attach one label to the recess in the upper-right corner of the foot switch, and then attach the matching label to a clearly visible location on the X-ray system. Blank labels are also provided, in case you want to use your own identification marks.

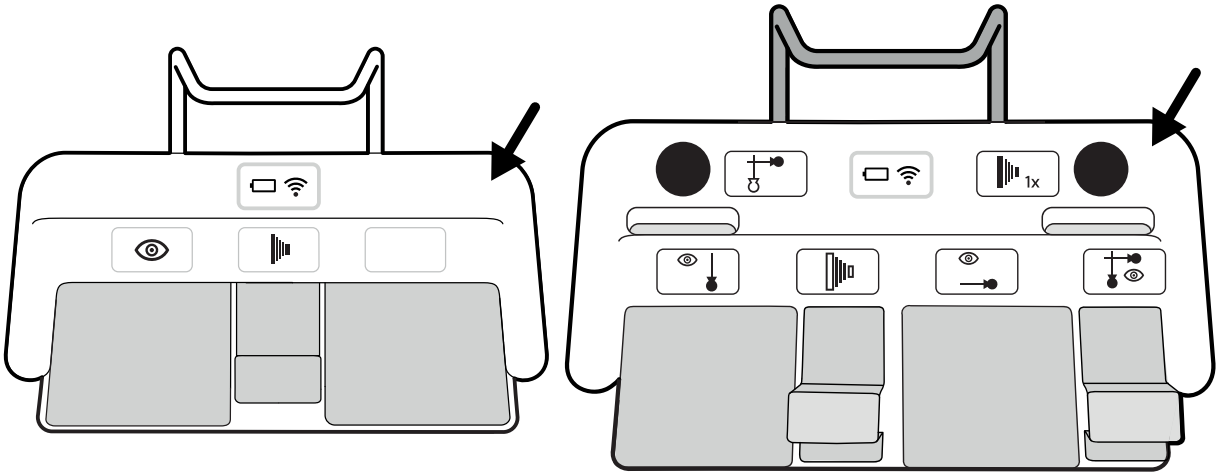

Figure 105 Location of the recess for identification labels

Function Labels

The pedal functions of the wireless foot switch are configurable by technical support. Any of the following functions can be assigned to a pedal. When the foot switch has been configured, a sticker indicating the function should be placed next to or on the pedal. The stickers used to indicate functions depend on the model of your foot switch. For more information about the model types, see *Equipment Labels* (page 367) (refer to the wireless foot switch labels in that section).

Type 1	Type 2	Function
		Fluoroscopy
		Fluoroscopy - biplane
		Fluoroscopy - frontal channel
		Fluoroscopy - lateral channel
		Select exposure channel
		Prepare and expose
		Single shot exposure

Type 1	Type 2	Function
		Room lighting

Care and Maintenance

When the wireless foot switch is not in use, or during transport or storage, keep it in a cool, dry place.

This wireless foot switch contains lithium-ion batteries. It must be disposed of according to local, state, and federal laws regarding the disposal of lithium-ion batteries. If you cannot dispose of the wireless foot switch in your area, return it to the manufacturer for disposal.

Switching the Wireless Foot Switch On and Off

NOTE ***You should ensure that the battery of the wireless foot switch is fully charged prior to using it. If the battery is depleted during a procedure, the foot switch will switch off. In this case, connect the charger to the foot switch and continue to use it. Take care not to damage the cable of the charger when moving equipment around the examination room (for example, when moving carts or beds). Alternatively, connect a wired foot switch to the auxiliary foot switch connector.***

NOTE ***If you use the wireless foot switch with the charger connected, you should ensure that the wireless foot switch is positioned to allow the charger to be easily disconnected if necessary.***

Before using the system, check that the wireless foot switch functions with the system. If identification labels have been used, check that the labels attached to the system and to the foot switch match. For more information, see *Identification Labels* (page 201).

The wireless foot switch may be put in a sterile plastic cover.

1 Switch the wireless foot switch on using the power switch on the back of the foot switch.

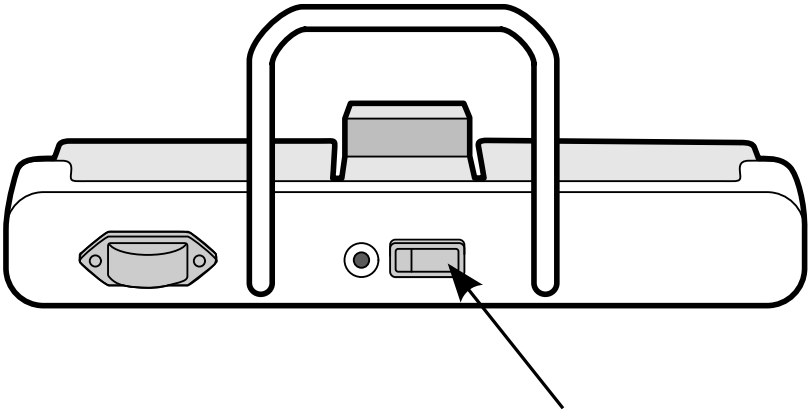

Figure 106 Wireless foot switch power switch (monoplane foot switch shown as an example, also applicable for the biplane foot switch)

2 Check the status of the indicator lights on the wireless foot switch to ensure that it has sufficient charge and that the wireless connection is operational.

The battery usage indications given in the table below are based on typical use patterns. The status of the battery indicator light depends on the model of your foot switch. For more information about the model types, see *Equipment Labels* (page 367) (refer to the wireless foot switch labels in that section).

Battery Indicator		Type 1	Type 2
	Green	Battery charge level is between 25% and 100%.	Battery charge level should provide more than 40 hours of use.
	Red	Battery charge level is between 0% and 25%.	Battery charge level should provide 20 to 40 hours of use.
	Red, flashing every 0.5s	Not applicable	Battery charge level will provide less than 20 hours of use.
	Red, flashing rapidly	Not applicable	Battery charge level is less than 1.5%. Charge the wireless foot switch battery before use.
	Green, flashing	Battery is charging.	Battery is charging.

Wireless Indicator		Type 1 and Type 2
	Off	Wireless connection is operational.
	Red	There is an error in the wireless connection. Do not use the foot switch. Wait for the wireless connection indicator to go out before using the foot switch. If the red indicator light is on for longer than 10 seconds, switch the foot switch off and then on again.

3 To switch the wireless foot switch off, use the power switch on the back of the foot switch.

Charging the Wireless Foot Switch Battery

A charger is supplied to recharge the battery of the wireless foot switch.

NOTE ***Use only the charger supplied with the wireless foot switch. Using any other charger may cause damage to the foot switch and void the warranty.***

1 Remove the cap from the charging port on the back of the wireless foot switch.

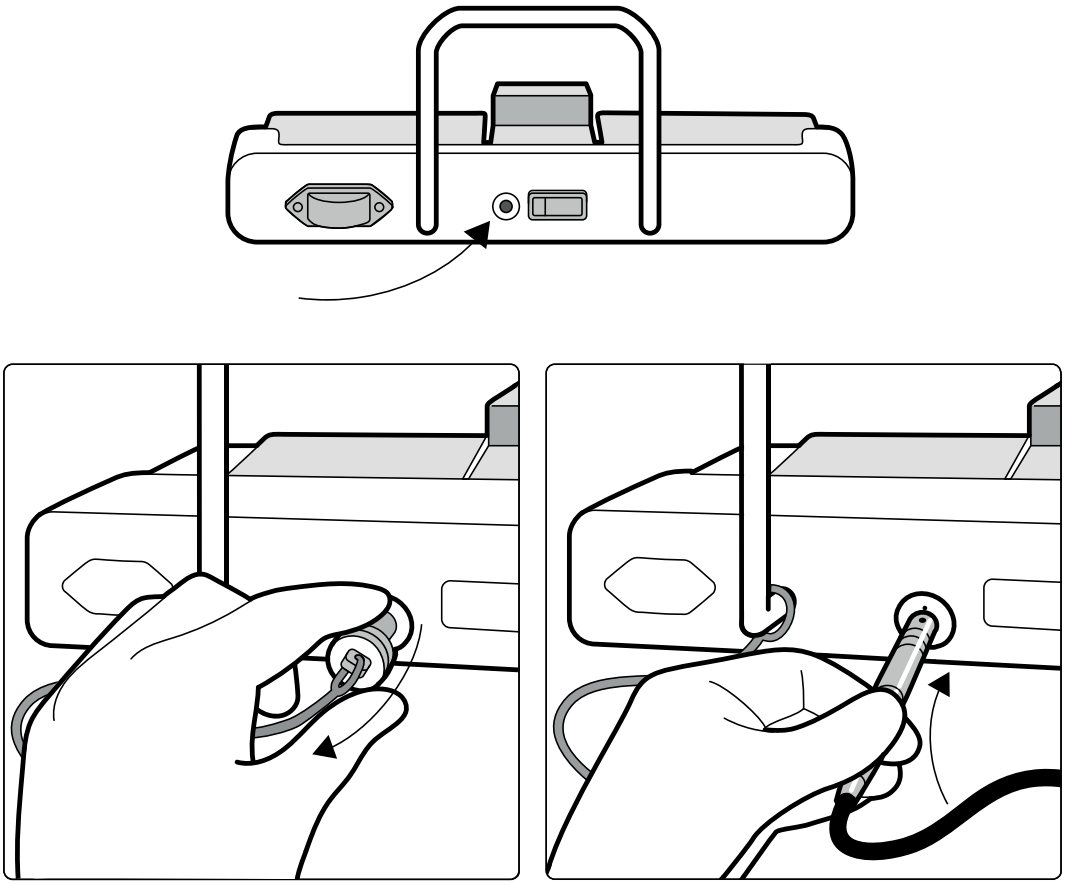

Figure 107 Wireless foot switch charging port (monoplane foot switch shown as an example, also applicable for the biplane foot switch)

2 Connect the charger to the charging port. Ensure that you align the dots on the charger cable and the charging port.

The battery indicator on the wireless foot switch flashes while the foot switch is charging.

NOTE ***If you use the wireless foot switch with the charger connected, you should ensure that the wireless foot switch is positioned to allow the charger to be easily disconnected if necessary.***

A normal, complete charge cycle takes more than 12 hours. We recommend that you charge the battery every week, or when the battery status indicator turns red. The battery has built-in safety devices to protect it from overcharging.

The duration of use after charging depends on the model of your foot switch. For more information about the model types, see *Equipment Labels* (page 367) (refer to the wireless foot switch labels in that section).

- For the type 1 wireless foot switch, a complete charge lasts for one week of use.
- For the type 2 wireless foot switch, a charge of between 6 to 8 hours provides up to 8 hours of continuous use.

NOTE ***If the battery is depleted within 2 days after a complete charge, contact technical support for a replacement battery. The battery may only be replaced by a qualified service engineer.***

11.1.18 Tabletop Accessory Clamps

Tabletop accessory clamps allow you to attach compatible accessories to the tabletop.

1 Slide the clamp on to the edge of the tabletop.

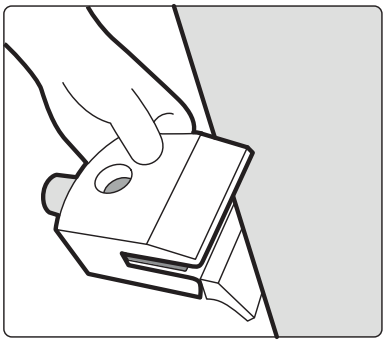

Figure 108 Sliding the clamp on to the edge of the tabletop

2 Secure the clamp by tightening the lever [1] on the underside of the clamp.

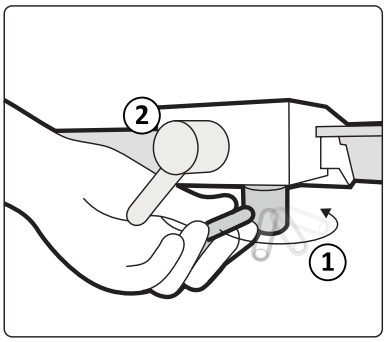

Figure 109 Securing the clamp to the tabletop

3 Fit an accessory in the clamp and tighten the lever [2] on the side of the clamp.

When a clamp does not have an accessory fitted, it should be removed from the tabletop.

11.2 Third-Party Interfaces

This section provides information about connecting third-party equipment to the system.

11.2.1 Compatibility Statements

Philips has defined compatibility statements for a variety of third-party products. A compatibility statement implies that a third-party product and the system are verified for mutual compatibility when operated in accordance with the manufacturers' instructions.

The compatibility statement means that the third-party product and the system, when used together, do not adversely affect the following:

- The intended use and essential performance of either system.
- The safety and effectiveness of either system.

11.2.2 Connecting an Injector

To connect an injector to the system, you use a specific connector on the interface panel on the rear side of the table base.

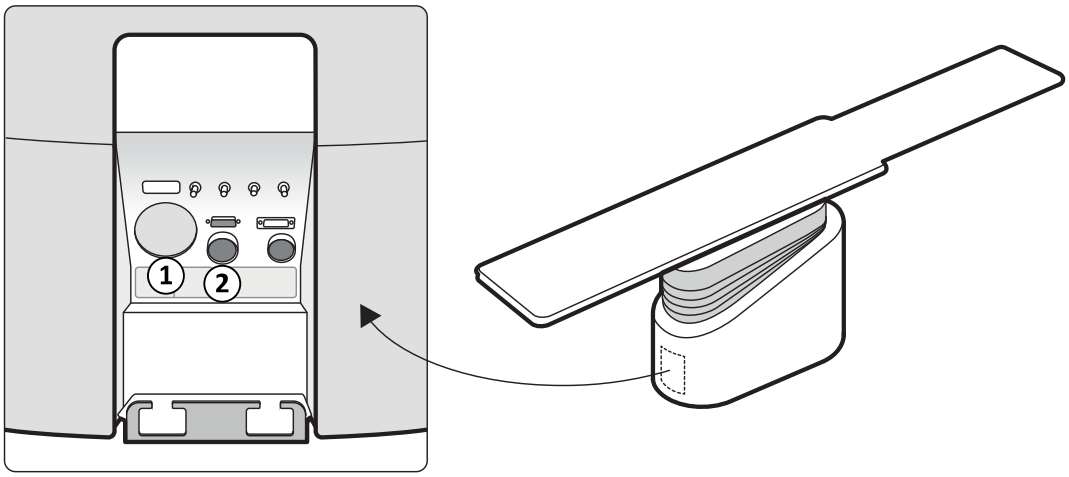

Figure 110 Injector connectors on the rear interface panel

Legend	
1	Connector for injectors in non-pedestal configuration
2	Connector for injectors in pedestal configuration

Ask your Philips representative for a compatibility statement for the injector device that you want to connect to your system.

Non-Pedestal Configuration

In the non-pedestal configuration, only the injector head and injector display unit are located in the examination room. The injector base unit is located in the technical room. An additional injector display unit can also be located in the control room. Injector connection [1] is used in this configuration.

Pedestal Configuration

In the pedestal configuration, the entire injector is located in the examination room except for an optional injector display unit in the control room. The injector is placed on a movable pedestal and can be easily connected and disconnected from the X-ray system using a Burndy connector. The Burndy connector is located at the rear interface panel at the table base (item [2] in the illustration).

If you are using an OR table, the rear interface panel at the table base cannot be used. Instead, a surgery wall connection box is provided in the examination room, but at a greater distance from the table.

11.2.3 Connecting Video Feeds

There are several possibilities for connecting third-party devices to the Philips interventional X-ray system to display video feeds.

Video feeds from third-party devices can be shown on the following:

- FlexVision or a dedicated Philips monitor.
- A third-party monitor, powered by the third-party system, but integrated within the monitor ceiling suspension.
- Switchable monitors using the MultiSwitch option.
- Control room monitors

Video feeds from the Philips interventional X-ray system can be displayed on third-party monitors.

NOTE ***Philips cannot guarantee the image quality or coordination of video feeds displayed on third-party monitors.***

The wall connection box assists with connecting third-party devices.

For more information, contact a Philips representative.

11.3 Other Devices

This section provides infomation about additional equipment that can be used with the system.

11.3.1 MultiSwitch (Option)

The MultiSwitch allows up to three additional PC-like modalities to be connected to the same, shared administration workspot (monitor, keyboard, and mouse), for example, Xcelera, Xcelera CLM, Interventional Workspot, and IntelliSpace Portal.

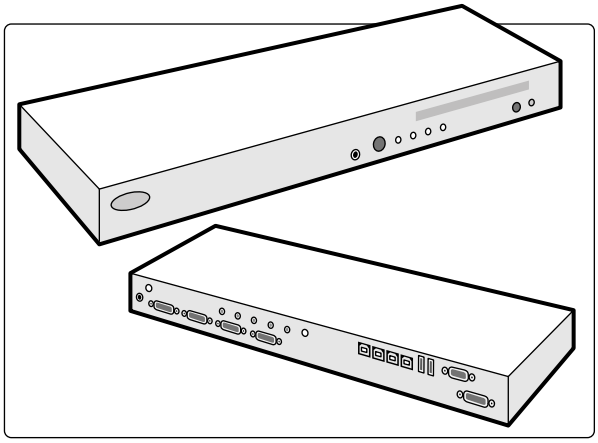

Figure 111 MultiSwitch unit

The MultiSwitch is used to switch the DVI video, keyboard and mouse signals between modalities that are not connected to the physical devices. The MultiSwitch is located on the workspot table.

Switching the workspot interface to one of the additional PC modalities is done manually using the pushbutton on the front of the MultiSwitch unit.

An indicator light on the MultiSwitch shows the selected input. Input selection is performed in sequential order.

The control room connection box houses the mains power connections for the following items:
- MultiSwitch
- Ethernet switch
- Added PC modalities

Power for the workspot, connection box, and its associated devices and the added PC modalities is provided by the system.

11.3.2 Wall Connection Box (Option)

The wall connection box provides connection points to the system for ethernet, video, and USB.

You can connect additional equipment to the system using a wall connection box.

NOTE ***While a wall connection box provides connection points for additional equipment, it does not provide power to connected equipment.***

Wall connection boxes can be installed as desired in the control room, the examination room, and the technical room.

For more information about the technical specification of the wall connection box, see the following sections:

- *Wall Connection Box* (page 291)
- *Installation and Equipment Connections* (page 384)

11.3.3 Intercom (Option)

An optional intercom is available to assist communication between the control room and the examination room.

Two intercom units are installed: one in the control room and one in the examination room.

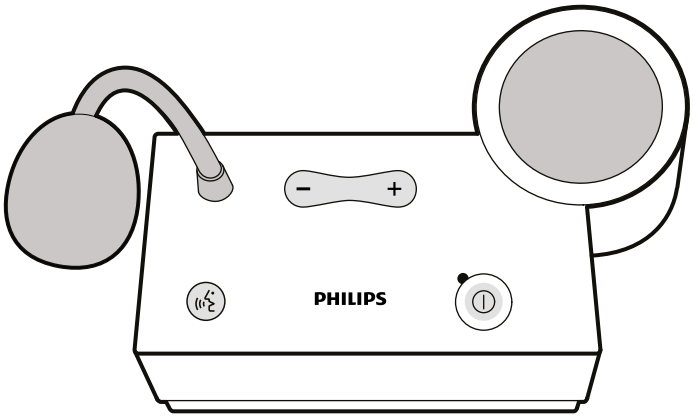

Figure 112 Intercom unit

The following controls are used to operate the intercom.

Control	Description
	Switch the intercom on and off. The indicator light is on when the intercom is switched on.
	Press and hold to speak.
	Volume control.

11.3.4 Equipment Rack (Option)

The ceiling-suspended equipment rack is a space-saving unit which helps you keep the examination room tidy by consolidating the separate equipment carriers associated with EP procedures, for example, and by streamlining cabling.

Additional power and network connection points are integrated with the equipment rack.

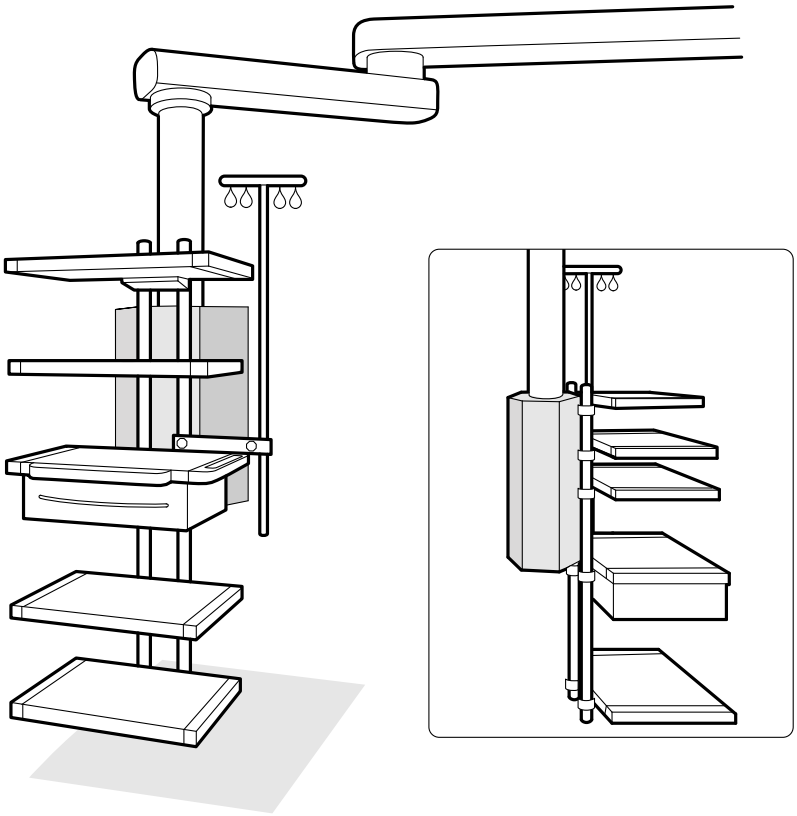

Figure 113 Equipment rack

For information on using and maintaining the equipment rack, refer to the Instructions for Use supplied with the equipment rack.

11.3.5 Pedestal (Option)

You can use the pedestal as a primary or secondary point of control for the system.

You can position the control module and the touch screen module on the pedestal. You can then position the pedestal in a more convenient position in the examination room, if desired.

WARNING
Do not push or lean against the pedestal.



WARNING
Do not attach any modules other than the control module or the touch screen module to the pedestal.



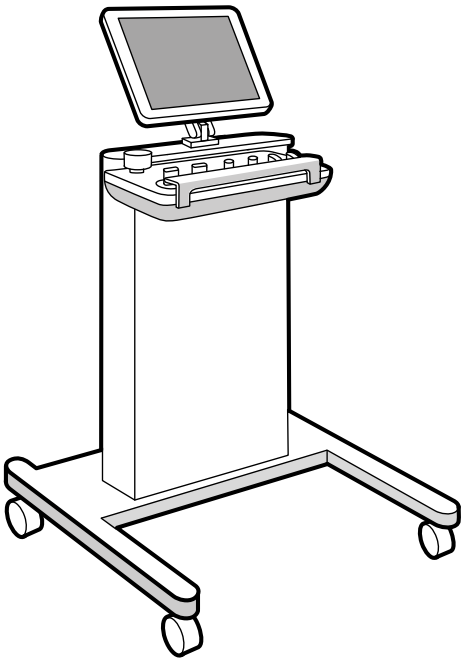

Figure 114 Pedestal

To support certain system configurations, you can use a compatible, ceiling-suspended equipment rack as an alternative to the pedestal.

11.3.6 Pan Handle (Option)

You can use the pan handle to release the tabletop brakes and float the tabletop.

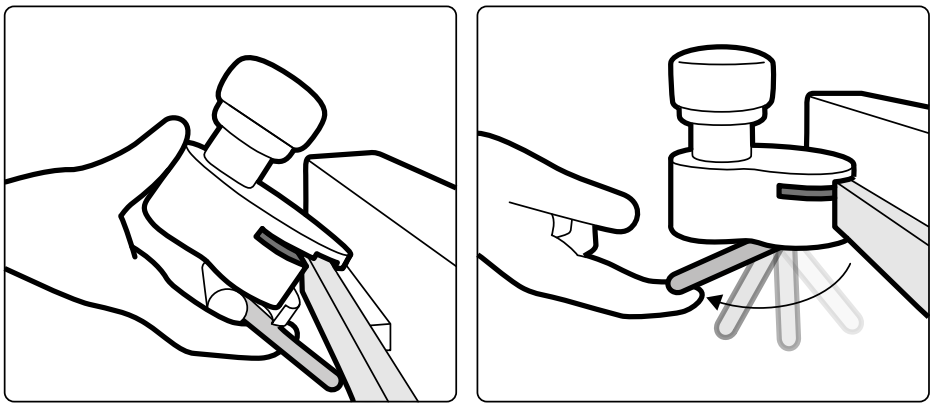

Figure 115 Pan handle

1 Clamp the pan handle to the accessory rail or to the tabletop.

2 Tighten the locking lever to secure the pan handle.

The function of the pan handle is configured by a service engineer and corresponds to the function configured for the **Float Tabletop** function on the control module:

- Alternating mode: When you press and release the pan handle, the tabletop brake is released and you can float the table. Press and release the pan handle again to activate the tabletop brake.
- Direct mode: When you press and hold the pan handle, the tabletop brake is released and you can float the table. Release the pan handle to activate the tabletop brake.

If your table has a tilt function, you can only float the tabletop longitudinally using the pan handle when the table is not tilted.

11.3.7 8-Meter Cable Assembly Kit (Option)

You can use an 8-meter cable assembly kit to connect other equipment to the system and to hospital power (for example, Philips CX50 ultrasound cart).

NOTE ***If the 8 meter cable assembly kit is disconnected at the equipment, it is possible that the cable be left on the floor with live voltage still present in the connection plug. This presents a risk of electric shock if fluids make contact with the connectors. To prevent this risk, the connection plug must be covered with the rubber cap attached to the connector after disconnecting the equipment cable, and the cable must be stored on the wall bracket next to the wall connection box.***

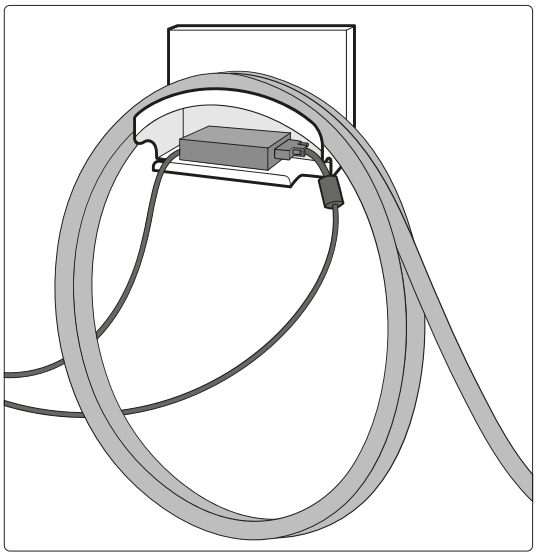

Figure 116 8-meter cable assembly kit

11.3.8 Table Interface Panels

The table interface panels are located under the tabletop and at the rear of the table base.

The table secondary circuit outlet and table base accessory rail provide additional connectivity to the system. It is possible to route cabling of external equipment through the rear interface panel on the rear side of the table base. For more information, contact technical support.

These interfaces provide a safe and standardized method for installing third party equipment and do not impose limitations on table movements.

Table Secondary Circuit Outlet

The secondary circuit outlet enables you to connect compatible medical electrical equipment, or electrical equipment compliant to IEC basic safety standards.

The secondary circuit outlet power socket is not intended to power medical equipment that has essential performance relying on mains power supply. The secondary circuit outlet socket provides up to 600 VA at 230 V (50/60 Hz).

For more information, see *Patient Table and Rear Panel Interfaces* (page 388).

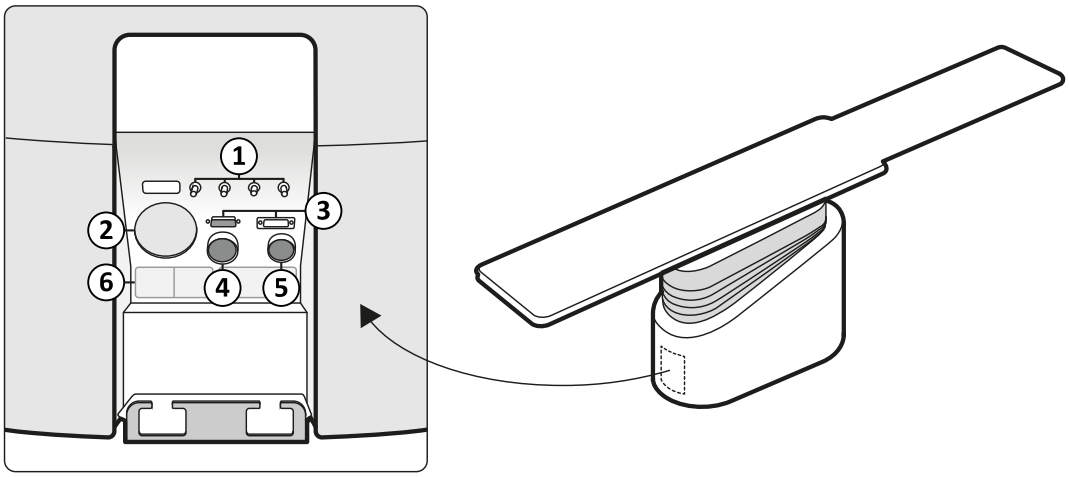

Figure 117 Rear interface panel on the rear side of the table base

Connectors		
1	Potential equalization points	Ground (earth) connection points (x4)
2	Injector connection (optional)	A connector can be installed in this position for a rack-mounted injector (if a connector is not installed, a blanking plate is used)
3	Foot switch connectors	Connectors for the foot switches
4	28-pin connector	Connector for pedestal-mounted injectors.
5	23-pin connector	Connector for external ECG and Physio equipment
6	Secondary circuit outlet connector	230 V (50/60 Hz)

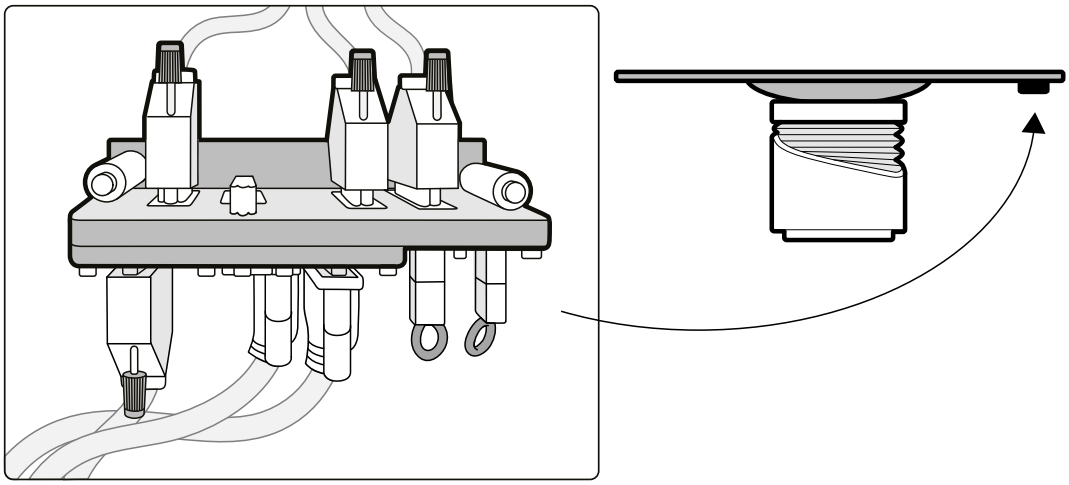

Figure 118 Rear interface panel under the tabletop

Table Base Accessory Rail

The table base accessory rail can carry equipment up to 10 kg. The maximum torque load (moment) is 30 Nm.

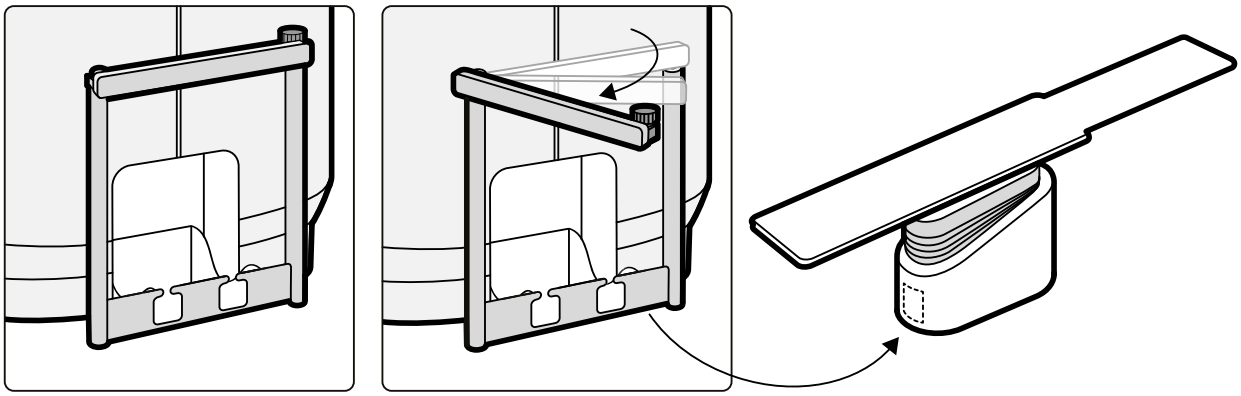

Figure 119 Table base accessory rail

12 User Customization

You can customize the system's functionality and configuration to suit the way you want to use it.

You can view or configure the following settings without a system administrator account.

- System and licence information including hospital and department names
- Date and time settings
- Physician list
- FlexSpot presets and preset groups
- FlexVision presets and preset groups
- Automatic position control settings
- X-ray protocols
- Viewing, processing and display preferences
- Annotations
- Quantitative analysis settings
- Print settings

NOTE ***Before you make changes to system customization settings, you should consider exporting the existing settings so you can import them later if you need to. Settings can only be imported or exported by a system administrator.***

12.1 Changing Your Password

It is important to ensure your password remains private at all times and it is good practice to change your password regularly.

You can change your password at any time when logged into the system. If you forget your password, your system administrator can reset it for you. For more information about resetting a password, see *Resetting a User's Password* (page 234).

To change your own password, ensure you are logged into the system and do the following:



1 In the review window, click **System** and select **Change Password**.

A dialog box is displayed requesting you to enter your old password and to set your new password.

2 Check the **User Name** displayed is correct.

If the **User Name** displayed is not yours, you must log out of the system and log in using your own user name and password.

3 Enter your **Old Password**.

4 Enter your **New Password**.

You must follow these rules when setting a password:

- The password field cannot be empty.
- Passwords cannot contain user names.
- Passwords must conform to the password policy settings (see *Managing Users and System Logon* (page 233)).
- If password complexity is enabled, passwords must contain characters from three of the following categories:
  - Uppercase letters
  - Lower case letters
  - Numbers (0 through 9)
  - Non-alphabetic characters (for example: ! $ # %)

5 Enter your new password again in **Confirm Password**.

6 Do one of the following:

a To close the dialog box without changing your new password, click **Cancel**.

b To close the dialog box and change your password, click **Apply**.

12.2 Viewing System and License Information

You can view basic information about the system and the licenses installed on the system.



1 On the **System** menu, click **Customization** to display the **System Customization** window.

2 In the **General** settings group, click **System and License Information**.

System and license information is displayed in the right pane:
- Hospital and department names
- Local system ID
- Computer and host names
- IP and MAC addresses
- Installed hardware and software licenses

3 To close the **System Customization** window, click **Close**.

12.3 Setting the Date and Time

You can choose whether the date and time should be set manually or automatically.



1 On the **System** menu, click **Customization** to display the **System Customization** window.

2 In the **General** settings group, click **Date and Time Settings**.

3 To set the date and time automatically using a time server, enable the **Time Server** by selecting **Enabled**.

If the time server is enabled, the date and time is automatically synchronized after startup when a connection with the time server is established. A manually entered date and time is overwritten when the date and time are automatically synchronized. The time and date is synchronized hourly when the system is connected to the time server. The system date and time cannot be changed manually if the time server is enabled.

If the time server is **Enabled**, ensure that the correct host name or IP address for the time server is entered in the field below the radio buttons.

4 To set the date and time manually, do the following:

a Select **Disabled** for the time server.

b Select the correct date from the **System Date** drop-down calendar.

c Enter the correct time in the **System Time** field.

5 Select the correct **Time Zone** from the list.



6 To undo any changes you have made, click **Undo Changes**.



7 To save your changes, click **Save**.

8 To close the **System Customization** window, click **Close**.

12.4 Changing the Date and Time Formats

The system displays both short and long versions of the date and time. You can change the way that they are displayed to suit your local preferences.



1 On the **System** menu, click **Customization** to display the **System Customization** window.

2 In the **General** settings group, click **Date and Time Settings**.

3 Select the formats to be used for **Short Date** and **Long Date** from the available lists.

4 Select the formats to be used for **Short Time** and **Long Time** from the drop-down lists.

5 Select which day should be regarded as the **First Day of the Week** from the drop-down list.



6 To undo any changes you have made, click **Undo Changes**.



7 To save your changes, click **Save**.

8 To close the **System Customization** window, click **Close**.

12.5 Changing the Physician List

You can add, remove, or change the names of physicians used on the system. Instead of removing a physician from the system, you can choose whether physicians are visible on the system.



1 On the **System** menu, click **Customization** to display the **System Customization** window.

2 In the **General** settings group, click **Physician List**.

3 To change a physician's details do the following:

a Select the physician in the **Physician List**.

Physician Details are displayed beside the **Physician List**.

b Change the **Physician Details**.

4 To add a new physician do the following:



a Click **New**.

A new physician is added to the **Physician List** with the name **New Physician**.

b Select the new physician in the **Physician List**.

c Change the **Physician Details** to display the correct name.

d If desired, you can hide the physician on the system by clearing the check box beside the physician's name in the **Physician List**.

NOTE ***When a physician is added, they are visible on the system by default.***



5 To delete a physician, click **Delete** and confirm that you want to delete the physician.



6 To undo any changes you have made, click **Undo Changes**.



7 To save your changes, click **Save**.

8 To close the **System Customization** window, click **Close**.

12.6 Managing Presets from the Control Room

You can edit, create, and delete presets for use with FlexSpot and FlexVision, from the FlexSpot primary monitor in the control room. If FlexSpot is not installed, you can manage FlexVision presets from the review monitor.

Your system must have FlexSpot or FlexVision equipment installed before you can manage presets.

Presets are predefined screen layouts. Using these preset layouts, you can define your preferred screen layout to assist you during a study. You manage FlexSpot and FlexVision presets in the same way.

For information about managing presets in the examination room, see *Managing Presets for FlexVision Using the Touch Screen Module* (page 222).

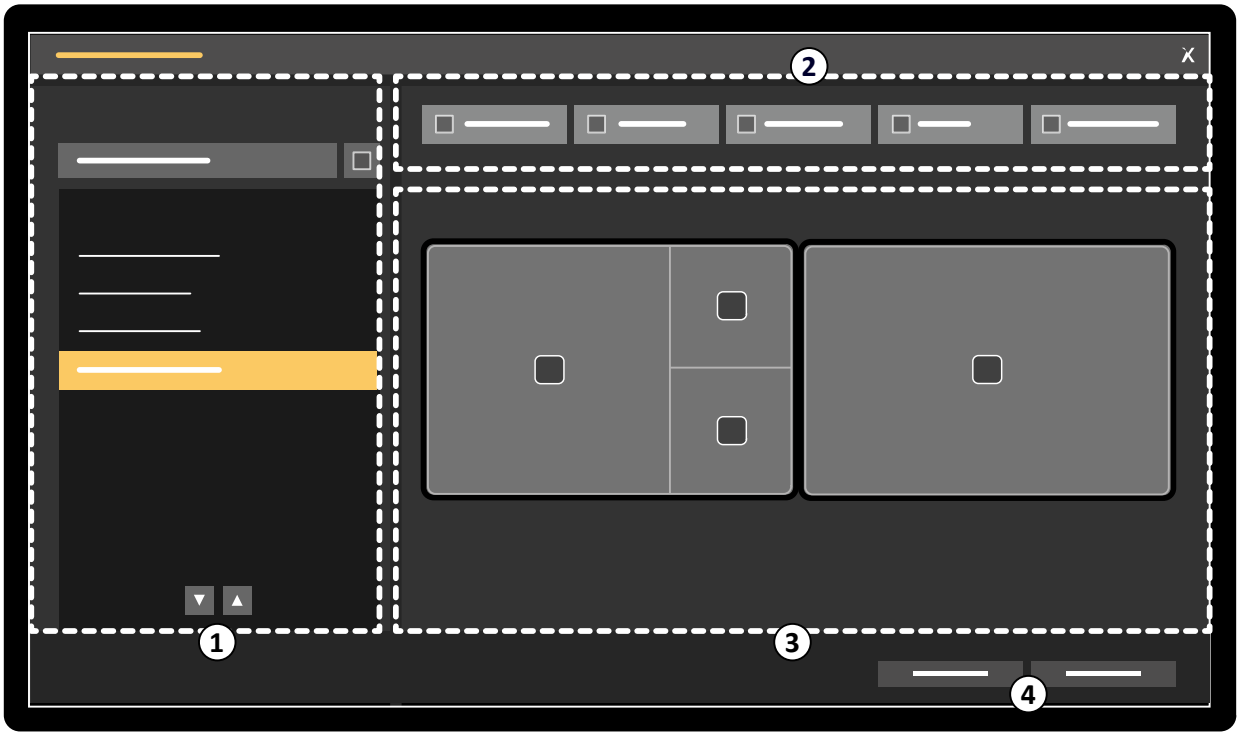

Figure 120 **FlexSpot Presets Manager** dialog box (the **FlexVision Presets Manager** is similar)

Legend			
1	**Presets Group** list	3	Current preset
2	Toolbar	4	Function buttons



1 To manage FlexSpot presets, click **FlexSpot** and select **Manage Presets**.

The **FlexSpot Presets Manager** is displayed.



2 To manage FlexVision presets, click **FlexSpot** and select **Manage FlexVision Presets**.

The **FlexVision Presets Manager** is displayed.

3 To create a new preset, do the following:

a Select the desired preset group in the **Presets Group** list.



b Click **New**.

The **New Preset** dialog box is displayed.

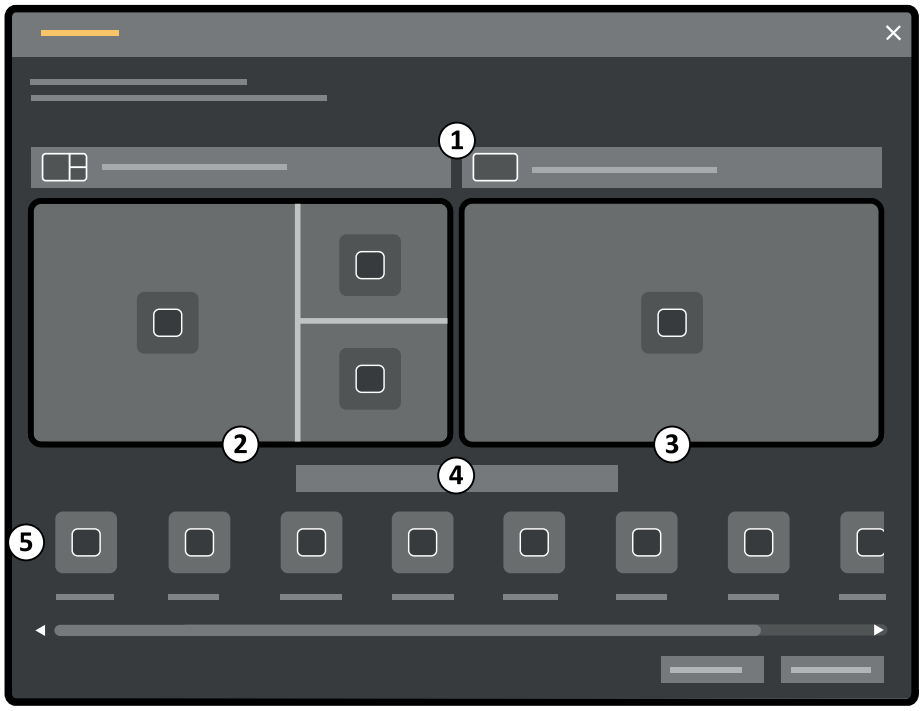

Figure 121 New Preset dialog box

Legend			
1	Layout selection lists	4	Preset name
2	Acquisition window	5	Application list
3	Review window		

Your monitor configuration is depicted in the dialog box as thumbnail images. For FlexVision, only one monitor is shown.

c For each monitor depicted, select the desired layout using the lists above each monitor thumbnail image.

d Enter a name for your preset.

e Drag the applications you want to be displayed in your preset, from the application list to the desired positions on the monitors.

f To save your preset, click **Save**.

Your preset is saved within the selected preset group.

g To close the dialog box without saving your preset, click **Cancel**.

4 To edit a preset, do the following:

a Select the preset group containing the preset you want to edit.

b Select the preset you want to edit, in the list.



c Click **Edit**.

A dialog box is displayed.

d Edit the preset as desired.

e To save your changes, click **Save**.

f To close the dialog box without saving your changes, click **Cancel**.

5 To copy an existing preset, do the following:

a Select the preset group containing the preset you want to copy.

b Select the preset you want to copy, in the list.



c Click **Copy To...** .

A dialog box is displayed.

d Select the preset group to copy the preset to.

e To copy the preset to the selected preset group, click **OK**.

f To close the dialog box without copying the preset, click **Cancel**.

6 To move a preset to a different preset group, do the following:

a Select the preset group containing the preset you want to move.

b Select the preset you want to move, in the list.



c Click **Move To...** .

A dialog box is displayed.

d Select the preset group to move the preset to.

e To move the preset to the selected preset group, click **OK**.

f To close the dialog box without moving the preset, click **Cancel**.

7 To use the selected preset on the system now, click **Activate**.

The selected preset is displayed on the system monitors.

8 Click **Close** to close the dialog box.

12.7 Managing Preset Groups from the Control Room

You can create, rename, reorder, and delete preset groups for FlexSpot and FlexVision from the control room.

Presets are organized into groups allowing you to choose which group to add a preset to.

For information about managing preset groups in the examination room, see *Managing Preset Groups for FlexVision Using the Touch Screen Module* (page 225).



Figure 122 Manage Preset Groups dialog box (FlexVision similar)

Legend	
1	Function buttons
2	Preset groups list



1 To manage FlexSpot presets, click **FlexSpot** and select **Manage Presets**.

The **FlexSpot Presets Manager** is displayed.



2 To manage FlexVision presets, click **System** and select **Manage FlexVision Presets**.

The **FlexVision Presets Manager** is displayed.



3 Click **Manage Preset Groups**.

The **Manage Preset Groups** dialog box is displayed.

4 To create a new presets group, do the following:



a Click **New**.

A dialog box is displayed.

b Enter a name for the new group.

c To save the new group, click **OK**.

d To close the dialog box without saving the new group, click **Cancel**.

5 To rename a preset group, do the following:

a Select the desired group in the list.



b Click **Rename**.

A dialog box is displayed.

c Enter a new name for the group.

d To save the new group name, click **OK**.

e To close the dialog box without saving the new group name, click **Cancel**.

6 To delete a preset group, do the following:

a Select the desired group in the list.



b Click **Delete**.

A confirmation message is displayed.

c To delete the group, click **OK**.

d To close the confirmation message without deleting the group, click **Cancel**.

7 To reorder the preset groups in the list, do the following:

a Select the preset you want to move.

b Click the arrows to move the preset up and down within the list.





8 To restore the factory default preset groups, click **Restore factory default presets**.

9 Click **Close** to close the dialog box.

12.8 Managing Presets for FlexVision Using the Touch Screen Module

You can edit, create, and delete presets for use with FlexVision.

Your system must have FlexVision installed before you can manage presets.

Presets are predefined screen layouts. Using these preset layouts, you can define your preferred screen layout to assist you during a study.

For information about managing presets from the control room, see *Managing Presets from the Control Room* (page 218).



1 On the touch screen module, tap the application selector.



2 Tap **FlexVision**.



3 Tap **Manage Presets**.

A menu is displayed where you can manage presets.

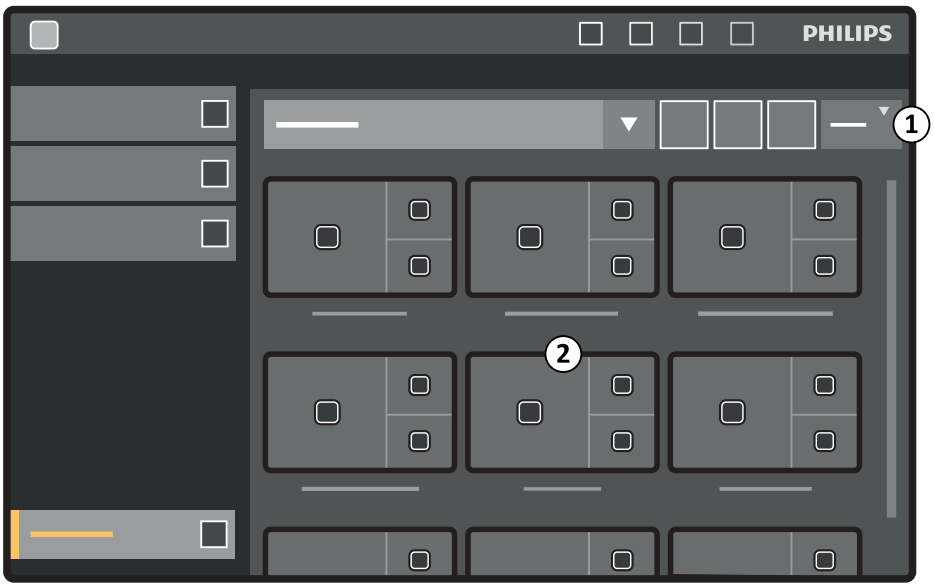

Figure 123 FlexVision preset menu

Legend	
1	Function buttons
2	Available presets

Each preset is depicted with a thumbnail image showing the predefined screen layout and applications.

4 To create a new preset, do the following:

a Select the desired preset group in the list.



b Tap **New**.

The **New Preset** dialog box is displayed.

c Select a screen layout and tap **Next**.

d Select the applications you want to include in your preset and tap **Next**.

NOTE ***The system automatically selects applications that are mandatory for the current situation in the examination room. You cannot deselect mandatory applications, but to prevent applications from being defined as mandatory, arrange the situation in the examination room accordingly. For example, to create a preset that does not include the live lateral application as a mandatory, park the lateral stand or disable X-ray before creating the preset.***

The number of available windows in the selected layout is indicated.

To move back a step you can tap **Previous**.

e Drag each application from the application list to the desired position on the monitor and tap **Next** when you have finished.

f Select a preset group from the list.

g Enter a name for your preset.

h To save your preset, tap **Complete**.

Your preset is saved within the selected preset group.

i To close the dialog box without saving your preset, click **Cancel**.

5 To edit a preset, do the following:

a Select the desired preset group in the list.



b Tap **Edit**.

The **Edit Preset** dialog box is displayed.

The settings already saved for the preset are displayed at each step in the wizard.

c Select a new screen layout if desired and tap **Next**.

d Select or deselect the applications you want to include in the preset and tap **Next**.

The system automatically selects mandatory applications. You cannot deselect these applications.

The number of available windows in the selected layout is indicated.

To move back a step you can tap **Previous**.

e Drag an application to a new desired position on the monitor and tap **Next** when you have finished.

f To change the preset group, select a different preset group from the list.

g To change the name of the preset, enter a new name.

h To save your changes, tap **Complete**.

Your changes are saved.

i To close the dialog box without saving your changes, click **Cancel**.

6 To copy an existing preset, do the following:

a Select the preset group containing the preset you want to copy.

b Select the preset you want to copy.

c Tap **More**.



d Tap **Copy To...** .

A dialog box is displayed.

e Select the preset group to copy the preset to.

f To copy the preset to the selected preset group, tap **OK**.

g To close the dialog box without copying the preset, tap **Cancel**.

7 To move a preset to a different preset group, do the following:

a Select the preset group containing the preset you want to move.

b Select the preset you want to move, in the list.

c Tap **More**.



d Tap **Move To...** .

A dialog box is displayed.

e Select the preset group to move the preset to.

f To move the preset to the selected preset group, tap **OK**.

g To close the dialog box without moving the preset, tap **Cancel**.

8 To change the order presets are displayed in, do the following:

a Tap **More**.



b Tap **Order Presets**.

c Select the preset you want to move.

d Tap **Left** or **Right** to move the preset thumbnail to the desired position in the list.

e To save the preset in the new position, tap **Save**.

f To close the menu without saving the preset in the new position, tap **Cancel**.

12.9 Managing Preset Groups for FlexVision Using the Touch Screen Module

You can create, rename and delete preset groups for FlexVision using the touch screen module.

Preset groups allow you to group presets to make them easier to find or to group related presets together.

For information about managing preset groups from the control room, see *Managing Preset Groups from the Control Room* (page 220).



1 On the touch screen module, tap the application selector.



2 Tap **FlexVision**.



3 Tap **Manage Presets**.

4 Tap **More** and select **Manage Groups**.

5 To create a new preset group, do the following:



a Tap **New**.

A new preset group is added to the list of available preset groups with the name **My Preset Group**.

b Select the new preset group in the list and perform step 6 to rename the preset group.

6 To rename a preset group, do the following:

a Select desired preset group in the list.



b Tap **More** and select **Rename**.

The keyboard on the touch screen module is enabled.

c Edit the preset group name using the keyboard on the touch screen module.

d To exit without renaming the preset group, tap **Cancel**.

e To rename the preset group, tap **Save**.

7 To delete a preset group, do the following:

NOTE ***Deleting a preset group will delete all presets contained in the preset group.***

a Select desired preset group in the list.



b Tap **More** and select **Delete**.

A confirmation dialogue box is displayed.

c To close the dialog box without deleting the preset group, tap **Cancel**.

d To delete the preset group, tap **Delete**.

The preset group is deleted, including all presets contained within it.

8 To restore the factory default preset groups, do the following:

NOTE ***Restoring the factory default preset groups will overwrite all existing presets and preset groups, including customized presets and preset groups.***



a Tap **More** and select **Restore Defaults**.

A confirmation dialogue box is displayed.

b To close the dialog box without restoring the factory default preset groups, tap **Cancel**.

c To restore the factory default preset groups, tap **Delete**.

The factory default preset groups and presets are restored. Customized presets and preset groups are deleted.

12.10 Changing Automatic Position Control Settings

You can customize the Automatic Position Control (APC) settings in the system for future use.

The system allows you to change, rename, copy, delete, and add new APC positions. You can also store the current geometry for future use as an APC position.



1 On the **System** menu, click **Customization** to display the **System Customization** window.

2 In the **X-Ray Application** settings group, click **APC Positions**.

If you are using a biplane system, the **APC Positions** dialog box allows you to select between **Monoplane** or **Biplane** positions. You can use **Monoplane** positions on a biplane system, in which case, only the position information for the frontal channel is stored.

3 To rename an existing APC position, do the following:

a Select the APC position in the **Position Name** list.

The **APC Position Details** are displayed.

b Enter a new name in the **Position Name** field.

The **Position Name** list is automatically updated.

4 To change the settings of a monoplane position, do the following:

a Select **Monoplane**.

b Select the APC position in the **Position Name** list.

c Set the **Rotation Angle** for the frontal stand using the slider or by entering a number in the box.

NOTE ***The labels used to indicate Rotation Angle and Angulation Angle depend on the setting that is configured for Rotation/Angulation Display Flavor.***

d Set the **Angulation Angle** using the slider or by entering a number in the box.

e Set the **Source Image Distance** using the slider or by entering a number in the box.

f Select the **Detector Orientation** from the drop-down list.

5 To change the settings of a biplane position, do the following:

a Select **Biplane**.

b Select the APC position in the **Position Name** list.

c In the **Frontal** section, configure the following settings:

– Set the **Rotation Angle** using the slider or by entering a number in the box.

NOTE ***The labels used to indicate Rotation Angle and Angulation Angle depend on the setting that is configured for Rotation/Angulation Display Flavor. This also applies to the angles in the Lateral section.***

– Set the **Angulation Angle** using the slider or by entering a number in the box.
– Set the **Source Image Distance** using the slider or by entering a number in the box.
– Select the **Detector Orientation** from the drop-down list.

d In the **Lateral** section, configure the following settings:

– Set the **Rotation Angle** using the slider or by entering a number in the box.
– Set the **Angulation Angle** using the slider or by entering a number in the box.
– Set the **Source Image Distance** using the slider or by entering a number in the box.

6 To add a new position, do the following:



a Click **New**.

A new position is added to the list with the name *New APC Position*.

b Select the new position in the **Position Name** list.

c Enter a new **Position Name**.

d Configure the position settings as described above.

7 To copy an existing position, do the following:



a Click **Copy**.

A new position is added to the list and is identified as a copy.

b Select the copied position in the **Position Name** list.

c Enter a new **Position Name**.

d Configure the position settings as described above.

8 To delete a position:

a Select the desired position in the **Position Name** list.



b Click **Delete**.

c Confirm that you want to delete the position.



9 To undo any changes you have made, click **Undo Changes**.



10 To save your changes, click **Save**.

NOTE ***The changes take effect after the next system shutdown and startup.***

11 To close the **System Customization** window, click **Close**.

12.11 Customizing APC Positions for X-ray Protocols

You can customize the automatic position control settings that are available for each X-ray protocol.

Each X-ray protocol is associated with a defined list of automatic position control settings. You can change which positions can be recalled for each X-ray protocol.

NOTE ***Before you can select an automatic position control position, it must exist in the list of available positions.***

For more information about managing automatic position control positions, see *Changing Automatic Position Control Settings* (page 226).



1 On the **System** menu, click **Customization** to display the **System Customization** window.

2 In the **X-Ray Application** settings group, click **X-ray Protocols**.

3 Select the desired X-ray protocol in the **X-ray Protocols** list.

The list displays the parent X-ray protocols by default. You can expand each parent protocol to allow you to select a child protocol.

Changing the available positions for a parent protocol will make the selected positions available for all the child protocols contained within the parent protocol.

Changing the available positions for a child protocol will make the selected positions available only in the child protocol.

4 In the **Details** area, select the **APC Positions** you want to be available for the selected X-ray protocol.

5 To change the order the selected positions are displayed in the system, do the following:

a In the **APC Positions Order** list, select the position you want to move.

b Click the up or down buttons to move the position up or down in the list.





6 To undo any changes you have made, click **Undo Changes**.



7 To save your changes, click **Save**.

NOTE ***The changes take effect after the next system shutdown and startup.***

8 To close the **System Customization** window, click **Close**.

12.12 Changing Viewing Preferences

You can change some viewing settings to suit the way you use the system.

The viewing settings you can change are:
- The X-ray image displayed when you open a series.
- The way that navigation and replay is managed between series.
- Maximum series and study replay times.
- The way that angles are displayed on the system.



1 On the **System** menu, click **Customization** to display the **System Customization** window.

2 In the **X-Ray Application** settings group, click **Viewing and Processing**.

3 To change the default image displayed when you open a series, select a new setting in the **Default Active X-ray Image** list.

The settings available are:

- **First image**: displays the first image in the series.
- **Middle image**: displays the middle image in the series.

The default selection is **Middle image**.

4 To change the way that navigation works when you reach the beginning or end of a study, select a new setting in the **Image Navigation Model** list.

The settings available are:
- **Navigate images in all series**: image navigation does not stop at the end of the current series, but continues to the next available series for in the selected study.
- **Stop at the beginning and at the end of the series**: image navigation stops at the beginning or end of the current series.
- **Step through the images in a loop**: image navigation of the current series continues until stopped.

5 To specify a maximum length of time for series image replay, enter a value in seconds for **Replay Time Out**.

6 To specify a maximum length of time for study image replay, enter a value in seconds for **Study Cycle Replay Time Out**.

7 To change the way that angles are displayed on the system, select the angle flavor in the **Rotation/ Angulation Display Flavor** list.

The settings available are:
- **Cardio (LAO/RAO, CRAN/CAUD)**
- **Vascular (Rot, Ang)**



8 To undo any changes you have made, click **Undo Changes**.



9 To save your changes, click **Save**.

NOTE ***The changes take effect after the next system shutdown and startup.***

10 To close the **System Customization** window, click **Close**.

12.13 Changing Display Preferences

To ensure the correct mouse movements between screens, you can select the control monitor configuration you are using.

You can also specify a waiting time for screen saver activation.



1 On the **System** menu, click **Customization** to display the **System Customization** window.

2 In the **X-Ray Application** settings group, click **Viewing and Processing**.

3 To ensure the correct mouse movements between the acquisition and review windows, select the configuration you are using in the **Displays and Mouse Control** settings.

4 To change the waiting time before the screen saver is activated, select a suitable time in the **Screen Saver Wait Time** list.

5 To immediately activate the screen saver, click **Activate Screen Saver**.

Moving the mouse or pressing any key on the keyboard will deactivate the screen saver.



6 To undo any changes you have made, click **Undo Changes**.



7 To save your changes, click **Save**.

NOTE ***The changes take effect after the next system shutdown and startup.***

8 To close the **System Customization** window, click **Close**.

12.14 Customizing Predefined Annotations

Some annotations are predefined but you can customize them.

When customizing predefined annotations, you can change the text, the color and the size for each annotation.



1 On the **System** menu, click **Customization** to display the **System Customization** window.

2 In the **X-Ray Application** settings group, click **Annotations**.

A list of predefined annotations is displayed, with details for the selected annotation shown in the **Annotation Details**.

3 To create a new annotation, do the following:



a Click **New**.

A new annotation is added to the list with the text **New annotation**.

b Select the new annotation in the list and edit the annotation (step 6).

4 To copy an existing annotation, do the following:



a Click **Copy**.

A new annotation is added to the list and is marked as a copy of the original annotation.

b Select the copied annotation in the list and edit the annotation (step 6).

5 To edit an existing annotation, do the following:

You can see a preview of the annotation in the **Annotation Details**.

a Select the desired annotation in the **Annotations** list.

b To change the text of the annotation, enter new text in the **Annotation Details**.

c To change the size of the annotation, select a size.

d To change the default color of the annotation, click on a color to select it.

6 To delete an annotation, do the following:

a Select the desired annotation in the **Annotations** list.



b Click **Delete**.

A confirmation dialog box is displayed.

c To cancel without deleting the annotation, click **Cancel**.

d To delete the annotation, click **OK**.



7 To undo any changes you have made, click **Undo Changes**.



8 To save your changes, click **Save**.

9 To close the **System Customization** window, click **Close**.

12.15 Changing Print Settings

You can change the default printer settings and the information shown on printed pages.

When printing an image, you can show or hide additional information on the page.

- Patient details
- Study description
- Physician
- Hospital name

You can also specify which default printer and media types to use.

NOTE ***When handling personal data, do so in accordance with the privacy policies that apply in your healthcare environment and privacy laws that apply in your region.***



1 On the **System** menu, click **Customization** to display the **System Customization** window.

2 In the **Print Application** settings group, click **Print**.

3 Select the desired information in the **Page Header and Footer Information** by selecting or clearing the desired check boxes.

4 Set each of the **Print Preferences** as desired.

NOTE ***If you select Optimize for biplane image printing, frontal and lateral images are printed side by side unless you change the page layout to 1x1 or a single column.***



5 To undo any changes you have made, click **Undo Changes**.



6 To save your changes, click **Save**.

7 To close the **System Customization** window, click **Close**.

13 System Administration

With a system administrator account, you can customize many aspects of the system's functionality to suit the way the system is used in your hospital.

To change the following settings you must have a system administrator user account.

- Regional settings
- Audit trail
- Users and logon requirements
- Patient Administration, including storage devices
- RIS code mapping / ProcedureCard mapping
- DICOM configuration
- Export protocols
- Automatic data transfer
- ProcedureCards
- Importing and exporting settings

NOTE ***Before you make changes to system customization settings, you should consider exporting the existing settings so you can import them later if you need to. For more information, see*** ***Exporting Settings (page 252)******.***

13.1 Changing Regional Settings

You can change the language used in the system, and the way measurements, numbers, and timings are displayed, to suit your local preferences.

The system user interface supports several languages and you can change the language in use. The Instructions for Use within the system can also be viewed in different languages.

NOTE ***You can view the Instructions for Use in a different language than that used for the user interface since the Instructions for Use are available in a larger number of languages than the user interface supports.***



1 On the **System** menu, click **Customization** to display the **System Customization** window.

2 In the **General** settings group, click **Regional Settings** .

3 To change the system user interface language, select the desired **Language**.

4 To change the language you use to provide inputs and the associated keyboard layout, select the desired **Input Language and Keyboard**.

5 To change the Instructions for Use language, select the desired **Instructions for Use Language**.

6 Select the desired **Decimal Symbol** to use from the drop-down list.

7 Select the **Digit Grouping Symbol** to use from the drop-down list.

8 Select the **Measurement System** to use from the drop-down list.

9 Select the format used to display fluoroscopy timings from the **Fluoro Time Display Format** drop-down list.

10 Select the units used to display detector size from the **Detector Size Display Unit** drop-down list.



11 To undo any changes you have made, click **Undo Changes**.



12 To save your changes, click **Save**.

NOTE ***The changes take effect after the next system shutdown and startup.***

13 To close the **System Customization** window, click **Close**.

13.2 Configuring Audit Trail Settings

You can configure the settings used in the system to produce audit logs.



1 On the **System** menu, click **Customization** to display the **System Customization** window.

2 In the **General** settings group, click **Audit Trail**.

3 To enable the **Local Audit Trail**, select **Enabled**.

4 To enable the **Remote Audit Trail**, select **Enabled** and configure the following repository settings.

a Enter the **Host Name or IP Address** of the central audit repository.

b Click the **Network Protocol** box and select a protocol for communication with the central audit repository.

c Enter the **Port Number** for communication with the central audit repository.

d To enable secure communication, select **Use Authentication**.

e To enable the use of encryption, select **Use Encryption**.

This option is only available if **Use Authentication** is selected.

f If **Use Authentication** is selected, click the **Certificate** box and select a local certificate to use for authentication.



5 Click **Test Connection**.

The result of the test is indicated by an icon.

	Test successful
	Test failed

If the test fails, more information is provided.



6 To undo any changes you have made, click **Undo Changes**.



7 To save your changes, click **Save**.

NOTE ***The changes take effect after the next system shutdown and startup.***

8 To close the **System Customization** window, click **Close**.

13.3 Managing Users and System Logon

You can manage user accounts and allow emergency access, or configure the system to log on automatically when started.



1 On the **System** menu, click **Customization** to display the **System Customization** window.

2 In the **General** settings group, click **System Logon**.

3 To enable automatic logon when the system starts, select the **System automatic logon** check box and select the **Automatic logon User Name** to be used from the drop-down list.

4 To enable emergency system access, select the **Allow emergency system access** check box.

5 To change password policy, do one or all of the following:
- Enter the **Maximum password age** (days).
- Enter the **Minimum password length** (characters).
- Enable or disable **Password complexity**.

6 To change a user account's details, select the user account in the **User Accounts** list and change the user account's details in the **Details** area.



7 To undo any changes you have made, click **Undo Changes**.



8 To save your changes, click **Save**.

9 To close the **System Customization** window, click **Close**.

13.3.1 Adding and Deleting Users

A system administrator can create, change, or delete user accounts.

You add and delete users in the **System Logon** dialog box.



1 In the **System Logon** dialog panel, click **New**.

A new user is displayed in the list with the name **New User**.

2 Select the new user in the **User Accounts** list.

3 Enter a **User Name** in the **Details** section.

NOTE ***You cannot change the user name after saving the new user's details.***

4 Enter the user's **Full Name** and a **Description** if desired.

5 Select the appropriate **User Group**.

The **User Group** selected sets the level of access that the user has within the system. Users are normally grouped as clinical users or system administrators.



6 Click **Save** to save the new user's details.



7 To delete a user, select the user in the list, click **Delete** and then confirm that you want to delete the user account.

13.3.2 Resetting a User's Password

As a system administrator, you can reset a user's password.

You can reset a user's password in the **System Logon** dialog panel. For information about changing your own password, see *Changing Your Password* (page 215).

1 Select the user in the **User Accounts** list.

The user's details are displayed in the **Details** section.



2 Click **Reset Password**.

A dialog box is displayed.

3 Enter a **New Password**.

You must follow these rules when setting a password:
- The password field cannot be empty.
- Passwords cannot contain user names.
- Passwords must conform to the password policy settings (see *Managing Users and System Logon* (page 233)).
- If password complexity is enabled, passwords must contain characters from three of the following categories:
  - Uppercase letters
  - Lower case letters
  - Numbers (0 through 9)
  - Non-alphabetic characters (for example: ! $ # %)

4 Enter the same password in **Confirm Password**.

NOTE ***The password entered in Confirm Password must match the password entered in New Password.***

5 Do one of the following:

a To close the dialog box without resetting the user's password, click **Cancel**.

b To close the dialog box and reset the user's password, click **Apply**.

13.4 Changing General Patient and Workflow Settings

You can customize general workflow settings and specify sizes for the different patient types.

If the system local storage is full, the system automatically deletes data that is not protected to make space available for newly acquired images. You can configure the system to protect every study upon completion.

You can configure the system to automatically start procedures that have been provided from XperIM.

You can simplify the DICOM workflow to automatically mark all procedures as completed, and to automatically produce a dose report when a procedure is closed.

You can change these basic patient and workflow settings:
- Preventing automatic study deletion
- Enabling a simplified DICOM workflow
- Enabling automatic dose reporting
- Neonatal, infant and child age limits
- Adult circumference limits
- Default patient type
- Enabling support for Chinese, Japanese, and Korean (CJK) ideographic characters
- Making the system compliant with requirements from the United States Department of Veterans Affairs (VA)



1 On the **System** menu, click **Customization** to display the **System Customization** window.

2 In the **General** settings group, click **Workflow**.

3 To protect every study upon completion, select the **Prevent Automatic Study Deletion** check box.

You can allow an individual study to be deleted by manually removing the protection for that study. For more information about protecting and unprotecting studies, see *Protecting and Unprotecting Studies* (page 122).

4 To automatically mark procedures as completed when closed, select the **Simplified DICOM Workflow** check box.

5 To enable automatic dose reporting when a procedure is closed, select the **Automatic Dose Report** check box and select the type of report you want to produce.

6 Enter or change the age limits for pediatric patient types.

7 Enter or change the circumference limits for adult patient types.

NOTE ***There is no circumference limit for the largest adult patient type.***

8 To change the default patient type, select the **Default** radio button beside the desired default patient type to be used.



9 To undo any changes you have made, click **Undo Changes**.



10 To save your changes, click **Save**.

11 To close the **System Customization** window, click **Close**.

13.5 Enabling and Disabling Storage Device Export and Import

Export of data to storage devices (USB flash memory drive or CD/DVD) is enabled by default. You can disable this function if needed.

You can also change the default setting for anonymizing patient data for export to a USB flash memory drive or to CD/DVD.

You can also include a DICOM viewing application on the storage device with the patient data.



1 On the **System** menu, click **Customization** to display the **System Customization** window.

2 In the **General** settings group, click **Workflow**.

3 To disable **Storage Device Export and Import**, select **Disabled**.

4 To automatically include a DICOM viewing application with exported patient data, select **Include DICOM Viewer**.

5 To anonymize patient data exported to a USB flash memory drive, select **Default De-Identify Upon USB Export**.

6 To anonymize patient data exported to CD/DVD, select **Default De-Identify Upon CD/DVD Export**.



7 To undo any changes you have made, click **Undo Changes**.



8 To save your changes, click **Save**.

9 To close the **System Customization** window, click **Close**.

13.6 Mapping RIS Codes to ProcedureCards

You can map the codes used in the hospital's Radiology Information System (RIS) to ProcedureCards on the system.

When you import a patient's details from a radiology information system, mapping allows you to apply the correct ProcedureCard in the Azurion system for the intended clinical procedure.

The system collects a list of all RIS codes used in scheduled procedures, or you can enter new codes manually.



1 On the **System** menu, click **Customization** to display the **System Customization** window.

2 In the **General** settings group, click **RIS Code Mapping**.

A list of RIS codes is displayed, showing the ProcedureCard that each one is mapped to. The DICOM attribute that is used for the RIS code mapping is displayed above the list.

If a RIS code is not mapped to a ProcedureCard, a warning symbol is displayed.

You can sort each column in ascending or descending order by clicking the RIS Code or Mapped ProcedureCard column heading.

3 To use an alternative DICOM attribute for the RIS code mapping, click the arrow in the **DICOM Mapping Attribute** box and select an attribute.

4 To add a new RIS code, do the following:



a Click **New**.

A new RIS code called **New RIS Code** is added to the list.

b Select the new RIS code and enter the correct RIS code in the **RIS Code Details** box.



c Click **Save** to save the new RIS code.

5 Select the RIS code to be mapped.

The RIS code details are displayed.

6 Select the ProcedureCard group from the **Cards Group** drop-down list.

The ProcedureCards relating to the selected group are displayed.

7 Select the ProcedureCard you want to map to the RIS code.



8 To undo any changes you have made, click **Undo Changes**.



9 To save your changes, click **Save**.

10 To close the **System Customization** window, click **Close**.

13.7 DICOM Settings

You can customize the system's DICOM settings.

DICOM Settings are available in **General** settings group for the following items:

- Local system
- Worklist and MPPS

- Remote systems
- DICOM Printers

13.7.1 Configuring Local Settings

You can configure DICOM settings for the local system and enable the use of secure communication.

You can configure these local DICOM settings using the **DICOM Settings** menu.

The following items are read-only and cannot be changed:
- IP address
- Default gateway IP address



1 On the **System** menu, click **Customization** to display the **System Customization** window.

2 In the **General** settings group, click **DICOM Settings**.

The **Local System** tab is displayed by default.

3 To change the Application Entity Title, enter a new title in the **AE Title** field.

4 To change the port number in use, enter a new port number in the **Port Number** field.

5 To configure secure communication, click **Advanced Settings** and continue with the task in *Configuring Secure Communication on the Local System* (page 238).



6 To undo any changes you have made, click **Undo Changes**.



7 To save your changes, click **Save**.

8 To close the **System Customization** window, click **Close**.

Configuring Secure Communication on the Local System

You can configure secure communication and manage certificates from trusted certification authorities.

You can import and delete certificates, and choose which local system certificate to use for secure communications.

1 If the **Local System** tab is not already displayed, do the following:



a On the **System** menu, click **Customization** to display the **System Customization** window.

b In the **General** settings group, click **DICOM Settings**.

2 Click **Advanced Settings**.

The **Advanced DICOM Settings** dialog box is displayed.

3 To enable secure communication, select **Use Authentication**.

4 To enable the use of encryption, select **Use Encryption**.

This option is only available if **Use Authentication** is selected.

NOTE ***For correct implementation of secure communication between the local system and remote systems, ensure that the secure communication settings are configured in the same way on the local system and the remote systems. If the settings do not match, import and export jobs between the local system and a remote system may fail.***

5 To change the certificate used for secure communications:

a Select the certificate to be used, in the **Local System Certificates** list.

If a certificate has expired, a warning is displayed for the certificate in the list. You cannot use an expired certificate.



b Click **Use in Secure Communication**.

6 To import a certificate:



a Click **Import** in the **Local System Certificates** list or in the **Trusted Certification Authorities Certificates** list.

The Import Certificate dialog panel is displayed.

b Select the certificate file to be imported.

c Click **Cancel** to close the dialog panel without importing a certificate.

d Click **Import** to import the selected certificate.

7 To delete a certificate:

a Select the certificate to be deleted.



b Click **Delete**.

c Confirm that you want to delete the certificate.



8 To undo any changes you have made, click **Undo Changes**.



9 To save your changes, click **Save**.

10 To close the **Advanced DICOM Settings** dialog box, click **Close**.

11 To close the **System Customization** window, click **Close**.

13.7.2 Configuring Worklist Management and the Modality Performed Procedure Step (MPPS) Manager

You can enable or disable worklist management and the MPPS manager.



1 On the **System** menu, click **Customization** to display the **System Customization** window.

2 In the **General** settings group, click **DICOM Settings**.

The **Local System** tab is displayed by default.

3 Select the **WLM/MPPS** tab.

4 To enable worklist management, select **Enabled** in the **Worklist Management** section.

5 To enable the MPPS manager, select **Enabled** in the **Modality Performed Procedure Step Manager** section.

6 Enter the following mandatory information for worklist management and for the MPPS manager:

- **AE Title**
- **Host Name or IP Address**
- **Port Number**

7 Select the time period to be used for automatic querying of scheduled procedures.

8 To enable secure communication, select **Use Authentication**.

9 To enable the use of encryption, select **Use Encryption**.

This option is only available if **Use Authentication** is selected.



10 Click **Test Connection**.

The result of the test is indicated by an icon.

	Test successful
	Test failed

If the test fails, more information is provided.

11 To disable worklist management, select **Disabled** in the **Worklist Management** section.

12 To disable the MPPS manager, select **Disabled** in the **Modality Performed Procedure Step Manager** section.



13 To undo any changes you have made, click **Undo Changes**.



14 To save your changes, click **Save**.

15 To close the **System Customization** window, click **Close**.

13.7.3 Configuring Remote Systems

You can configure the settings for other DICOM-compatible systems connected to the same hospital network as the Azurion system.



1 On the **System** menu, click **Customization** to display the **System Customization** window.

2 In the **General** settings group, click **DICOM Settings**.

3 Click the **Remote Systems** tab.

A list of remote systems is displayed (DICOM nodes).

4 To view the settings that are configured for an existing remote system, select a system in the list.

The **Remote System Settings** and **Services** settings are displayed, providing information about the selected remote system and the services it supports.



5 To add a new remote system, click **Add** below the list of remote systems.

A new remote system is added to the list. You can now configure the settings of the new system.

6 To configure a system's settings in the **Remote System Settings** section, select the system in the list and do the following:

a Enter the **Name** of the remote system.

b Click the **Template Type** box and select a template.

The template defines the services that available on the remote system. Available services are indicated with a selected check box in the **Services** section.

c To enable secure communication, select **Use Authentication**.

d To enable the use of encryption, select **Use Encryption**.

This option is only available if **Use Authentication** is selected.

NOTE ***For correct implementation of secure communication between the local system and remote systems, ensure that the secure communication settings are configured in the same way on the local system and the remote systems. If the settings do not match, import and export jobs between the local system and a remote system may fail.***

7 To configure the services of the selected remote system in the **Services** section, do the following:

a Select a service in the **Service** list.

b Configure the service's settings as desired

- **AE Title**
- **Host Name or IP Address**
- **Port Number**
- **DICOM Presentation State Support**
- **JPEG Compression**
- **Monitor Type**



8 To test the configuration of a remote system, click **Test Connection**.

The connection to the system is tested and the result is displayed in the remote systems list next to the system name.

a If a test fails, click **Status Details** to display more information about the test result.



9 To test all remote system connections, click **Test All** below the list of remote systems.



10 To remove a remote system, click **Remove** and confirm that you want to remove the system.



11 To undo any changes you have made, click **Undo Changes**.



12 To save your changes, click **Save**.

13 To close the **System Customization** window, click **Close**.

13.7.4 Configuring DICOM Printers

You can add, reconfigure, test, calibrate, and remove DICOM printers that are connected to the system's network.



1 On the **System** menu, click **Customization** to display the **System Customization** window.

2 In the **General** settings group, click **DICOM Settings**.

The **Local System** tab is displayed by default.

3 Select the **DICOM Printers** tab.

A list of DICOM printers is displayed.

The printer list can be sorted by clicking on the column headings to sort each column in ascending or descending order.

4 To reconfigure an existing printer, perform the following procedure:

a Select the desired printer in the list.

The settings for the selected printer are displayed in the **Printer Settings** section.

b Change the desired printer setting in the **Printer Settings** section.

5 To add a new printer, perform the following procedure:



a Click **Add**.

A new printer is added to the list.

b Select the new printer.

c Enter the **Printer Settings** for the new printer.

d To enable secure communication, select **Use Authentication**.

e To enable the use of encryption, select **Use Encryption**.

This option is only available if **Use Authentication** is selected.



f Click **Save** to save your changes.



6 To test an individual printer's connection, click **Test Connection**.

The connection to the printer is tested and the result is displayed in the printer list next to the printer name.

The result of the test is indicated by an icon.

	Test successful
	Test failed



7 To test all printer connections, click **Test All**.

8 To calibrate a printer, click **Printer Calibration**.



9 To remove a printer, click **Remove** and confirm that you want to remove the printer.



10 To undo any changes you have made, click **Undo Changes**.



11 To save your changes, click **Save**.

12 To close the **System Customization** window, click **Close**.

13.8 Configuring Export Protocols

You can configure how and when the system exports images by configuring the export protocols.

An export protocol specifies whether an export occurs automatically or manually, what format the images will be, and where they will be exported to.

You can edit, copy and delete an existing export protocol, or create a new one.

When editing or creating a protocol, you can configure the following options:

- Manual or automatic export
- Protocol name

- Default destination
- Field of view, size and quality
- When automatic exports occur
- What images are automatically exported



1 On the **System** menu, click **Customization** to display the **System Customization** window.

2 In the **General** settings group, click **Export Protocols**.

3 To change the default protocol:

a Select the desired protocol in the list.



b Click **Set as Default**.

4 To add a new protocol:



a Click **New**.

A new protocol is added to the list with the name **New export protocol**.

b Select the new export protocol in the list.

c Edit the **Export Protocol Details**.

The following settings are recommended:

Settings	Options	Notes
Processing Format	**Processed** (Recommended)	Default option. Image processing is applied to the image before export.
	Unprocessed	The image is not processed. Processing parameters are described in private DICOM attributes (only IntelliSpace Portal can handle this correctly). Select **Unprocessed** only for export to IntelliSpace Portal or to a workstation where measurements are performed on image data (for example, quantitative analysis).
Image Size	**Do Not Downscale** (Recommended for vascular images)	Default option
	1024x1024	The resolution is limited to $1k^2$. This has no impact on cardio images.
	512x512	The resolution is limited to 512^2. The file size is reduced.
Image Quality	**Normal** 8 bits/pixel	The file size is reduced.
	High 12 bits/pixel (Recommended)	The file size is twice as large as **Normal** image quality.



d Click **Save** to save the new protocol details.

5 To add a new protocol based on an existing protocol:

a Select the desired protocol in the list.



b Click **Copy the selected export protocol**.

c Edit the **Export Protocol Details**.

The following settings are recommended:

Settings	Options	Notes
Processing Format	**Processed** (Recommended)	Default option. Image processing is applied to the image before export.
	Unprocessed	The image is not processed. Processing parameters are described in private DICOM attributes (only IntelliSpace Portal can handle this correctly). Select **Unprocessed** only for export to IntelliSpace Portal or to a workstation where measurements are performed on image data (for example, quantitative analysis).
Image Size	**Do Not Downscale** (Recommended for vascular images)	Default option
	1024x1024	The resolution is limited to $1k^2$. This has no impact on cardio images.
	512x512	The resolution is limited to 512^2. The file size is reduced.
Image Quality	**Normal** 8 bits/pixel	The file size is reduced.
	High 12 bits/pixel (Recommended)	The file size is twice as large as **Normal** image quality.



d Click **Save** to save the new protocol details.

6 To edit an existing protocol:

a Select the desired protocol in the list.

b Edit the **Export Protocol Details**.

NOTE ***If the export protocol has no default destination specified, a warning symbol is displayed in the list.***



c Click **Save** to save the new protocol details.

7 To delete a protocol:

a Select the desired protocol in the list.



b Click **Delete the selected export protocol**.

c Confirm that you want to delete the protocol.



8 To undo any changes you have made, click **Undo Changes**.



9 To save your changes, click **Save**.

10 To close the **System Customization** window, click **Close**.

13.9 Configuring Automatic Data Transfer

You can configure what types of images and data are exported automatically, and what format is used.

For each X-ray protocol, you can specify how you want the system to manage the automatic transfer of image data, by selecting the export protocols to use.

For non-X-ray image data (snapshots, analysis reports, and dose reports), you can select the destination for data based on the data type or the X-ray protocol used to acquire it.



1 On the **System** menu, click **Customization** to display the **System Customization** window.

2 In the **General** settings group, click **Automatic Data Transfer**.

The **X-ray Image Data** tab is displayed by default.

3 Select the desired X-ray protocol.

4 Select the export protocol to use for each image type.

5 Set the non X-ray image preferences using the following procedure:

a Select the **Non X-ray Image Data** tab.

b Select the export protocol to use for each data type.



6 To undo any changes you have made, click **Undo Changes**.



7 To save your changes, click **Save**.

8 To close the **System Customization** window, click **Close**.

13.10 Network Configuration

You can configure standard network settings on the system.



1 On the **System** menu, click **Customization** to display the **System Customization** window.

2 In the **General** settings group, click **Network Configuration**.

In the **Network Configuration** panel, the current network status of the system is displayed in the **Network Adapter** section. You can **Disable** or **Enable** the network adapter as desired.

3 To set the IP address settings of the system, click the **IPv4 Settings** tab or the **IPv6 Settings** tab, depending on the networking protocol in use, and configure the IP address settings according to the requirements of your network.

If you are unsure of how to configure these settings, contact your network administrator.

4 Configure the **DNS Settings** according to the requirements of your network.

If you are unsure of how to configure these settings, contact your network administrator.

The network configuration of the system is displayed in the **Network Details** panel. If you have made changes to the network configuration, click **Refresh** to display the latest settings.



5 To undo any changes you have made, click **Undo Changes**.



6 To save your changes, click **Save**.

7 To close the **System Customization** window, click **Close**.

13.11 Enabling or Disabling Remote Support

You can enable remote support to allow technical support to monitor the system, or you can disable this service to prevent remote monitoring.



1 On the **System** menu, click **Customization** to display the **System Customization** window.

2 In the **General** settings group, click **Remote Support**.

3 To enable remote support, select **Enabled** in the **Remote Support** panel.

When remote support is enabled, technical support can remotely track the system.

a Select any of the following support options:

- **Allow the system to send diagnostic data**: This option sends diagnostic data and alerts to technical support.
- **Allow Remote Assistance**: This option allows technical support to provide remote assistance by screen sharing. You retain the ability to stop screen sharing if desired.
- **Allow the system to receive and install software updates**: This options allows the system to download updates automatically for installation by technical support or by a hospital administrator.

4 To disable remote support, select **Disabled**.



5 To undo any changes you have made, click **Undo Changes**.



6 To save your changes, click **Save**.

7 To close the **System Customization** window, click **Close**.

13.12 Managing ProcedureCards

You can create, edit, copy, move, and delete ProcedureCards to suit the studies you are performing.

A ProcedureCard is a predefined collection of settings that you can associate with a study. When you schedule a study, you can choose which ProcedureCard is used and this will provide the system settings used for the study.

You can manage ProcedureCards within the system, allowing you to create, edit and organize the ProcedureCards to suit how you use the system.

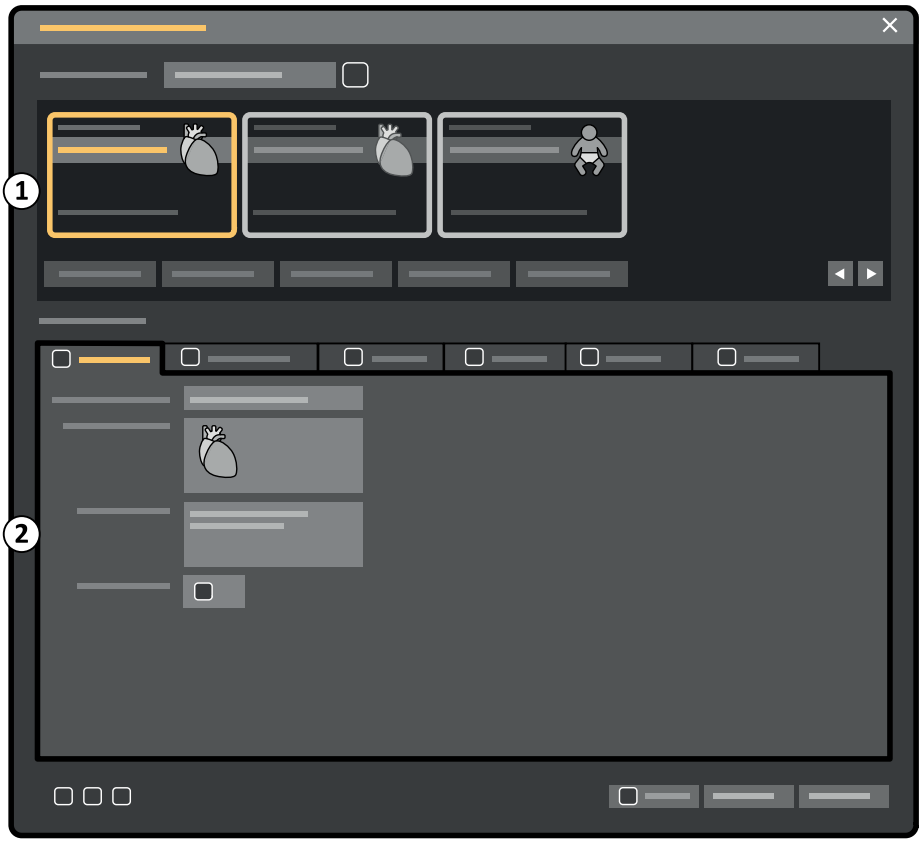

Figure 124 ProcedureCards Manager

Legend	
1	ProcedureCard selection area
2	ProcedureCard details

13.12.1 Changing the Default ProcedureCard

You can change the default ProcedureCard used for studies.

For more information on ProcedureCards, see *ProcedureCards* (page 50).

1 In the review window, click **System** and select **Manage ProcedureCards**.

The **ProcedureCards Manager** is displayed.

2 Select the **ProcedureCard Group** containing the desired ProcedureCard.

3 Select the desired ProcedureCard.

4 Click **Set as Default**.

The selected ProcedureCard is now the default ProcedureCard.

5 Click **OK** to close the **ProcedureCards Manager**.

13.12.2 Creating a New ProcedureCard

You can create new ProcedureCards for use with studies.

You can also create a new ProcedureCard by copying an existing ProcedureCard and changing the settings.



1 In the review window, click **System** and select **Manage ProcedureCards**.

The **ProcedureCards Manager** is displayed.

2 Select the **ProcedureCard Group** that you want to place the new ProcedureCard in.

3 Create a new ProcedureCard by doing one of the following:



- Click **New**.
- Copy an existing ProcedureCard.

For more information about copying a ProcedureCard, see *Copying a ProcedureCard* (page 249).

A new ProcedureCard with the default title **My ProcedureCard** is created and is visible in the list. You can edit this new ProcedureCard to apply the desired settings. For more information about editing ProcedureCards, see *Editing a ProcedureCard* (page 248).

13.12.3 Editing a ProcedureCard

You can edit the settings of a ProcedureCard.

The changes you make will affect all scheduled studies that have this ProcedureCard selected.



1 In the review window, click **System** and select **Manage ProcedureCards**.

The **ProcedureCards Manager** is displayed.

2 Select the **ProcedureCard Group** containing the desired ProcedureCard.

3 Select the desired ProcedureCard.

4 To edit general ProcedureCard information, do the following:



a Select the **General** tab.

b Edit the general ProcedureCard information as desired.

5 To edit the available X-ray settings, do the following:



a Select the **X-ray Acquisition** tab.

b Select the X-ray protocols available for use with the ProcedureCard.



c Set the default X-ray protocol for the ProcedureCard.

d Reorder the X-ray protocols as desired.



6 To change the preset screen layout used for FlexSpot, do the following:



a Select the **FlexSpot** tab.

b Change the preset group by selecting a new group from the list.

c Select the new preset to use.

7 To change the preset screen layout used for FlexVision, do the following:



a Select the **FlexVision** tab.

b Change the preset group by selecting a new group from the list.

c Select the new preset to use.

8 To edit the instructions included with the ProcedureCard, do the following:



a Select the **Instructions** tab.



b To rename an existing document, click **Rename the selected bookmark**, enter a new name and click **OK**.



c To preview an existing document, select the document and click **View the selected bookmark**.

The document is displayed in a viewer.



d To delete a document from the ProcedureCard, select the document and click **Delete**.

9 To include new external documents for the ProcedureCard, do the following:



a Select the **Instructions** tab.



b Click **Add External**.

The **XPS documents library** list is displayed, showing previously uploaded documents and a preview window.

c To preview a document, select it in the **XPS documents library**.

d To add a document which has been previously uploaded, select the document and click **Add**.



e To upload a new document from a USB flash memory drive, click **Import from USB** and select the document you want to import, then click **Add**.

f To delete a document, select it and click **Delete**.

g To close the dialog box without adding a document, click **Cancel**.

10 To check all settings in the ProcedureCard, do the following:



a Select the **Summary** tab.

b Check the settings displayed for each section.



11 To save your changes, click **Save**.

12 To close the **ProcedureCards Manager** without saving your changes, click **Cancel**.

13.12.4 Copying a ProcedureCard

You can copy a ProcedureCard to use as the basis for a new ProcedureCard.

ProcedureCards are copied within the same ProcedureCard Group. You can move a copied ProcedureCard to another ProcedureCard group. For more information about moving ProcedureCards, see *Moving a ProcedureCard* (page 250).



1 In the review window, click **System** and select **Manage ProcedureCards**.

The **ProcedureCards Manager** is displayed.

2 Select the **ProcedureCard Group** containing the desired ProcedureCard.

3 Select the desired ProcedureCard.

4 Click **Copy**.

The ProcedureCard is copied within the same ProcedureCard group and is saved with the same name and marked as a copy.

13.12.5 Moving a ProcedureCard

You can move a ProcedureCard to another ProcedureCard group.

For example, you can copy a ProcedureCard and then move the copy to another group. For more information about copying ProcedureCards, see *Copying a ProcedureCard* (page 249).



1 In the review window, click **System** and select **Manage ProcedureCards**.

The **ProcedureCards Manager** is displayed.

2 Select the **ProcedureCard Group** containing the desired ProcedureCard.

3 Select the desired ProcedureCard.



4 Click **Move To...**.

A dialog box is displayed where you can choose which group you want to move the ProcedureCard to.

5 Select the desired group from the list.

6 Click **OK**.

The ProcedureCard is moved to the selected group.

13.12.6 Deleting a ProcedureCard

You can delete a ProcedureCard so that it is no longer displayed in the list of available cards.

If you delete a ProcedureCard which is selected for use in a scheduled study, the study will use the default ProcedureCard.



1 In the review window, click **System** and select **Manage ProcedureCards**.

The **ProcedureCards Manager** is displayed.

2 Select the **ProcedureCard Group** containing the desired ProcedureCard.

3 Select the desired ProcedureCard.



4 Click **Delete**.

A confirmation message is displayed asking you to confirm that you want to delete the ProcedureCard.

5 To delete the ProcedureCard, click **Delete**.

6 To close the confirmation message without deleting the ProcedureCard, click **Cancel**.

13.12.7 Managing ProcedureCard Groups

You can create, rename, reorder, and delete ProcedureCard groups.

ProcedureCards are organized into groups allowing you to choose which group to add a ProcedureCard to.



1 In the review window, click **System** and select **Manage ProcedureCards**.

The **ProcedureCards Manager** is displayed.



2 Click **Edit ProcedureCard groups**.

The **Edit ProcedureCard Groups** dialog box is displayed.

3 To create a new ProcedureCards group, do the following:



a Click **New**.

A dialog box is displayed.

b Enter a name for the new group.

c To save the new group, click **OK**.

d To close the dialog box without saving the new group, click **Cancel**.

4 To rename a ProcedureCards group, do the following:

a Select the desired group in the list.



b Click **Rename**.

A dialog box is displayed.

c Enter a new name for the group.

d To save the new group name, click **OK**.

e To close the dialog box without saving the new group name, click **Cancel**.

5 To delete a ProcedureCard group, do the following:

a Select the desired group in the list.



b Click **Delete**.

A confirmation message is displayed.

c To delete the group, click **OK**.

d To close the confirmation message without deleting the group, click **Cancel**.

6 To reorder the groups in the list, do the following:

a Select the ProcedureCard you want to move.

b Click the arrows to move the ProcedureCard up and down within the list.



7 Click **OK** to close the dialog box.

13.12.8 Importing, Exporting and Restoring ProcedureCards

You can import and export ProcedureCards from storage devices like a USB flash memory drive, or from a network location.

You can also restore the factory default ProcedureCard set.

NOTE ***When you import or restore ProcedureCards, all currently available ProcedureCards are deleted and replaced by the imported or restored set of ProcedureCards. Before you import or restore ProcedureCards, you should consider exporting the existing set of ProcedureCards so you can import them later if you need to.***



1 In the review window, click **System** and select **Manage ProcedureCards**.

The **ProcedureCards Manager** is displayed.

2 To export ProcedureCards from the system, do the following:



a Click **Export ProcedureCards**.

A dialog box is displayed allowing you to select the folder you want to export ProcedureCards to.

b Click **Browse**, select the folder you want to use and click **OK**.

c Enter a name for the set of ProcedureCards you are exporting.

d To close the dialog box without exporting the ProcedureCards, click **Cancel**.

e To export the ProcedureCards from the selected folder, click **Export**.

3 To import ProcedureCards to the system, do the following:



a Click **Import ProcedureCards**.

A dialog box is displayed allowing you to select the folder you want to import ProcedureCards from.

b Click **Browse**, select the folder containing the ProcedureCards and click **OK**.

c To close the dialog box without importing the ProcedureCards, click **Cancel**.

d To import the ProcedureCards from the selected folder, click **Import**.

NOTE ***All currently available ProcedureCards are deleted and replaced by the imported ProcedureCards.***

4 To restore the factory default ProcedureCard set, do the following:



a Click **Restore the factory default ProcedureCards**.

A dialog box is displayed asking you to confirm that you want to restore the factory default ProcedureCard set.

NOTE ***All currently available ProcedureCards are deleted and replaced by the factory default ProcedureCards.***

b To close the dialog box without restoring the factory default ProcedureCards, click **Cancel**.

c To restore the factory default ProcedureCard set, click **Restore Defaults**.

13.13 Exporting Settings

You can save system customization settings to allow you to import them later.

NOTE ***Before you make changes to system customization settings, you should consider exporting the existing settings so you can import them later if you need to.***



1 On the **System** menu, click **Customization** to display the **System Customization** window.



2 Click **Export Settings**.

3 Click **Browse** and select the directory for the settings to be saved to.

4 Enter a name for the export file.

5 To export the settings, click **OK**.

6 To close the **System Customization** window, click **Close**.

13.14 Importing Settings

You can import previous system customization settings that have been saved.

You can choose which settings to import from an import file to ensure you only import the settings you need.



1 On the **System** menu, click **Customization** to display the **System Customization** window.



2 Click **Import Settings**.

A dialog box is displayed allowing you to select the file you want to import settings from, and which settings you want to import.

3 Do one of the following:
- Select the directory that you want to **Import Settings From**.
- Click **Browse**, select the directory that you want to use and click **OK**.

4 Select the check boxes for each of the settings you want to import.

NOTE ***The settings you select are imported from the file you have chosen, and will replace the current settings. This might cause some functionality to be unavailable after importing. To resolve any inconsistencies, update the detailed settings of the DICOM settings, export settings, and automatic data transfer settings.***

5 To import the selected settings, click **Import**.

6 To close the **System Customization** window, click **Close**.

13.15 Restoring Factory Default Settings

You can restore the system's settings to the factory default settings, if required.

You can choose which settings are be restored, allowing you to retain some customized settings.

NOTE ***Before you restore the factory default settings, you should consider exporting the existing settings so you can import them later if you need to.***



1 On the **System** menu, click **Customization** to display the **System Customization** window.



2 Click **Restore Factory Default Settings**.

The **Restore Factory Default Settings** dialog panel is displayed allowing you to select the settings that you want to restore to factory default settings.

3 Select the check box for each of the settings that you want to restore.

NOTE ***The settings that you select will be restored to the factory default settings, replacing the current settings. This might cause some functionality to be unavailable.***

4 To close the dialog box without restoring the settings to the factory defaults, click **Cancel**.

5 To restore the selected settings to the factory default settings, click **Restore Defaults**.

6 To close the **System Customization** window, click **Close**.

14 Maintenance

This product requires proper operation, planned maintenance, and checks that the user must perform routinely. These tasks are essential to keep the product operating safely, effectively, and reliably.

WARNING
Maintenance of the system by persons without appropriate training, or using unapproved spare parts, accessories, or detachable parts, may void the manufacturer's warranty. Such maintenance carries serious risk of personal injury and damage to the system.

Clinical application is not allowed during preventive maintenance and service.

NOTE ***The assembly of medical electrical systems and modifications during the actual service life, require evaluation to the requirements of IEC 60601-1.***

14.1 Cleaning and Disinfecting

Insufficient cleaning of residues that remain on the equipment after procedures may lead to patient infection from polluted parts. Ensure that the system is thoroughly and extensively cleaned after each intervention.

When cleaning and disinfecting the system, follow these general guidelines:

- Use sterile covers to prevent pollution or contamination of the equipment.
- Do not allow liquids to enter the system. This may cause corrosion or electrical damage.
- Do not apply cleaning liquid or spray directly onto the system. Always use a cloth dampened with the cleaning product.
- Switch the system off prior to cleaning and disinfecting to avoid electric shock or accidental activation of X-ray. Be aware that even when the system is switched off, live voltages may still be present on some interfaces.
- The patient straps and ratchet compressor band should be laundered instead of subjected to surface disinfection.
- Do not use corrosive or abrasive agents or pads.
- Some cleaning agents or disinfection agents may cause discoloration.
- When cleaning scratched or worn painted surfaces, it is to be expected that some additional paint is removed.
- Before cleaning the mattress, close the air plug to prevent liquids from entering. After cleaning the mattress, open the air plug to allow the mattress to expand and contract properly when the patient is positioned on it.

NOTE ***You should always comply with local instructions, regulations, and guidelines concerning hygiene.***

These cleaning and disinfecting instructions only apply to the X-ray system and do not apply to other equipment in the room. Cleaning instructions for other equipment are described in the accompanying documents of the equipment. If cleaning or disinfecting is needed at the interface of third-party equipment with the X-ray system, dismount the equipment before cleaning or disinfecting. You should also dismount third-party equipment if you need to clean or disinfect it with agents that are not compatible with the X-ray system.

NOTE ***Always follow the manufacturer's instructions for the cleaning agents or disinfectants that you use.***

Cleaning

Clean the system as needed with a damp cloth and a detergent solution to remove all visible residues. Scrubbing with a soft bristle brush, such as a toothbrush, may be necessary to reach corners or to remove material that has dried onto the surface.

NOTE ***When cleaning in the vicinity of the X-ray equipment of an OR system, you should leave the non-sterile covers attached.***

Disinfecting

Disinfection may not be effective if the surfaces are not thoroughly cleaned first. Ensure that all surfaces are cleaned and residues of cleaning agents are removed with water.

To ensure the effectiveness of disinfection, always follow the instructions of the disinfection product used.

After disinfecting, ensure that no residue disinfection agent remains on the equipment.

It is recommended that any disinfection product is first tested on small areas of the system that are not visible to verify compatibility.

Disinfectant Agents

You can disinfect the system parts and accessories in the examination room using cleaning agents consisting of the following disinfectant compounds (note the exceptions that follow this list). These compounds have been tested for compatibility with the system:

- Ethyl or isopropyl alcohol (95%)
- Quaternary ammonium (300 ppm)
- Glutaraldehyde (2%)
- Ortho-phthalaldehyde (0.55%)
- Hydrogen peroxide (5%)
- Chlorhexidine (0.5%) in ethanol or isopropyl alcohol (70%)
- Sodium hypochlorite (500 ppm)

Be aware of the following exceptions:

- The cover of the mattress is not resistant to chlorine-based detergents.
- The cover of the table tilt movement is not resistant to alcohol-based disinfectants.
- The cover of the MCS frame is not resistant to alcohol based disinfectants.

The following active compounds may not be used:

- Products containing phenol-based components, such as ortho-phenylphenol, ortho-benzyl-para-chlorophenol, or chloroxylenol.
- Products containing fluids such as ether, white spirit, turpentine, trichloroethylene, and perchlorethylene.

The safety data sheets of a disinfectant product provide detailed information on its composition. These data sheets can be obtained from the manufacturer of the product.

Using Disinfectant Sprays

Disinfecting a medical equipment room using disinfectant sprays is not recommended. Vapor can penetrate the equipment causing corrosion or electrical damage. However, if you do use disinfectant sprays in the vicinity of the X-ray equipment, follow this guidance:

- Do not use flammable or potentially explosive disinfectant sprays. The resulting vapor could ignite, causing injury to staff or damage to equipment.
- If you intend to use non-flammable, non-explosive disinfectant sprays, first switch off the equipment and allow it to cool down. This prevents convection currents drawing disinfectant vapor into the equipment.

- You must cover the equipment thoroughly with plastic sheeting before using disinfectant sprays.
- When all traces of disinfectant vapor have dispersed, you can remove the plastic sheeting and disinfect the equipment in the recommended way.

14.1.1 Cleaning the Ceiling Rails

The ceiling rails should be cleaned according to the planned maintenance program to prevent dust and debris from being released from the rails and polluting the air flow around the table. Polluted air and contaminated parts of the X-ray system may infect the patient.

1 Clean the ceiling rail track to remove dirt.

Insufficient cleaning may result in clots of dirt that degrade the performance of longitudinal movements.

2 When present, check the fixation of the longitudinal brake strip and clean the strip with alcohol.

14.2 Removing and Replacing the Anti-Scatter Grid

This procedure provides guidance for removing and replacing the anti-scatter grid.

To prevent damage to the grid, observe the following guidance:
- Do not drop the grid.
- Do not apply excessive force to the grid.
- Do not use the grid to carry objects.
- Do not expose the grid to temperatures above 40°C (104°F).
- Do not store the grid in direct sunlight or near heat sources such as heaters or cooling fan outlets.
- Do not store the grid in cabinets with heat dissipating components.
- Do not sterilize the grid, or immerse it in water.
- Do not expose the grid to steam cleaners.

14.2.1 Removing the Anti-Scatter Grid

Take care to avoid damaging either the detector or the anti-scatter grid during the following procedure.

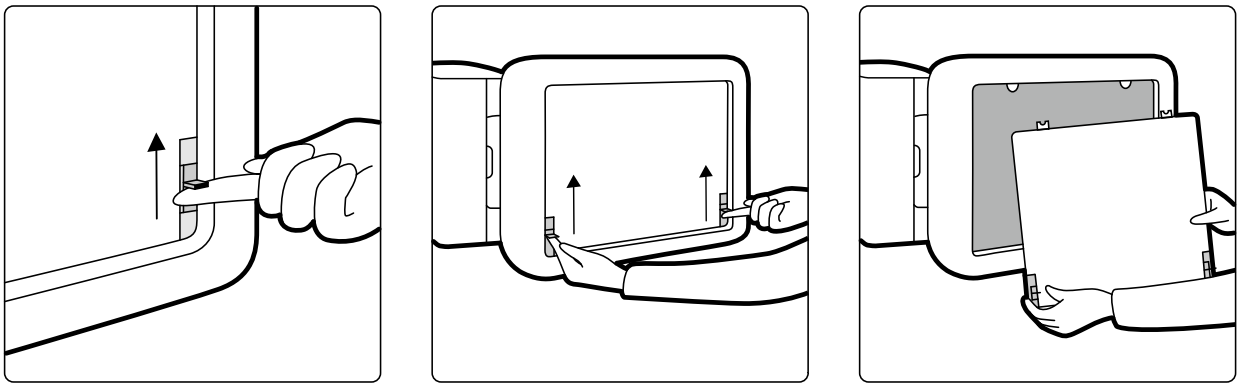

Figure 125 Removing the anti-scatter grid

1 Rotate the C-arm to the lateral position shown in the figure below.

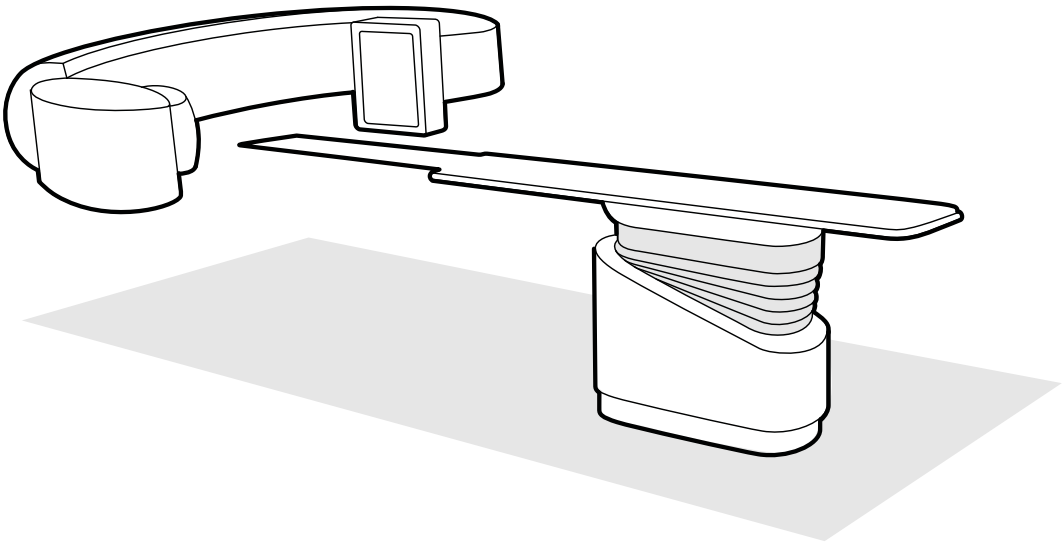

Figure 126 Positioning the detector for removal of the anti-scatter grid

2 Move the tabletop just below the detector.

3 Move the spring-loaded locking sliders toward the center of the anti-scatter grid.

4 Carefully remove the grid from the detector.

14.2.2 Replacing the Anti-Scatter Grid

Take care to avoid damaging either the detector or the anti-scatter grid during the following procedure.

NOTE ***Before replacing the anti-scatter grid, ensure that it is clean and free from debris.***

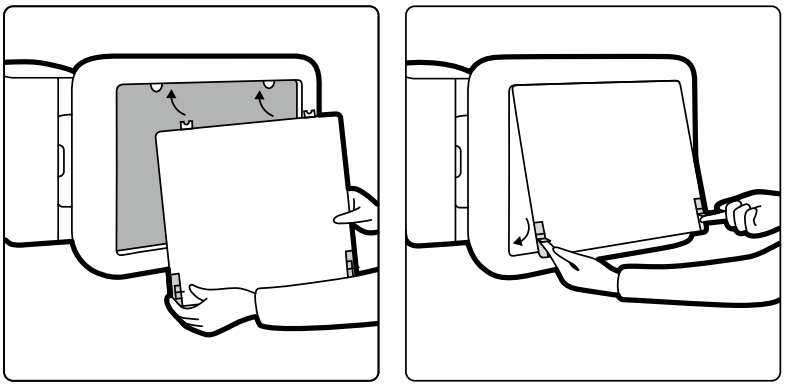

Figure 127 Replacing the anti-scatter grid

1 Insert the locating tabs on the anti-scatter grid in the corresponding slots of the detector casing.

2 Pull back the locking sliders and push the grid towards the detector until it is flush with the detector casing and release the locking sliders.

3 Ensure that the locating tabs are correctly positioned in the detector casing and the grid locking sliders are correctly engaged.

14.3 Replacing Batteries

For safe operation, you should replace the batteries in battery-operated equipment at regular intervals.

The batteries of the following items should be replaced regularly:

- Viewpad
- Wireless mouse

CAUTION
Always remove the batteries if the equipment will not be used for some time.

1 To replace the batteries, open the battery compartment cover on the rear or underside of the equipment.



2 Remove the old batteries.

NOTE ***Batteries harm the environment. Dispose of batteries responsibly.***

3 Insert new batteries of the correct type in the position indicated in the battery compartment.

The viewpad and the wireless mouse use AA batteries.

4 Replace the battery compartment cover.

14.4 Planned Maintenance Program

To ensure that maintenance is performed at the required intervals, the responsible organization should issue a request to the maintenance organization for maintenance to be carried out in accordance with the Planned Maintenance Program described in this section.

Planned maintenance may only be carried out by qualified and authorized personnel, and is comprehensively described in the service documentation. For more information, see *Safety* (page 18).

Philips Medical Systems provides a full planned maintenance and repair service on both a call basis and a contract basis. Full details are available from your Philips representative.

A summary of the planned maintenance program appears in the table below. You should always take all practical steps to make sure that the Planned Maintenance Program is fully up to date before using the product with a patient.

Philips Medical Systems will make available, on request, circuit diagrams, component part lists, descriptions, calibration instructions, or other information that will assist technical support personnel to repair those parts of the equipment that are designated by Philips Medical Systems as repairable by technical support personnel.

For a complete list of consumables, contact technical support.

Task	Frequency	Required Personnel
Check the labels	Every 6 months	User
Adjust the generators	Every 6 months	Technician
Adjust the detectors	Every year	Technician
Perform the level 1 IQ tests	Every 6 months	Technician
Replace the cooling hoses	Every 15 years	Technician
Check the coolant levels	Every year	Technician
Check the fixation of the ceiling mounted equipment	1 year after installation	Technician
Check the ceiling rails	Every year	Technician
Clean the ceiling rails	Every year	User
Perform mechanical maintenance of the frontal stand	Every year	Technician
Adjust the frontal stand	Every year	Technician
Perform mechanical maintenance of the lateral stand	Every year	Technician
Adjust the lateral stand	Every year	Technician

Task	Frequency	Required Personnel
Check the mechanical fixation of the monitor ceiling suspension	Every year	Technician
Clean the top side of the FlexMove carriage	Every year	Technician
Check the ECG and injector relays	Every year	Technician
Perform mechanical maintenance of the patient table	Every 4 years	Technician
Check the electrical safety	Every 2 years	Technician
Check the X-ray safety	Every 2 years	Technician
Check the X-ray protection devices	Every year	Technician

14.5 User Quality Control Mode

To enable X-ray dose-related constancy testing, the equipment provides a User Quality Control Mode (UQCM) to perform X-ray dose-related tests.

UQCM is intended for trained hospital radiation physicists or service engineers and comprises special user quality control procedures that are accessible by using a service dongle. This dongle is only made available by Philips Medical Systems once the user has followed the appropriate training. For more information, see *Contacting the Manufacturer* (page 388).

In case of failure of the measurements performed under UQCM, contact technical support.

14.6 User Verification Test

Perform this procedure to verify system functionality.

1 Test the collimator functions using fluoroscopy and confirm that the X-ray on indicators are on while X-ray is active.

   For more information about X-ray on indicators, see *X-ray On Indicators* (page 79).

2 Test the table and the stand movements without using X-ray.

3 Perform the following test using a user-defined phantom for constancy evaluation.

   a Position the stand in a vertical position.

   b Place the phantom on the table and in the X-ray beam.

   c For constancy evaluation, use a fixed source-to-image distance and a consistent choice for field of view.

   d Perform fluoroscopy and check whether the X-ray indications are as expected, and that the kV and mA values are within the expected ranges for the constancy evaluation.

   e Perform a digital cardiac or vascular exposure run and check whether the X-ray indications are as expected, and the kV and mA values are within the expected ranges for the constancy evaluation.

14.6.1 Automatic Exposure Control Test

1 Select a pulsed fluoroscopy X-ray protocol.



2 Close the shutters to apply full collimation.

3 Perform pulsed fluoroscopy twice and note the exposure parameters.

The kV value must reach the maximum programmed value (for example 110 kV) with no error message occurring. This test also includes a test of the grid switch at the highest kV value.

14.6.2 Beam Limitation Check

You can perform the beam limitation check as needed If it is suspected that the beam limiting device (shutters) are malfunctioning.

1 Reset the shutters.

2 Position the tabletop horizontally and adjust it to maximum height.

3 Position the stand with the X-ray beam perpendicular to the tabletop.

4 Position two lead rulers crosswise on the tabletop and use tape to attach the rulers.

5 Move the detector as close as possible to the rulers.

6 Select a field size such that the rulers span the height and width of the entire screen (see figure below).

7 Acquire a fluoroscopy image.

8 Float the tabletop to position the center of the intersection of the two lead rulers in the center of the image.

9 Acquire a fluoroscopy image and write down the ruler values (A1 to D1), corresponding to the edges of the image.

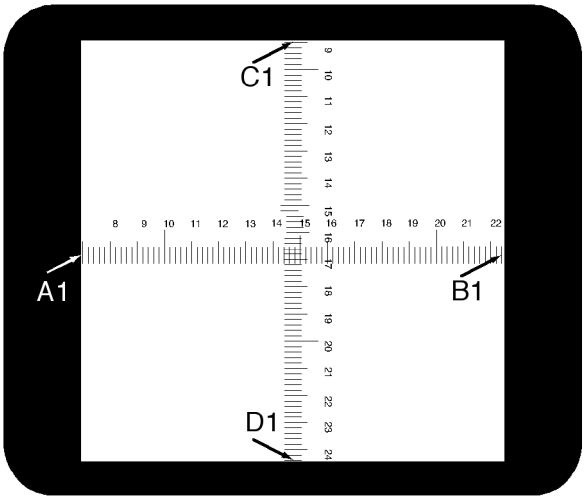

10 Position an adequately sized film cassette or digital film cassette on top of the rulers.

11 Expose the film (or digital film) by acquiring fluoroscopy.

The maximum density of the developed film should be 0.9 ± 0.1.

12 Write down the ruler values (A2 to D2).

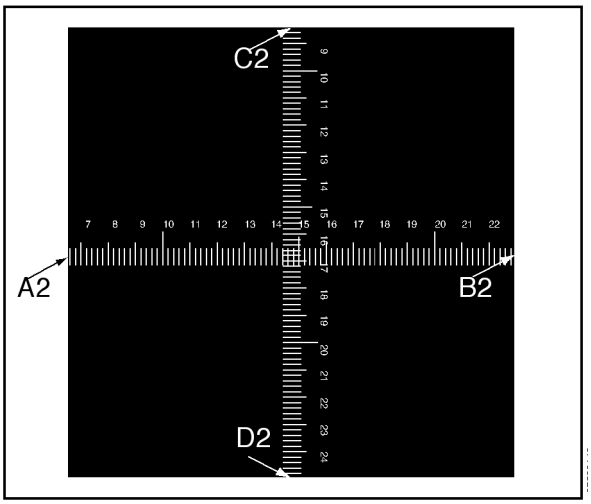

13 Determine the distance [X] in cm between the focal spot and the tabletop.

NOTE ***The position of the focal spot is indicated at the outside cover of the tube housing.***

14 For each edge (A to D) calculate the following:

(Value 2 - Value 1) ≤ X/50.

EXAMPLE

A1 = 7; A2 = 6.8 and X = 85. Therefore the formula gives:

(6.8 - 7) ≤ 85/50 = 0.2 ≤ 1.7, which is acceptable.

If any calculated value is larger than X/50, the beam limiting device is malfunctioning and you should contact technical support.

14.7 Viewing and Testing Network Connections

You can view and test the system's network connections to assist in troubleshooting.

1 To view the system's network connections, do one of the following in the review window:
- Click **System** and select **System Connectivity Overview**.
- Click the connection status icon in the notification area.

The following icons are used in the notification area to indicate the connection status:

	No connectivity problems have been detected.
	Connectivity problems have been detected.

The **Network Connections** dialog box is displayed showing a list of the system's network connections with information about each connection and its status.

2 To view the information for a network connection, select the connection in the list.

The following icons are used in the **Network Connections** dialog box to indicate the connection status:

	The connection is operational.



The connection has an error.

Information about the selected network connection is displayed below the list and includes the name and status of the connection, when the last successful connection was made and some recommendations for appropriate action you can take.

If you are a system administrator, you are shown more detailed information about each connection.

3 To test an individual connection, do the following:

a Select the desired connection in the **Network Connections** dialog box.



b Click **Test Connection**.

The status of the connection and its associated information is refreshed.

14.8 Activating the Screen Saver

For occasions when you want to blank the monitors, you can activate the screen saver.

1 Ensure all geometry movements are stopped and that X-ray is not active.

2 Click **System** in the review window and select **Activate Screen Saver**.

A dialog box is displayed requesting you to confirm that you wish to activate the screen saver.

3 Do one of the following:
- To close the dialog box without activating the screen saver, click **Cancel**.
- To activate the screen saver, click **Activate**.

The screen saver is displayed.

4 To deactivate the screen saver, move the mouse or press any key or mouse button.

14.9 Viewing Audit Logs

If you are logged on as a system administrator, you can view an audit trail of actions carried out on the system.

1 Click **System** and select **View Audit Logs**.

The **Audit Trail Viewer** is displayed showing the list of actions carried out on the system.



2 To find for a specific action in the audit log, enter text in the search field and click **Search**.

Matching search results are displayed.

3 To close the **Audit Trail Viewer**, click **Close**.

For more information about audit trail settings, see *Configuring Audit Trail Settings* (page 233).

14.10 Saving Information for Technical Support

You can save information on the system for use by technical support.

The system allows you to save the following information:
- Images
- Log files

14.10.1 Saving a Series for Technical Support

If you encounter a problem with a series, you can save it to help with technical support.

When you save a series for technical support, the system saves the series that is displayed in the review window.

1 Ensure that the series you want to save is displayed in the review window.

2 In the review window, click **System** and select **Save Image for Technical Support**.

The series is saved and is available to assist in technical support activities.

14.10.2 Saving a Log File for Technical Support

If you encounter an error or a problem in the system, you can save a log file that Technical Support can use to assist in resolving the problem.

1 In the review window, click **System** and select **Save Log File for Technical Support**.

A dialog box is displayed asking you to confirm that you want to save the log file.

2 To close the dialog box without saving the log file, click **Cancel**.

3 To save the log file, click **Save**.

The following icons are displayed in the notification area, indicating the status of the saving operation:

	The log file is being saved.
	The log file is saved (displayed for 5 seconds when saving is complete).

14.11 Enabling and Disabling Remote Assistance

You can enable and disable the remote assistance function.

1 To enable remote assistance, click **System** in the review window and select **Enable/Disable Remote Assistance**.

Remote assistance is enabled. An icon in the notification area indicates the status of the remote assistance function.

	Remote assistance is enabled but not in use.
	Remote assistance is enabled and in use.

2 To disable remote assistance, click **System** in the review window and select **Enable/Disable Remote Assistance** again.

14.12 Updating the System Software

You can download and install system software updates when they become available.

Check to ensure updates are available for your system.

If updates are available, an icon is displayed in the notification area at the bottom of the review window.

Software updates are provided as individual packages which you can download and install separately. You do this using the **Software Updates** dialog box.

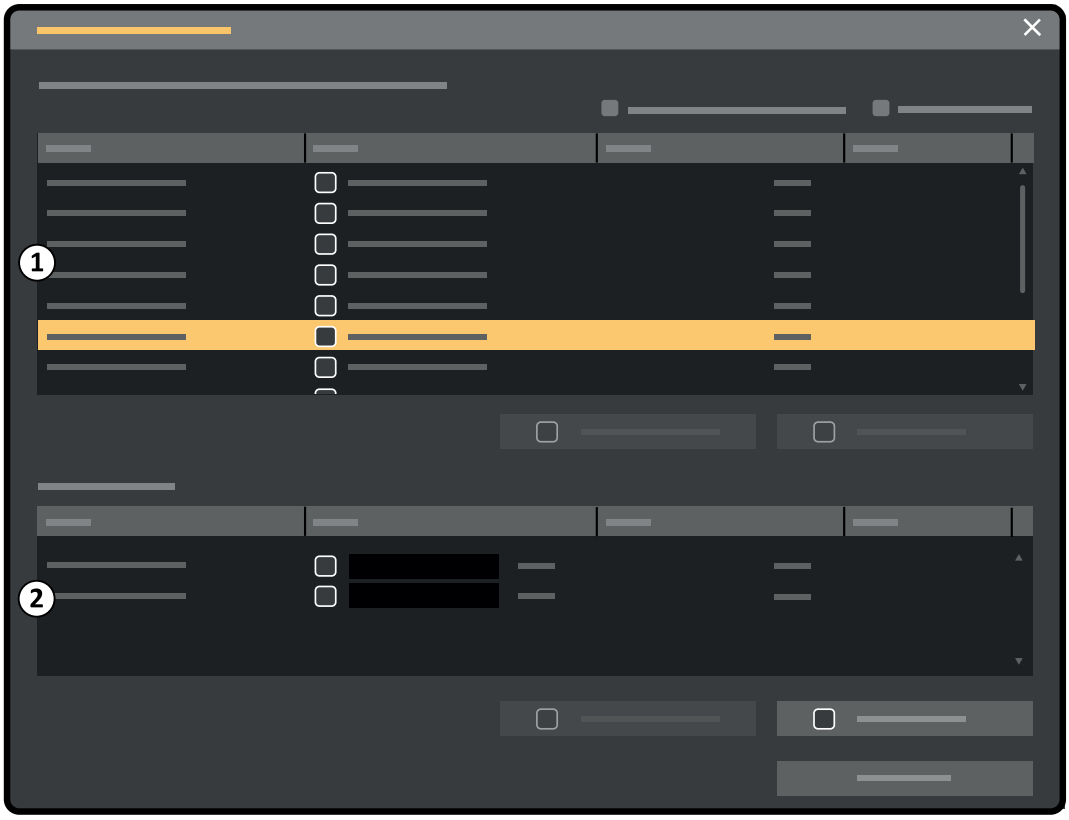

Figure 128 Software updates dialog box

Legend	
1	Software update package list
2	Download queue

1 If software updates are available, do one of the following:

- Click **System** and select **Software Updates**.
- Click the software update icon in the notification area.

The **Software Updates** dialog box is displayed. Software update packages are shown in a list.

2 Filter the list using the filter check boxes.

- Select **Show installed successfully** to include all successfully installed software update packages.
- Select **Show install failed** to include all software update packages that failed to install.

Each software update package has an icon displaying its status.

	Ready for download / Retry download
	Download queued

	Downloading
	Download paused
	Download invalid / installation failed
	Ready to install
	Installing
	Installed



3 To download a software update package that is ready for download, select it in the list and click **Download** or **Add to Download Queue**.

You can select more than one software update package at a time, by holding down the Ctrl key on the keyboard and clicking each of the packages you want to download.

The software update package is shown in the download queue and the progress of the download is displayed.

Once downloading is complete, the status of the package changes.

4 To abort a download, do the following:

a Select the download you want to abort in the download queue.

You can select more than one download at a time, by holding down the Ctrl key on the keyboard and clicking each of the downloads you want to abort.



b Click **Abort Download** to stop the selected download and remove it from the download queue.



5 To pause a download, select the download and click **Pause**.



6 To resume all paused downloads, click **Resume All**

7 To install a downloaded package, do the following:



a Select the package in the software update package list and click **Install**.

A confirmation dialog box is displayed, showing the estimated time required to install the selected package.

b Click **Install** to install the package, or click **Cancel** to close the dialog box without installing the package.

If you choose to install the package, its status changes in the software update package list.

Installation is performed automatically. If the installation is successful, this is shown in the software update package list.

If an installation fails, an error message is displayed.

NOTE ***If a software update package installation fails, the system is not ready for clinical use. If this occurs, contact technical support for assistance.***

8 To close the dialog box, click **Close**.

Downloading of software update packages continues.

14.13 Showing the Monitor Test Image

To assist with maintenance, you can make the system display the Society of Motion Pictures and Television Engineers (SMPTE) test image.

When the test image is displayed, you cannot use the system.

1 Ensure that the service application is not in use and that a remote assistance session is not being performed.

2 Click **System** in the review window and select **Show Monitor Test Image**.

A dialog box is displayed, requesting you to confirm that you want to display the test image.

3 Do one of the following:
- To close the dialog box without displaying the test image, click **No**.
- To display the test image, click **Yes**.

4 To stop displaying the image and restore the system to normal use, press any key or mouse button.

14.14 XperCT Calibration

You can perform XperCT calibration without assistance from technical support.

NOTE ***The following procedure is automated. You do not need to enable or disable X-ray. Follow the instructions provided on-screen, and interact with the system when instructed to do so.***

1 On the **System** menu, click **XperCT Calibration**.

2 In the **XperCT Calibration** dialog box, select a **Scan Type**:
- **Propeller**
- **Roll**

3 Follow the instructions provided in the **XperCT Calibration** dialog box to position the stand and table for the calibration procedure.

4 (FlexMove only) On the control module, use the **Move Beam XY Motorized** joystick to position the stand in the transverse zero position.

You can also do this by selecting a procedure in which the stand moves automatically to the transverse zero position.

5 Click **Start Calibration** and press and hold the acquisition hand switch or foot switch.

The system performs the calibration procedure.

6 Release the acquisition hand switch or foot switch when the system indicates that the calibration procedure is finished.

7 To stop the calibration procedure while it is in progress, click **Abort**.

14.14.1 Pre-Scan Calibration

When you select a head procedure with XperCT, a pop-up message informs you to run the pre-scan calibration procedure for better image quality. The pop-up message will not be displayed for the next hour.

1 On the **System** menu, click **XperCT Calibration**.

2 In the **XperCT Calibration** dialog box, tap **Pre-scan**, and then follow the instructions provided in the dialog box.

3 Press and hold the acquisition hand switch or foot switch.

The system performs the calibration procedure.

4 Release the acquisition hand switch or foot switch when the system indicates that the calibration procedure is finished.

5 To stop the calibration procedure while it is in progress, tap **Abort**.

14.15 Environmental Impact of the System

You can assess the environmental impact of the system by measuring the typical energy consumption during various operational modes.

To reduce the environmental impact of the system, switch it off when it is not in use. However, bear in mind any clinical limitations that might make switching the system off impractical.

For information, visit the following website:

www.cocir.org/index.php?id=198

14.16 Disposing of the System

Philips Healthcare is concerned about protecting the natural environment and ensuring continued safe and effective use of the system through proper support, maintenance and training.



Philips Medical Systems equipment is designed and manufactured to comply with relevant guidelines for environmental protection. As long as the system is properly operated and maintained it presents no risk to the environment. However, the equipment may contain materials which could be harmful to the environment if disposed of incorrectly. Use of such materials is essential for the implementation of certain functions and for meeting certain statutory and other requirements.

Final disposal is when the responsible organization disposes of the equipment or system in such a way that it can no longer be used for its intended purpose.

NOTE ***Computer disks that are part of the system could contain personal data. These disks should be disposed of according the service instructions.***

Do not dispose of the system, or any parts of it, with industrial or domestic waste. The system may contain materials such as lead, tungsten or oil, or other hazardous substances that can cause serious environmental pollution. The system also contains privacy sensitive information which should be properly erased.

Philips Medical Systems can support you with recovery of reusable parts, recycling useful materials, and the safe and effective disposal of equipment.

For more information about recycling Philips Medical Systems products, refer to the following website:

www.medical.philips.com/main/about/sustainability/recycling/index.wpd

Disposing of the Wireless Foot Switch Battery

This wireless foot switch contains lithium-ion batteries. It must be disposed of according to local, state, and federal laws regarding the disposal of lithium-ion batteries. If you cannot dispose of the wireless foot switch in your area, return it to the manufacturer for disposal.

Passing the System on to Another User

If the system is passed to another organization, it must be in its complete state, including all product support documentation.

You should make the new user aware of the support services that Philips Medical Systems provides. Before passing on the system or taking it out of service, all patient data must be deleted and unrecoverable on the system. It should be backed up elsewhere, if necessary.

Passing medical electrical products on to a new responsible organization may create serious technical, medical, and legal risks. Such risks can arise even if the system is given away. A responsible organization is strongly advised to seek advice from a Philips representative before committing to passing on any product.

Once the system has been passed on to a new user, the previous user may still receive important safety-related information. In many jurisdictions there is a clear duty on the previous user to communicate such safety-related information to new users. Previous users who are unable or unprepared to do this should inform Philips Medical Systems about the new user.

More Information

Contact the manufacturer for advice and information about disposing of the system. See *Contacting the Manufacturer* (page 388).

15 Security

The following sections provide information about important security considerations for using the system.

15.1 Customer Responsibilities

Philips Medical Systems recognizes that the security of its products is an important part of your facility's in-depth security strategy. However, these benefits can only be realized if you implement a comprehensive, multi-layered strategy (including policies, processes, and technologies) to protect information and systems from external and internal threats.

Following industry-standard practice; your strategy should address physical security, operational security, procedural security, risk management, security policies, and contingency planning. The practical implementation of technical security elements varies by site and may employ a number of technologies, including firewalls, virus-scanning software, authentication technologies, etc.

As with any computer-based system, protection must be provided such that firewalls and/or other security devices are in place between the medical system and any externally accessible systems.

The USA Veterans Administration has developed a widely used Medical Device Isolation Architecture for this purpose. Such perimeter and network defenses are essential elements in a comprehensive medical device security strategy.

Additional security and privacy information can be found on the following website:

www.philips.com/productsecurity

15.1.1 Risks Related to Security

There are several risks related to security that should be assessed.

- The device is not intended as a long term storage device. Customers are advised to export a study when the procedure ends to ensure availability of the related data. For more information, see *Exporting Data* (page 149). The export function can be configured to occur automatically.
- To ensure confidentiality, integrity, and availability of the device and related data, the following recommendations are made:
  - Implement network and physical access controls to limit the likelihood of compromise. For more information, see *Customer Responsibilities* (page 269).
  - Enable the security controls that are embedded into the device. For more information, see *System Administration* (page 232).
- It is recommended that the manufacturer's product security recommendations are monitored on a regular basis. For more information, see *Malware Protection* (page 270).

The assessment should be repeated whenever changes are made to the network. These changes include:

- Changes in the network configuration
- Connection of additional items to the network
- Disconnection of items from the network
- Updates or upgrades to items that are connected to the network

15.2 Malware Protection

This equipment incorporates protection mechanisms against the intrusion of malware.

Without proper cyber security maintenance, the effectiveness of these provisions may degrade over time, since malware is continuously altered to target newly discovered vulnerabilities.

Philips Medical Systems systematically analyzes sources of information related to cyber security vulnerabilities to assess the cyber security risk to its systems. To ensure the proper functioning of the system, Philips Medical Systems may recommend specific customer or service actions, or issue service recommendations to update, alter, or replace system protection mechanisms as described in this document.

The latest information, including the Product Security Policy Statement and recommended customer actions, can be found at:

www.philips.com/productsecurity

NOTE ***You should regularly check the system's published cyber security status at the link above.***

Despite preventive measures already implemented, a remote possibility remains that the system may become infected with malware. When malware is detected, or when you notice that unfamiliar behavior or degraded performance occurs repeatedly, including after being switched off and on again, you should call technical support for an inspection. When the inspection confirms the infection, be sure to take measures to contain and remove the source of infection. Technical support will reinstall the system software to bring the system back into specification. Technical support can also assist in accessing the system's event log, which may provide information useful for the investigation.

A whitelist approach to malware protection is applied. When whitelist protection software is installed, any untrusted software not mentioned on the whitelist is blocked.

15.2.1 Security Patches

Security patches alter the system design and require proper validation and approval by Philips Medical Systems.

The systematic analysis of cyber security vulnerabilities includes an assessment of the applicability and need to apply security patches, taking into account mitigating circumstances in the intended use and design of this system.

The latest information, including recommended customer actions, refer to the following website:

www.philips.com/productsecurity

15.2.2 Whitelist Protection

Whitelist protection software is installed on this system. The whitelist identifies all trusted software, which is allowed to execute on the equipment. The protection software prohibits the execution of untrusted software, effectively blocking malware before damage is done. Instead of relying on frequent updates, like for anti-virus software, it offers pro-active protection against a wide spectrum of malware and malware alterations.

Since only known trusted software is allowed to run, no regular updates are required.

16 Technical Information

The following sections provide information and data tables about the specification of the system.

16.1 Environmental Requirements

Operation

Environmental Condition	Range (Minimum to Maximum)
Ambient temperature	+10°C to +30°C (59°F to + 86°F)
Relative humidity	20% to 80%
Pressure	70 kPa to 106 kPa (0 to 3000 m altitude) (700 hPa to 1060 hPa)

NOTE ***To allow unrestricted air flow around the cabinets of the system, do not place any items on top of the cabinets.***

Transport and Storage

Environmental Condition	Range (Minimum to Maximum)
Temperature	-25°C to +70°C (-13°F to 158°F)
Relative humidity	5% to 95%
Pressure	70 kPa to 110 kPa (0 to 3000 m altitude) (700 hPa to 1100 hPa)

Equipment IP Ratings

Equipment	IP Rating	Protection
System	IPX0	Not protected
Patient support table base	IPX1	Protected against vertically falling water drops
Patient support tabletop	IPX2	Protected against vertically falling water drops when enclosure tilted up to 15 degrees
Viewpad	IPX2	Protected against vertically falling water drops when enclosure tilted up to 15 degrees
Review module	IPX2	Protected against vertically falling water drops when enclosure tilted up to 15 degrees
Pan handle	IP03	Protected against spraying water
Control module	IPX4	Protected against splashing water
Touch screen module	IP44	Protected against splashing water
Foot switch (wired and wireless)	IPX8	Protected against the effects of continuous immersion in water

16.2 X-ray System Configuration

The following table gives an overview of the X-ray tube usage for each system:

Monoplane Systems	Catalog Number	X-ray Tube
Azurion 3 M12	722 063	MRC 200+ 0508 ROT-GS 1003
Azurion 3 M15	722 064	MRC 200+ 0407 ROT-GS 1004

Monoplane Systems	Catalog Number	X-ray Tube
Azurion 7 M12	722 078	MRC 200+ 0508 ROT-GS 1003
Azurion 7 M20	722 079	MRC 200+ 0407 ROT-GS 1004

Biplane Systems	Catalog Number	Frontal X-ray Tube	Lateral X-ray Tube
Azurion 7 B12	722 067	MRC 200+ 0508 ROT-GS 1003	MRC 200+ 0508 ROT-GS 1003
Azurion 7 B20	722 068	MRC 200+ 0407 ROT-GS 1004	MRC 200+ 0508 ROT-GS 1003

MRC 200+ 0508 ROT-GS 1003 and cooling unit CU 3101

NOTE ***If your system has been upgraded, the X-ray tube may be MRC 200 0508 ROT-GS 1003. Any differences in specification are indicated below.***

Item	Specification
Maximum voltage	Fluoroscopy: 120 kV Exposure: 125 kV
Maximum tube current	Large focus: 1063 mA at 80 kV Small focus: 563 mA at 80 kV
Tube current for pulsed fluoroscopy with grid control	10 mA - 200 mA
Continuous loadability (at 23°C)	4000 W (MRC 200: 3200 W)

- Maximus ROTALIX Ceramic tube MRC 200+ 0508 ROT-GS 1003 with anode heat storage capacity of 6.4 MHUeff and 0.5/0.8 mm nominal focal spot values, maximal 45 and 85 kW short time load.
  - MRC 200: Anode heat storage capacity of 2.4 MHU
- Grid switching at pulsed fluoroscopy
- Tube housing ROT-GS 1003 for oil-cooled X-ray tube with thermal safety switch
- Cooling unit heat exchanger for direct and continuous forced cooling with oil
- Rotor control
- High-voltage cables
- Cover parts

MRC 200+ 0407 ROT-GS 1004 and cooling unit CU 3101

NOTE ***If your system has been upgraded, the X-ray tube may be MRC 200 0407 ROT-GS 1004. Any differences in specification are indicated below.***

Item	Specification
Maximum voltage	Fluoroscopy: 120 kV Exposure: 125 kV
Maximum tube current	Large focus: 813 mA at 80 kV Small focus: 353 mA at 85 kV
Tube current for pulsed fluoroscopy with grid control	10 mA - 160 mA
Continuous loadability (at 23°C)	4000 W (MRC 200: 3200 W)

- Maximus ROTALIX Ceramic tube MRC 200+ 0407 ROT-GS 1004 with anode heat storage capacity of 6.4 MHUeff and 0.4/0.7 nominal focal spot values, maximal 30 and 65 kW short time load
  - MRC 200: Anode heat storage capacity of 2.4 MHU
- Grid switching at pulsed fluoroscopy
- Tube housing ROT-GS 1004 for oil-cooled X-ray tube with thermal safety switch
- Cooling unit heat exchanger for direct and continuous forced cooling with oil
- Rotor control

- High Voltage cables
- Cover parts

Assembly of X-ray tube and collimator

Item	Specification
Loading factors corresponding to the maximum specified energy input to anode in one hour when applied at the nominal X-ray tube voltage	125 kV, 28 mA (3500 W)
Maximum symmetrical radiation field	MRC 200+ 0407 ROT-GS 1004: 35 x 35 cm at 1 m distance MRC 200+ 0508 ROT-GS 1003: 28 x 28 cm at 1 m distance

16.2.1 Tube Output Power

Exposure	Channels with MRC 200+ 0508 ROT-GS 1003	Channels with MRC 200+ 0407 ROT-GS 1004
Highest electric power (X-ray tube current and X-ray tube voltage resulting in highest electric power)	85 kW (125 kV, 680 mA)	65 kW (125 kV, 520 mA)
Highest electric output power at 100kV, 0.1s (X-ray tube current)	85 kW (850 mA)	65 kW (650 mA)
Maximum X-ray tube voltage and highest X-ray tube current at that voltage	125 kV, 680 mA	125 kV, 520 mA
Maximum X-ray tube current and highest X-ray tube voltage at that current	1063 mA, 80 kV The maximum tube current cannot be reached with the current system configuration.	813 mA, 80 kV
Minimum X-ray tube current and lowest X-ray tube voltage at that current	10 mA, 40 kV	10 mA, 40 kV
The lowest current time product (loading factors at the lowest current time product)	0.1 mAs (10 mA, 10 ms)	0.1 mAs (10 mA, 10 ms)
Note: Values ±10%.		

Fluoroscopy with Grid Switch	Channels with MRC 200+ 0508 ROT-GS 1003	Channels with MRC 200+ 0407 ROT-GS 1004
Highest electric power (X-ray tube current and X-ray tube voltage resulting in highest electric power)	25 kW (125 kV, 200 mA)	20 kW (125 kV, 160 mA)
Highest electric output power at 100kV, 0.1s (X-ray tube current)	20 kW (200 mA)	16 kW (160 mA)
Maximum X-ray tube voltage and highest X-ray tube current at that voltage	120 kV, 200 mA	120 kV, 160 mA
Minimum X-ray tube voltage and lowest X-ray tube current at that voltage	40 kV, 1.5 mA	40 kV, 1.5 mA
Maximum X-ray tube current and highest X-ray tube voltage at that current	200 mA, 125 kV	160 mA, 125 kV
Minimum X-ray tube current and lowest X-ray tube voltage at that current	10 mA, 40 kV	10 mA, 40 kV
The lowest current time product (loading factors at the lowest current time product)	0.007 mAs (2 mA, 3.5 ms)	0.007 mAs (2 mA, 3.5 ms)

Fluoroscopy with Grid Switch	Channels with MRC 200+ 0508 ROT-GS 1003	Channels with MRC 200+ 0407 ROT-GS 1004

Notes:
- *Values ±10%.*
- *Fluoroscopy is available in pulsed fluoroscopy mode only.*

16.2.2 Accuracy of Dosimetric Indications and Automatic Control System

Dosimetric Indication	Accuracy
Accuracy of the reference air kerma	±35% (above 100 mGy)
Accuracy of reference air kerma rate	±35% (above 6 mGy/min)
Accuracy of cumulative dose area product	±35% (above 2.5 Gy·cm^2)
Coefficient of variation of the automatic control system	<0.05

All given reference air kerma (rate) values have an accuracy of ±35%, in accordance with IEC 60601-2-43:2010, 203.6.4.5.

16.3 X-ray Generator

Technical data according to IEC 60601-2-54

This section contains X-ray generator specific information. Information about system specific usage of the X-ray generator is described in the next section.

Methods of measurement

Item	Method
X-ray tube voltage	Tube voltage is measured with the aid of balanced high-voltage bleeders in the high voltage circuit
X-ray tube current	Tube current is measured on the cathode side in the rectified high-voltage circuit of the X-ray generator
Load time	Load time is measured between 75% ±7.5% peak voltage of the high-voltage rise edge and 75% ±7.5% peak voltage of the high-voltage fall edge
Current-time product	Current-time product is measured on the cathode side in the rectified high voltage circuit of the HV generator between 75% ±7.5% peak voltage of the high-voltage rise edge and 75% ±7.5% peak voltage of the high-voltage fall edge

Parameter / Ranges

IEC 60601-2-54	Output Parameter	Mode	Loading Factor
§ 201.7.9.2.1.101 a	Maximum X-ray tube voltage and highest X-ray tube current at that voltage	Radiographic (Intermittent)	125 kV, 720 mA
§ 201.7.9.2.1.101 b	Maximum X-ray tube current and highest X-ray tube voltage at that current	Radiographic (Intermittent)	1000 mA, 100 kV
§ 201.7.9.2.1.101 c	Combination of X-ray tube current and X-ray tube voltage resulting in highest output power	Radiographic (Intermittent)	1000 mA, 100 kV
§ 201.7.9.2.1.101 d	Highest constant output power at 100kV, 0.1s	Radiographic (Intermittent)	100 kW, 1000 mA

IEC 60601-2-54	Output Parameter	Mode	Loading Factor
§ 201.7.9.2.1.101 e	The lowest current time product or the combination of loading factors resulting in the lowest current time product	Radiographic (Intermittent)	0.1 mAs
§ 201.7.9.2.1.101 f	Nominal shortest irradiation time (AEC exposures)	AEC	n/a no photo time technique
§ 201.7.9.2.1.101 f	Ranges of tube load factors controlled by AEC	AEC	Ranges of tube load factors determined by X-ray protocol. The maximum range is: 40 – 125 kV; 10 – 1000 mA. Tolerances according to §203.6.4.3.104.3 and §203.6.4.3.104.4

According to IEC 60601-2-54 section 201.7.2.7

Electrical Data Generator		
Power supply		400 V – 480 V ±10%, 50 Hz / 60 Hz, 3 – phase, switched and fused (50 A slow blow) by system PDU
Radiography	Maximum voltage power	125 kV
	Nominal electrical power	100 kW (100 kV; 0.1 s)
	Maximum electrical power	• 100 kW • 1000 mA at 100 kV • 720 mA at 125 kV
Continuous output		1.5 kW (for example, 9 fpm at 100 kW; 0.1 s)
High-voltage generation		Converter
Ripple		DC voltage
Power supply cooling unit		Cooling Unit: 230 V ±10%, maximum 2.5 A, 50 Hz / 60 Hz, 1 – phase switched and fused by system PDU
Duty cycle		The generator can be used continuously as long as average power limitations described in *X-ray System Configuration* (page 271) are satisfied.

Radiography with automatic exposure control	
mAs	0.01 mAs...10 mAs
Switching times	3.0 ms...10 ms

Radiography without automatic exposure control	
Tube voltage	40 kV...125 kV adjustable in steps of 1 kV or according to a sequence the steps of which roughly correspond to an exposure increment. In the case of tubes with lower maximum voltage this is limited accordingly.
Tube current	For kV-mA-s and kV-mAs techniques this can be adjusted in steps [1]
	10 m A...1000 mA
mAs range	0.1 mAs...2000 mAs Adjustable in steps [1]
Exposure times	1 ms...16 s Adjustable in steps [1]
Note 1: Steps selectable on system level	

Pulsed fluoroscopy with grid control	
Tube voltage	40 kV - 125 kV
Tube current	10 mA - 200 mA (depending on the tube configuration)

IEC 60601-2-54 section 203.6.4.3.104

Exposure	Centeray X-ray generator (Typical range of application)	
	Certeray Performance	Requested by Standard
Tube voltage	± (5%)	± 10%
Tube current-time product	± (3% + 0.2 mAs)	± (10% + 0.2 mAs)
Tube current	± (3% + 1.0 mA) (Tp > 35 ms) ± (8% + 1.0 mA) (1 < Tp < 35 ms)	± 20%
Exposure time	± (6% + 0.1 ms)	± (10% + 1 ms)
mAs post-exposure display	± (3% + 0.2 mAs)	
Post-exposure time display	± (2% + 0.1 ms)	

IEC 60601-2-54, cl.203.6.4.4

The system adapts the exposure settings by varying one or more loading factors, based on the source-to-image distance and objects in the beam using automatic exposure control. The following graphs show an example of the range and inter-relationship of loading factors for a single X-ray protocol.

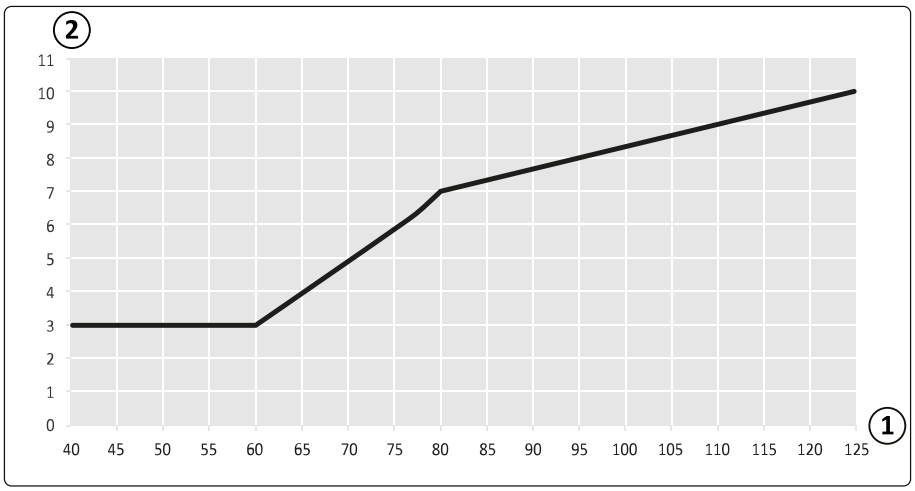

Figure 129 Loading factors (Left Coronary, 15 fps) - pulse width and tube voltage

Legend	
1	Tube voltage (kV)
2	Pulse width (ms)

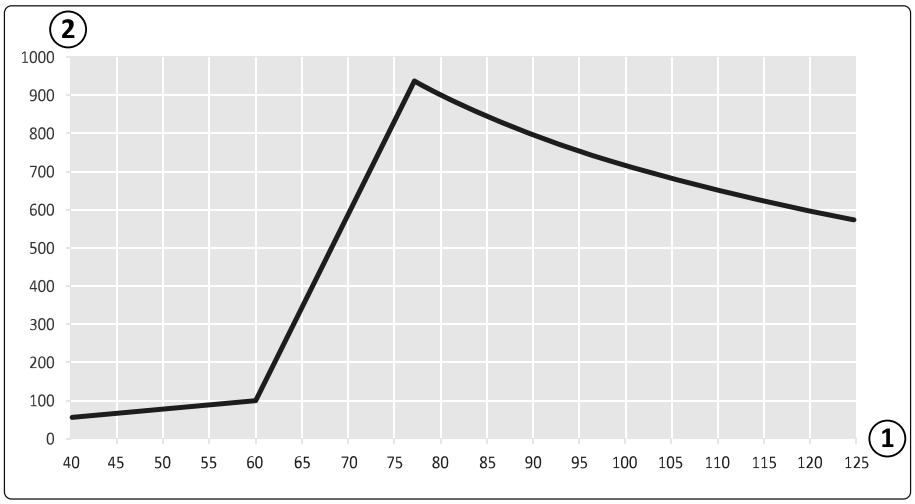

Figure 130 Loading factors (Left Coronary, 15 fps) - tube current and voltage

Legend	
1	Tube voltage (kV)
2	Tube current (mA)

Compatibility

The Certeray iX High Voltage generator is compatible with the following tubes made by Philips Medical Systems:

- MRC 200+ 0407-ROT-GS 1004
- MRC 200+ 0508-ROT-GS 1003

Labels

For information about labels, see *Equipment Labels* (page 367).

16.4 Anti-Scatter Grid

Detector Type	Line Rate [lines/cm]	Grid Ratio	Focal Spot Distance [cm]
FD12	N74	r14	f105
FD15	N70	r13	f100
FD20	N44	r12	f105

16.5 Mains Power

According to the IEC60601-1 definition, the system is classified as class I equipment for continuous operation.

System

Configuration	Settings
Recording mode of operation	Continuous
Supply configurations	3 phase Y, 4 wires (L1, L2, L3, PE)

Configuration	Settings
Mains voltage (± 10%), current, peak current, frequency	3~400 V, 76 A, 330 Apk, 50/60 Hz 3~415 V, 73 A, 325 Apk, 50/60 Hz 3~440 V, 69 A, 315 Apk, 50/60 Hz 3~480 V, 63 A, 300 Apk, 50/60 Hz
Maximum mains resistance	400 V: 140 mOhm (+ 80 mOhm internal resistance) 415 V: 215 mOhm (+ 80 mOhm internal resistance) 440 V: 325 mOhm (+ 80 mOhm internal resistance) 480 V: 465 mOhm (+ 80 mOhm internal resistance)
Maximum resistance at generator	400 V: 220 mOhm 415 V: 295 mOhm 440 V: 405 mOhm 480 V: 545 mOhm
Hospital mains fuse	125 amp with gG characteristics (slow blow)
Maximum required power	110 kW

NOTE ***All connected phase wires shall have an upstream disconnect switch with a rating of up to 125 A.***

NOTE ***All installations and wiring up to the incoming mains power shall be installed and verified to comply with applicable local regulations.***

NOTE ***Input wiring shall be at least 6AWG (13.3 mm^2).***

Additional Equipment

Equipment	Mains Voltage	Mains Frequency	Maximum Power Consumption
Wireless Foot Switch Charger	100 - 240 V AC	50 / 60 Hz	26 W
XperGuide Laser Tool Charger	100 - 240 V AC	50 / 60 Hz	6 W (approximately)
Wall Connection Box	100 - 240 V AC	50 / 60 Hz	40 W
Equipment Rack	100 - 240 V AC	50 / 60 Hz	3680 W

16.6 Monitor Ceiling Suspension

Weight, Load, and Dimensions

MCS	Max. total weight (kg)	Width x Height x Depth (mm)
2-fold	115	850 x 590 x 400 (monoplane only)
4-fold	155	1250 x 1150 x 524
6-fold	180	1424 x 1150 x 524

Movement Range

Movement ranges are approximate.

			Vertical (mm)
MCS	Longitudinal (mm)	Lateral (mm)	Ceiling height 2900 mm
2-fold	3600	3000	520 (monoplane only)
4-fold	3600	3000	320
6-fold	3600	3000	320

Actuator

Item	Specification
Mains voltage	230 V
Mains frequency	50 / 60 Hz
Maximum power consumption	500 W
Maximum speed	12 mm/s (0.5 in/s)

16.6.1 FlexVision (XL) Monitor Ceiling Suspension

Dimensions and Weight

MCS	Width [mm]	Height [mm]	Depth [mm]	Weight [kg]
1-fold (XL)	1750	1150	250	220
3-fold (XL)	1750	1450	250	260

Movement Range

MCS	Rotation [degrees]	Horizontal X-axis [mm]	Horizontal Y-axis [mm]	Vertical [mm] Ceiling height below 2900 mm	Vertical [mm] Ceiling height 2900 mm and above
3-fold (one large screen, two optional 27-inch monitors)	330	3000	3600	Not available	320

NOTE ***Vertical movement is only available where ceiling height permits.***

Actuator

When available, vertical movement is provided by the actuator.

Item	Specification
Mains voltage	230 V
Mains frequency	50 / 60 Hz
Maximum power consumption	500 W
Maximum speed	12 mm/s (0.5 in/s)

16.6.2 Supported Monitor Combinations

The following combinations of supported monitors can be used.

NOTE ***A combination of the monitors listed below can be combined with dummy monitors or any other monitors. However, the number of monitors mounted must not exceed the maximum-fold MCS configuration. That is, only 6 monitors can be mounted in a 6-fold MCS.***

2-fold MCS supports two 27-inch monitors.

4-fold MCS supports three or four 27-inch monitors.

6-fold MCS supports the following configurations:

- Four, five, or six 27-inch monitors.
- Four 27-inch monitors with two other supported monitors.

1-fold XL MCS supports one 58-inch monitor.

3-fold XL MCS supports one 58-inch monitor and two 27-inch monitors.

16.6.3 MCS Cabling Interface

The monitor ceiling suspension provides the following cabling for an optional monitor.

Cabling

Item	Specification
Mains supply	100-240 Vac 50-60 Hz Protective earth
Video signal	DVI-D input connector DVI-D output connector Multiple frequencies up to 1920 x 1200, 60Hz

The mains supply and protective earth can be connected as a part of the system. Alternatively, if the monitor and its related equipment need to be electrically and galvanically isolated, the monitor can be connected separately from the system.

Optional Monitor

Item	Specification
Mounting interface	VESA interface 100 x 100 mm
Maximum power consumption	100 W

16.7 Springarm Monitor Ceiling Suspension

The springarm MCS is available in the following configurations:

- 2-fold springarm MCS for two 27-inch (9 kg) monitors.
- 3-fold springarm MCS for one 27-inch (9 kg) monitor and two 19-inch (5 kg) monitors.

A dummy monitor can be used to susbtitute one of the monitors in either configuration. Additional components cannot be mounted in the springarm MCS.

The lifetime of the 2-fold and 3-fold springarm MCS is 10 years.

16.8 Medical Monitor Boom

A medical monitor boom can be used to hold the monitors of the X-ray system.

For more information, refer to the Instructions for Use supplied with the medical monitor boom.

16.9 Examination Light

Item	Specification
Light intensity	60,000 lux at 1 m
Color temperature	4300 K
Color rendering index	95

Item	Specification
Focusable light field size	13 to 19 cm (5.1 to 7.5 inch)
Working distance	70 to 140 cm (27.6 to 55.1 inch)
Lamp type	LED 1.2 A / 24V DC, 28 W
Mains power	100 to 240 V AC, 50 to 60 Hz
Weight	< 15 kg
Maximum radiation in field	210 W/m^2 at 1 m
Temperature increase in head area	0.5 °C (33°F)

16.10 Detectors

C12/F12

Item	Specification		
Detector	30 cm (11.6 inch) diagonal square, triple mode flat detector subsystem		
Field size (available at all source-to-image positions)	30 cm (11.6 inch) 27 cm (10.5 inch) 22 cm (8 inch) 19 cm (7 inch) 15 cm (6 inch)		
Pixel size	154 x 154 µm		
Detective quantum efficiency (DQE)	77% at 0 lp/mm		
Spatial resolution properties:	MTF: 1.0 lp/mm >60% Nyquist: 3.25 lp/mm		
Dynamic range	Linear within 2% from 2500 nGy in fluoroscopy mode to 50000 nGy in exposure mode (dependent upon operating mode)		
Output digital video	Field size:	Maximum resolution:	Minimum resolution:
	30 cm	1340 x 1340 pixels	664 x 664 pixels
	27 cm	1232 x 1232 pixels	960 x 960 pixels
	22 cm	1016 x 1016 pixels	508 x 508 pixels
	19 cm	864 x 864 pixels	432 x 432 pixels
	15 cm	720 x 720 pixels	360 x 360 pixels
Geometrical fill factors	Photodiode (optical fill factor): 63% Scintillator (X-ray fill factor): 100%		

F15

Item	Specification
Detector	26 x 33 cm (10 x 13 inch) 7 mode Flat Detector subsystem
Field size (available at all source-to-image positions)	39 cm (15.2 inch) 37 cm (14.4 inch) 31 cm (13 inch) 27 cm (10.5 inch) 22 cm (8 inch) 19 cm (7 inch) 15 cm (6 inch)
Pixel size	184 x 184 µm
Detective quantum efficiency (DQE)	70% at 0 lp/mm

Item	Specification		
Spatial resolution properties:	MTF: • 1.0 lp/mm >60% • 2.0 lp/mm >30% Nyquist: 3.25 lp/mm (>15%)		
Dynamic range	Linear within 2% up to 4300 nGy		
Output digital video	Field size:	Maximum resolution:	Minimum resolution:
	39 cm	2000 x 1688 pixels	1000 x 844 pixels
	37 cm	1688 x 1688 pixels	844 x 844 pixels
	31 cm	1340 x 1340 pixels	664 x 664 pixels
	27 cm	1232 x 1232 pixels	960 x 960 pixels
	22 cm	1016 x 1016 pixels	508 x 508 pixels
	19 cm	864 x 864 pixels	432 x 432 pixels
	15 cm	720 x 720 pixels	360 x 360 pixels
Geometrical fill factors	Photodiode (optical fill factor): 63% Scintillator (X-ray fill factor): 100%		

C20/F20

Item	Specification		
Detector	30 x 40 cm (11.6 x 16 inch) (48 cm / 18.9 inch diagonal) 8-mode flat detector subsystem		
Field size (available at all source-to-image positions)	48 cm (19 inch), rectangular 42 cm (17 inch), square 37 cm (14.4 inch), square 31 cm (13 inch), square 27 cm (10.5 inch), square 22 cm (8 inch), square 19 cm (7 inch), square 15 cm (6 inch), square		
Detector rotation	90 degrees		
Detector rotation time	3 s		
Maximum detector rotation speed	45 degrees/s		
Pixel size	154 x 154 µm		
Detective quantum efficiency (DQE)	77% at 0 lp/mm		
Spatial resolution properties:	MTF: • 1.0 lp/mm >60% • 2.0 lp/mm >30% Nyquist: 3.25 lp/mm		
Dynamic range	Linear within 2% from 2500 nGy in fluoroscopy mode to 50000 nGy in exposure mode (dependent upon operating mode)		
Output digital video	Field size:	Maximum resolution:	Minimum resolution:
	48 cm	1920 x 1448 pixels	960 x 742 pixels
	42 cm	1904 x 1904 pixels	952 x 952 pixels
	37 cm	1688 x 1688 pixels	844 x 844 pixels
	31 cm	1432 x 1432 pixels	716 x 716 pixels
	27 cm	1232 x 1232 pixels	616 x 616 pixels
	22 cm	1016 x 1016 pixels	508 x 508 pixels
	19 cm	864 x 864 pixels	432 x 432 pixels
	15 cm	720 x 720 pixels	360 x 360 pixels

Item	Specification
Geometrical fill factors	Photodiode (optical fill factor): 63% Scintillator (X-ray fill factor): 100%

16.11 Beam Carriers

F12 System

The X-ray beam field is always aligned with the image receptor area and the reference axis is always perpendicular to the image receptor plane.

Item	Specification
Rotation speed	0 - 25 degrees/s (variable) These speeds are only valid when the stand is in its working position, otherwise the maximum speed is 8°/s
Angulation speed	0 - 25 degrees/s (variable) These speeds are only valid when the stand is in its working position, otherwise the maximum speed is 8 degrees/s
Projection angles	Angulation: 45 degrees caudal to 45 degrees cranial Rotation: 120 degrees LAO to 120 degrees RAO
Isocenter to floor	106.5 cm (41.9 inch)
Focal spot to isocenter	76.5 cm (30.1 inch)
Focal spot to detector (source-to-image distance)	89.0 to 123.5 cm (35.0 to 48.6 inch)
Detector movement speed	Toward the patient: 10 cm/s Away from the patient: 20 cm/s
Throat depth	105 cm (41.3 inch)
Motorized stand rotation	90 degrees left to 90 degrees right at 12 degrees/s
Rotation scan	From 120 degrees RAO (-rotation) to 120 degrees LAO (+rotation) at a speed of up to 55 degrees/s

C12 System

The X-ray beam field is always aligned with the image receptor area and the reference axis is always perpendicular to the image receptor plane.

Item	Specification
Rotation speed	0 - 25 degrees/s (variable) These speeds are only valid when the stand is in its working position, otherwise the maximum speed is 8 degrees/s
Angulation speed	0 - 25 degrees/s (variable) These speeds are only valid when the stand is in its working position, otherwise the maximum speed is 8 degrees/s
Projection angles with the C-arm positioned at the head end of the table	Angulation: 45 degrees caudal to 45 degrees cranial Rotation: 120 degrees LAO to 120 degrees RAO
Projection angles with the C-arm positioned at the side of the table	Angulation: 120 degrees caudal to 120 degrees cranial Rotation: 45 degrees LAO to 45 degrees RAO
Isocenter to floor	106.5 cm (41.9 inch)
Focal spot to isocenter	76.5 cm (30.1 inch)
Focal spot to detector (source-to-image distance)	89.0 to 123.5 cm (35.0 to 48.6 inch)
Detector movement speed	Toward the patient: 10 cm/s Away from the patient: 20 cm/s
Throat depth	105 cm (41.3 inch)
Longitudinal movement (manual or motorized)	260 cm (102.4 inch) With extended ceiling rail (option): 410 cm (161.4 inch)

Item	Specification
Motorized longitudinal movement speed (option)	15 cm/s
Motorized stand rotation	90 degrees left to 90 degrees right at 12 degrees/s
Rotation scan	Propeller movement: From 120 degrees RAO (-rotation) to 120 degrees LAO (+rotation) at a speed of up to 55 degrees/s Roll movement: From 45 degrees LAO to 45 degrees RAO at a speed of up to 30 degrees/s
Minimum ceiling height	270 cm (106 inch)

F15 System

The X-ray beam field is always aligned with the image receptor area and the reference axis is always perpendicular to the image receptor plane.

Item	Specification
Rotation speed	0 - 25 degrees/s (variable) These speeds are only valid when the stand is in its working position, otherwise the maximum speed is 8 degrees/s
Angulation speed	0 - 25 degrees/s (variable) These speeds are only valid when the stand is in its working position, otherwise the maximum speed is 8 degrees/s
Projection angles	Angulation: 90 degrees caudal to 90 degrees cranial Rotation: 185 degrees LAO to 120 degrees RAO
Isocenter to floor	114.0 cm (44.9 inch)
Focal spot to isocenter	81.0 cm (30.9 inch)
Focal spot to detector (source-to-image distance)	89.5 to 119.5 cm (35.2 to 47.1 inch)
Detector movement speed	Toward the patient: 10 cm/s Away from the patient: 15 cm/s
Throat depth	90 cm (35.4 inch)
Motorized stand rotation	90 degrees left to 90 degrees right at 12 degrees/s
Rotation scan	From 185 degrees RAO (-rotation) to 120 degrees LAO (+rotation) at a speed of up to 55 degrees/s

F20 System

The X-ray beam field is always aligned with the image receptor area and the reference axis is always perpendicular to the image receptor plane.

Item	Specification
Rotation speed	0 - 25 degrees/s (variable) These speeds are only valid when the stand is in its working position, otherwise the maximum speed is 8 degrees/s
Angulation speed	0 - 25 degrees/s (variable) These speeds are only valid when the stand is in its working position, otherwise the maximum speed is 8 degrees/s
Projection angles	Angulation: 90 degrees caudal to 90 degrees cranial Rotation: 120 degrees LAO to 185 degrees RAO
Isocenter to floor	113.5 cm (44.7 inch)
Focal spot to isocenter	81 cm (31.9 inch)
Focal spot to detector (source-to-image distance)	89.5 to 119.5 cm (35.2 to 47 inch)
Detector movement speed	Toward the patient: 10 cm/s Away from the patient: 15 cm/s
Throat depth	90 cm (35.4 inch)
Motorized stand rotation	90 degrees left to 90 degrees right at 12 degrees/s

Item	Specification
Rotation scan	From 185 degrees RAO (-rotation) to 120 degrees LAO (+rotation) at a speed of up to 55 degrees/s

C20 System

The X-ray beam field is always aligned with the image receptor area and the reference axis is always perpendicular to the image receptor plane.

Item	Specification
Rotation speed	0 - 25 degrees/s (variable) These speeds are only valid when the stand is in its working position, otherwise the maximum speed is 8 degrees/s
Angulation speed	0 - 25 degrees/s (variable) These speeds are only valid when the stand is in its working position, otherwise the maximum speed is 8 degrees/s
Projection angles with the C-arm positioned at the head end of the table	Angulation: 90 degrees caudal to 90 degrees cranial Rotation: 120 degrees LAO to 185 degrees RAO
Projection angles with the C-arm positioned at the side of the table	Angulation: 185 degrees caudal to 120 degrees cranial Rotation: 90 degrees LAO to 90 degrees RAO
Isocenter to floor	106.5 cm (41.93 inch)
Focal spot to isocenter	81 cm (31.9 inch)
Focal spot to detector (source-to-image distance)	89.5 to 119.5 cm (35.2 to 47 inch)
Detector movement speed	Toward the patient: 10 cm/s Away from the patient: 15 cm/s
Throat depth	90 cm (35.4 inch)
Longitudinal movement (manual or motorized)	260 cm (102.4 inch) With extended ceiling rail (option): 410 cm (161.4 inch)
Motorized longitudinal movement speed (option)	15 cm/s
Motorized stand rotation	90 degrees left to 90 degrees right at 12 degrees/s
Rotation scan	Propeller movement: From 185 degrees RAO (-rotation) to 120 degrees LAO (+rotation) at a speed of up to 55 degrees/s Roll movement: From 90 degrees LAO to 90 degrees RAO at a speed of up to 30 degrees/s
Minimum ceiling height	270 cm (106 inch)

Lateral Beam Carriers for Biplane Systems

Item	Specification
Detector size	12-inch (FD12) or 15-inch (FD15)
Detector orientation	Fixed (non-rotatable)
Rotation speed	8 degrees/s (also for combined frontal and lateral movements)
Angulation speed	8 degrees/s
Roll angle	L-arc C: 0 degrees to +90 degrees L-arc N: -115 degrees to -27 degrees
Propeller angle (skew)	-45 degrees to +45 degrees
Isocenter to floor (depending on the system in use)	F12/12: 106.5 cm (41.9 inch) F20/12: 114.0 cm (44.9 inch) F20/15: 114.0 cm (44.9 inch)
Focal spot to detector (source-to-image distance)	FD12: 87.8 to 130.6 cm (34.6 to 51.4 inch) FD15: 87.4 to 130.2 cm (34.4 to 51.3 inch)
Detector movement speed	Toward the patient: 6 cm/s Away from the patient: 9 cm/s

Item	Specification
Longitudinal movement (manual or motorized)	315 cm (124 inch)
Motorized longitudinal movement speed (option)	Outside the working area: 12 cm/s Inside the working area: 6 cm/s

16.12 Beam Carriers with FlexMove

C20/F20 Systems

The X-ray beam field is always aligned with the image receptor area and the reference axis is always perpendicular to the image receptor plane.

Item	Specification
Rotation speed	0 - 25 degrees/s (variable) These speeds are only valid when the stand is in its working position, otherwise the maximum speed is 8 degrees/s
Angulation speed	0 - 25 degrees/s (variable) These speeds are only valid when the stand is in its working position, otherwise the maximum speed is 8 degrees/s
Projection angles with the C-arm positioned at the head end of the table	Angulation: 90 degrees caudal to 90 degrees cranial Rotation: 120 degrees LAO to 185 degrees RAO
Projection angles with the C-arm positioned at the side of the table	Angulation: 185 degrees caudal to 120 degrees cranial Rotation: 90 degrees LAO to 90 degrees RAO
Isocenter to floor	106.5 cm (41.9 inch)
Focal spot to isocenter	81 cm (31.9 inch)
Focal spot to detector (source-to-image distance)	89.5 to 119.5 cm (35.2 to 47 inch)
Detector movement speed	Toward the patient: 10 cm/s Away from the patient: 15 cm/s
Throat depth	90 cm (35.4 inch)
Longitudinal movement (manual or motorized)	With FlexMove normal ceiling rail: 440 cm (137.2 inch) With FlexMove extended ceiling rail: 540 cm (212.5 inch)
Motorized longitudinal movement speed (option)	15 cm/s
Transversal movement (manual or motorized)	260 cm (102.3 inch)
Motorized transversal movement speed	15 cm/s
Motorized stand rotation	90 degrees left to 90 degrees right at 12 degrees/s
Rotation scan	Propeller movement: From 185 degrees RAO (-rotation) to 120 degrees LAO (+rotation) at a speed of up to 55 degrees/s Roll movement: From 45 degrees LAO to 45 degrees RAO at a speed of up to 30 degrees/s
Ceiling height	Maximum: 310 cm (122 inch) Minimum: 290 cm (114.2 inch)

16.13 Patient Table

AD7 Patient Table

The patient table is available with a neuro tabletop or a cardio tabletop. The cardio tabletop can be used for a wide range of applications, including vascular and non-vascular procedures.

The following figure indicates dimensions for the neuro tabletop and cardio tabletop.

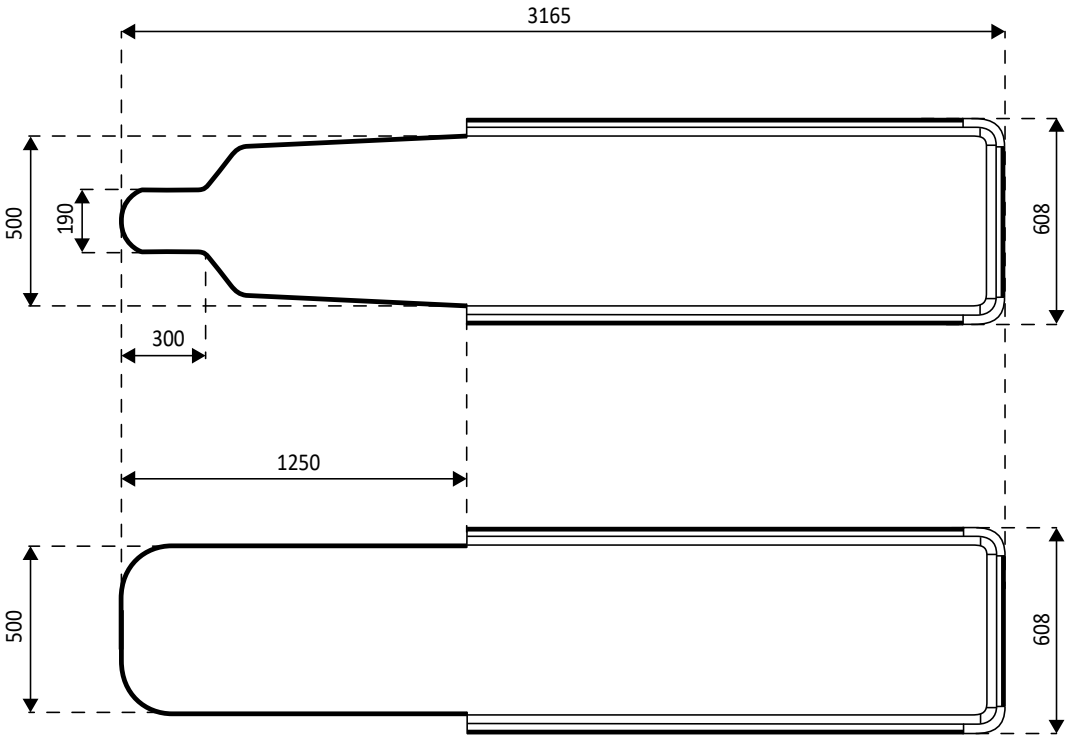

Figure 131 Tabletop dimensions: Neuro (top) and Cardio (bottom)

Specification	
Maximum patient weight	250 kg
Maximum weight of all accessories (total)	50 kg
Maximum permissible mass (patient plus accessories)	275 kg
Additional allowable force for Cardio Pulmonary Resuscitation (CPR)	500 N
Maximum load on the table accessory rail as a result of accessories (maximum 40 kg on a maximum distance of 0.45 m from the table accessory rail, either horizontal or not)	50 kg Torque: 184 Nm Inertia: 19 kgm^2
Maximum load on the additional table accessory rail as a result of accessories	10 kg Torque downward: 40 Nm Torque upward: 20 Nm
The table can be fixed in all positions with use of the brakes	-

Additional Accessory Weight

It is possible to increase the maximum permissible weight of accessories by reducing the maximum permissible patient weight under the following conditions:

- An additional 25 kg above the current maximum weight limit of 50 kg is allowed, increasing the maximum weight of all accessories to 75 kg.
- The maximum patient weight is reduced to 200 kg.
- The additional accessory weight should be evenly distributed over the entire length of the two table accessory rails at the nurse side and doctor side of the tabletop.
- Additional accessory weight should not be placed on the table accessory rail at the foot end of the tabletop.

Movements

Movements	Table with Cradle/Tilt	Table without Cradle/Tilt
Lateral movement	Manual/Motorized	Manual/Motorized
	For the AD7XNT patient table, motorized movement is optional	
Lateral movement stroke	-180 to +180 mm	-180 to +180 mm
Lateral motorized movement speed	60 mm/s	60 mm/s
Longitudinal movement	Manual/Motorized	Manual/Motorized
	For the AD7XNT patient table, motorized movement is optional For the AD7XT patient table, motorized movement depends on the tilt angle	
Longitudinal movement stroke	1200 mm	1200 mm
Longitudinal motorized movement speed	150 mm/s	150 mm/s
Height movement	Motorized	Motorized
Height movement stroke (distance between upper side of tabletop and floor) without adaption plate	790-1040 mm	740-1020 mm
Height movement stroke (distance between upper side of tabletop and floor) with adaption plate	820-1070 mm	770-1050 mm
Height movement stroke with swivel applicable	870-1120 mm	820-1100 mm
Height movement speed	30 mm/s	30 mm/s
Tilt movement	Motorized	Not applicable
Tilt movement angle range	-16.5 degrees to 16.5 degrees	Not applicable
Tilt movement speed	2 degrees/s	Not applicable
Pivot movement	Manual	Manual
Pivot movement angle	180 degrees / -90 degrees 90 degrees / -180 degrees	180 degrees / -90 degrees 90 degrees / -180 degrees
Pivot movement angle with Swivel option	180 degrees / -90 degrees	180 degrees / -90 degrees
Mechanical arret positions	0 degrees, ±13 degrees and ±90 degrees	0 degrees, ±13 degrees and ±90 degrees
Swivel movement	Motorized	Motorized
Swivel movement stroke	782 mm	782 mm
Swivel movement speed	20 degrees/s	20 degrees/s
Cradle movement	Motorized	Not applicable
Cradle movement angle	-15 degrees to +15 degrees	Not applicable
Cradle movement speed	3 degrees/s	Not applicable

16.14 Accessories and Detachable Parts

This section provides details of accessories and detachable parts that can be used with the system.

Item		Identification [1]
Additional table accessory rail		4598 007 4199X
Anti-scatter grids	FD12	9896 010 6943X
	FD15	9896 010 6905X
	FD20	9896 010 6904X

Item		Identification [1]
Arm supports	Set of elbow supports	4598 007 0274X
	Arm support board	4598 007 5903X
	Height-adjustable arm support	4598 007 5211X
	Shoulder support board	4598 008 2855X
Cable supports		4598 006 5949X
Drip stand		9896 002 0633X
Filters	Cerebral filter	9896 001 3362X
	Peripheral X-ray filter	9896 000 3241X
Head support		4598 007 4807X
Mattresses	Standard mattress for Azurion series 3	4598 007 0777X
	Standard mattress for Azurion series 7	4598 011 1020X
	Cardio mattress for Azurion series 3	4598 007 0780X
	Cardio mattress for Azurion series 7	4598 011 1021X
	Neuro mattress for Azurion series 3	4598 007 0778X
	Neuro mattress for Azurion series 7	4598 011 1023X
Mouse table		4598 007 4805X
Neuro wedge		4598 007 9790X
Pan handle		4598 007 4803X
Ratchet compressor		4598-007-2220X
Table accessory rail clamps		9896 002 0461X
Table tilt and cradle accessories	Patient straps	9896 002 0453X
	Handgrip and clamp set	4598 007 4462X
Table-mounted radiation shield		9896 000 7720X
Viewpad	Cardio	4598 006 7815X
	Vascular	4598 006 7818X
Wireless mouse		4598 004 7453X
XperGuide laser tool		9896 002 1207X

[1] X can be any number between 1 and 9.

16.14.1 XperGuide Laser Tool

XperGuide Laser Tool Specification

Item	Specification
Type	Laser with affixed optics to convert it into a crosshair laser
Laser classification	IEC 60825-1:2007 Class 1 Laser Product
Wavelength	635 nm
Power output assembly	<0.4 mW
Weight (including laser, holder, and battery)	0.3 kg

The following statement on compliance applies to the XperGuide laser tool:

- Complies with FDA performance standards for laser products except for deviations pursuant to Laser Notice 50, dated June 24, 2007.

Guidance for Using the XperGuide Laser Tool

- Avoid exposing eyes to the laser at any time.
- Do not use the laser tool for investigation. The laser tool is for alignment only.
- The laser tool contains a laser with the IEC classification Class 1 Laser Product.

XperGuide Laser Tool Charger

The charger of the XperGuide laser tool is classified as Class II according to IEC 60601-1.

16.15 Wireless Foot Switch

The specifications that apply depend on the model of your foot switch. For more information about the model types, see *Equipment Labels* (page 367) (refer to the wireless foot switch labels in that section).

Item	Type 1 Specification	Type 2 Specification
Frequency range	2.4000 GHz to 2.4835 GHz	2402 MHz to 2480 MHz
Channel spacing	500 KHz	2 MHz
Modulation	2-FSK, MSK	Gaussian Frequency Shift Keying (GFSK) Adaptive frequency-hopping on 40 channels
Range	10 m in open field	10 m in open field
Conformity	• Europe: EN 300440, EN 301489, EN 60950, EN 50371 • USA: FCC Part 15C, single modular, FCC identifier XK5-SW100AMBINT • Canada: RSS-210 Issue 7, 5158A-SW100AMBINT	• Europe: EN 301489, EN 300328 v2.1.1, EN 60950-1, FCC 15.247 • USA: FCC, Part 15B, single Modular, FCC Identifier: XK5-SW24LE • Canada: RSS-210 Issue 7, 5158A-SW24LE

The system reaction time is up to 80 ms longer when the wireless foot switch is used, compared to using the hand switch or the wired foot switch.

16.16 Ceiling-Suspended Radiation Shield

The ceiling suspended radiation shield comprises:

- 75/90 cm counter-balanced, two-section suspension arm
- 40 x 50 cm tiltable lead acrylic shield, lead equivalence 0.5 mm Pb
- 35 x 50 cm lead apron, lead equivalence 0.5 mm Pb.

The total weight of the radiation shield and arm is 19 kg.

Accessory Bracket

The accessory bracket for mounting the ceiling suspended radiation shield comprises:

- Mounting spigot with a 32 mm diameter groove for securing the ceiling suspended radiation shield.
- Mechanical rating: 200 Nm maximum.

16.17 Wall Connection Box

The wall connection box provides galvanic isolated connections between the system and external equipment. Galvanic isolation ensures that the power source and grounding of the system and external equipment remain separated.

NOTE ***Cables to connect external equipment are supplied with the Wall connection box.***

The wall connection box provides the following interfaces.

Video Connection

Item	Specification
Standard	DVI 1.0
Connector type	DVI-I
Cable length (external equipment side)	3 m DVI-I to DVI-I cable 3 m VGA to DVI-I cable
Supported resolutions	Up to 1920 x 1200 x 60 Hz (WUXGA)
Supported clock frequencies	25-165 MHz
DVI lanes supported	1
Supported features	EDID / DDC2, Hot Plug Detect optional

USB Connection (Optional)

Specification	
Standard	USB 1.1
Supported speeds	Normal speed and full speed (maximum 12 Mbps)
Cable length (external equipment side)	3 m

Ethernet Connection

Specification	
Standard	IEEE Std. 802.3u/x (1000 Mbps)
Connector type	RJ45 shielded, CAT7 compliant
Cable length (external equipment side)	3 m

AC Power Input

Specification	
Cable length (molded cable for EU and US)	3 m
Un (nominal voltage rating)	100 – 240 V
In (nominal current rating)	1 A
Fn (nominal frequency rating)	50 / 60 Hz
Sn (nominal apparent power rating)	40 VA
Fuse	1 A slow blow
Pollution degree	2

DC Power Output

Specification	
Cable length	30 m

Specification	
Voltage	5 V
Amperage	1 A

Wall Connection Box in the Examination Room

The wall connection box in the examination room should be mounted with the external interface connectors facing downwards.

16.18 Network Data

NOTE ***Transfer speeds depend on the local situation (network load, network devices, and the external station).***

DICOM Image Interface

Item	Specification
Maximum Ethernet transfer speed	1 Gbit/s
Transfer speed for images	2 Mbit/s

RIS/CIS DICOM Interface

Item	Specification
Maximum Ethernet transfer speed	1 Gbit/s

16.19 System Settings Influencing the Radiation Dose

The following sections provide additional information about system settings that influence the radiation dose.

You should also refer to the radiation guidelines given in *Radiation Safety* (page 22) for measures to reduce patient and staff dose, and to shield stray radiation.

16.19.1 X-ray Protocol Selection

The parameters as preset by X-ray protocol selection are related to each other, and they have been tuned for an optimal image quality for a specific procedure.

Examples of these parameters are:

- Dose control mode (cine, test shot-lockin, XperCT, etc).
- Timing mode (series, single-shot for cardiac, vascular).
- Dose control curve (for kV, mA, ms, detector-dose).
- Requested detector dose rate – for fluoroscopy only.
- Requested detector dose per image – for exposure only.
- Fluoroscopy frame speed (per fluoroscopy flavor).
- Exposure frame speed (e.g. for cardiac procedures 7.5, 15, or 30 fps).
- Multiphase settings (e.g. for vascular procedure: the duration and frame speed per phase).
- Spectral filter (mm Al + mm Cu).

The following examples give the reference air kerma values for typical cardiac, neuro, and vascular X-ray protocols.

System	X-ray Protocol			Ref. AK (mGy/img)
C12/F12	Pediatric	Pediatrics	15 fps Normal	0.195
	Cardiac	Pediatrics	15 fps Normal	0.196
	Head	Cerebral	2 fps Normal	5.051
	Head	Cerebral	4 fps Normal	5.049
	Thorax	Lungs	3 fps	2.522
C12/F12 with ClarityIQ (option)	Cardio Pediatric	<40 kg Cine	15 fps Low	0.019
	Cardio Pediatric	>40 kg Cine	15 fps Low	0.037
	Cardiac	Left Coronary	15 fps Low	0.036
	Cerebral	Cerebral	2 fps Low	0.978
	Cerebral	Cerebral	4 fps Low	0.978
	Thorax	Lungs	3 fps	1.208

Measurement conditions: patient type: default, field size: 30 cm. All other settings in accordance with *Reference Air Kerma Measurement Setup* (page 349).

System	X-ray Protocol			Ref. AK (mGy/img)
F15	Pediatric	Pediatrics	15 fps Normal	0.126
	Cardiac	Pediatrics	15 fps Normal	0.125
	Head	Cerebral	2 fps Normal	2.785
	Head	Cerebral	4 fps Normal	2.784
	Thorax	Lungs	3 fps	4.312
F15 with ClarityIQ (option)	Cardio Pediatric	<40 kg Cine	15 fps Low	0.012
	Cardio Pediatric	>40 kg Cine	15 fps Low	0.023
	Cardiac	Left Coronary	15 fps Low	0.023
	Cerebral	Cerebral	2 fps Low	0.573
	Cerebral	Cerebral	4 fps Low	0.572
	Thorax	Lungs	3 fps	0.700

Measurement conditions: patient type: default, field size: 30 cm. All other settings in accordance with *Reference Air Kerma Measurement Setup* (page 349).

System	X-ray Protocol			Ref. AK (mGy/img)
C20/F20	Pediatric	Pediatrics	15 fps Normal	0.105
	Cardiac	Pediatrics	15 fps Normal	0.102
	Head	Cerebral	2 fps Normal	2.279
	Head	Cerebral	4 fps Normal	2.280
	Thorax	Lungs	3 fps	1.140
C20/F20 with ClarityIQ (option)	Cardio Pediatric	<40 kg Cine	15 fps Low	0.010
	Cardio Pediatric	>40 kg Cine	15 fps Low	0.019
	Cardiac	Left Coronary	15 fps Low	0.018
	Head	Cerebral	2 fps Low	0.463
	Head	Cerebral	4 fps Low	0.463
	Thorax	Subclavian	3 fps	0.795

Measurement conditions: patient type: default, field size: 30 cm. All other settings in accordance with *Reference Air Kerma Measurement Setup* (page 349).

The following examples give the reference air kerma rate for the three fluoroscopy flavors for a typical cardiac X-ray protocol.

System	X-ray Protocol	Flavor	Ref. AK-rate (mGy/s)
C12/F12	Pediatric	Low	0.183
	Pediatric	Normal	0.434
	Pediatric	High	0.684
	Cardiac	Low	0.238
	Cardiac	Normal	0.517
	Cardiac	High	0.719
C12/F12 with ClarityIQ (option)	Cardio Pediatric	Low	0.061
	Cardio Pediatric	Medium	0.092
	Cardio Pediatric	Normal	0.144
	Cardiac	Low	0.145
	Cardiac	Medium	0.214
	Cardiac	Normal	0.501

Measurement conditions: patient type: default, field size: 30 cm. All other settings in accordance with *Reference Air Kerma Measurement Setup* (page 349).

System	X-ray Protocol	Flavor	Ref. AK-rate (mGy/s)
F15	Pediatric	Low	0.112
	Pediatric	Normal	0.246
	Pediatric	High	0.412
	Cardiac	Low	0.121
	Cardiac	Normal	0.353
	Cardiac	High	0.421
F15 with ClarityIQ (option)	Cardio Pediatric	Low	0.038
	Cardio Pediatric	Medium	0.057
	Cardio Pediatric	Normal	0.087
	Cardiac	Low	0.090
	Cardiac	Medium	0.132
	Cardiac	Normal	0.322

Measurement conditions: patient type: default, field size: 30 cm. All other settings in accordance with *Reference Air Kerma Measurement Setup* (page 349).

System	X-ray Protocol	Flavor	Ref. AK-rate (mGy/s)
C20/F20	Pediatric	Low	0.096
	Pediatric	Normal	0.217
	Pediatric	High	0.384
	Cardiac	Low	0.101
	Cardiac	Normal	0.296
	Cardiac	High	0.366
C20/F20 with ClarityIQ (option)	Cardio Pediatric	Low	0.032
	Cardio Pediatric	Medium	0.048
	Cardio Pediatric	Normal	0.074
	Cardiac	Low	0.076
	Cardiac	Medium	0.113
	Cardiac	Normal	0.271

Measurement conditions: patient type: default, field size: 30 cm. All other settings in accordance with *Reference Air Kerma Measurement Setup* (page 349).

For an overview of a number of frequently used exposure procedures and fluoroscopy flavors, under defined measurement conditions, see *Typical Reference Air Kerma (Rate) Values* (page 302).

Patient Type

Although the system has an automatic dose control mechanism that compensates for the various depths of irradiated tissue, in some cases the image quality needs to be improved for very obese or very thin patients. This is achieved by the system by removing or adding spectral filtering.

The patient type selection may have an effect on the resulting reference air kerma. For optimal image quality, you should select a patient type that matches the actual patient thickness. You can change the patient type by editing the scheduled study. For more information about editing study details, see *Editing a Scheduled Study* (page 53).

You can select one of the following patient types:

Patient Type	Weight
Neonate	<5 kg
Infant	5 - 15 kg
Child	15 - 40 kg
Small Adult	40 - 55 kg
Normal Adult	55 - 70 kg
Large Adult	70 - 90 kg
Very Large Adult	>90 kg

The table above provides guidance for manual patient type selection. You can also select the **Automatic** patient type. In this case the system automatically selects an appropriate patient type for each study based on the patient's age, height, and weight, which can be entered while scheduling the patient.

For some applications and procedures, the dose settings are equal for all patient types. In these cases the automatic dose control mechanism manages all depths of irradiated tissue without loss of image quality, and the patient type selection has no effect on the reference air kerma (rate). Examples are: fluoroscopy, roadmap, and vascular peripheral. The settings for the default patient type are used if no specific X-ray protocols are defined for the selected patient type.

For other applications and procedures, the patient type selection will influence the reference air kerma. See the following example for cardiac procedures:

System	Patient Type	Ref. AK (mGy/img)
C12/F12 • Cardiac procedure • Left Coronary • 15 fps Normal	Neonate	0.041
	Infant	0.074
	Child, Small Adult	0.117
	Default	0.196
	Large Adult, Very Large Adult	0.197
C12/F12 • Pediatrics procedure • Pediatric • 15 fps Normal	Neonate	0.043
	Infant	0.074
	Child, Small Adult	0.115
	Default	0.195

Measurement conditions: field size: 30 cm. All other settings in accordance with *Reference Air Kerma Measurement Setup* (page 349).

System	Patient Type	Ref. AK (mGy/img)
F15 • Cardiac procedure • Left Coronary • 15 fps Normal	Neonate	0.024
	Infant	0.046
	Child, Small Adult	0.072
	Default	0.125
	Large Adult, Very Large Adult	0.110
F15 • Pediatrics procedure • Pediatric • 15 fps Normal	Neonate	0.024
	Infant	0.039
	Child, Small Adult	0.072
	Default	0.126

Measurement conditions: field size: 30 cm. All other settings in accordance with *Reference Air Kerma Measurement Setup* (page 349).

System	Patient Type	Ref. AK (mGy/img)
C20/F20 • Cardiac procedure • Left Coronary • 15 fps Normal	Neonate	0.020
	Infant	0.039
	Child, Small Adult	0.059
	Default	0.102
	Large Adult, Very Large Adult	0.089
C20/F20 • Pediatrics procedure • Pediatric • 15 fps Normal	Neonate	0.021
	Infant	0.034
	Child, Small Adult	0.061
	Default	0.105

Measurement conditions: field size: 30 cm. All other settings in accordance with *Reference Air Kerma Measurement Setup* (page 349).

For more information about the influence of patient thickness on the air kerma, see *Influence of Oblique Projections* (page 298).

Field Size

In general, the requested detector dose needs to be larger for smaller field sizes to compensate for increasing perceived noise at smaller field sizes. Therefore, the air kerma and air kerma rate will be larger for smaller field sizes.

NOTE ***Consider zooming fluoroscopy images with appropriate collimation, instead of using a small field size. Digital zooming does not influence the air kerma.***

NOTE ***Unlike air kerma, dose area product decreases at smaller field sizes, so using a small field size decreases the risk of stochastic effects. For example, for pediatric procedures, a small field size may be more appropriate.***

For every fluoroscopy flavor and every exposure X-ray protocol a programmable dose ratio per field size and per X-ray plane is available. The dose ratio indicates per available field size the percentage detector dose increase, compared to the detector dose at the largest field size.

In the examples below, reference air kerma increases approximately proportionally with the dose ratio numbers. The same applies to reference air kerma rate for fluoroscopy. The measurement conditions used are in accordance with *Reference Air Kerma Measurement Setup* (page 349).

			Dose ratio (%)	100	110	130	155	185
C12/F12 System			Field Size (cm)	30	27	22	19	15
X-ray Protocol			Patient Type	Ref. AK (mGy/img)				
Head	Cerebral	2 fps Low	Default	0.978	1.086	1.304	1.582	1.934

			Dose ratio (%)	100	110	130	150	180	215	260
F15 System			Field Size (cm)	39	37	31	27	22	19	15
X-ray Protocol			Patient Type	Ref. AK (mGy/img)						
Head	Cerebral	2 fps Low	Default	0.573	0.631	0.754	0.885	1.076	1.315	1.625

			Dose ratio (%)	100	130	145	170	200	240	280	330
C20/F20 System			Field Size (cm)	48	42	37	31	27	22	19	15
X-ray Protocol			Patient Type	Ref. AK (mGy/img)							
Head	Cere-bral	2 fps Low	Default	0.463	0.605	0.677	0.798	0.946	1.149	1.358	1.620

NOTE ***The dose ratio numbers may differ per procedure and per fluoroscopy flavor.***

Multiphase Settings

The vascular exposure procedure contains the default duration and frame speed per phase.

For these procedures it is possible to manually change the frame speed and duration per phase. For more information about changing frame speed and duration, see *Changing Multiphase Acquisition Settings* (page 99).

The reference air kerma is defined per image and will not change at different frame speeds. However, the cumulative skin dose is directly related to the frame speed and so, if the frame speed in one phase is reduced by 50%, the cumulative skin dose in that phase is also reduced by 50%.

Conclusion: Consider lowering the frame speed, if possible.

Shutters and Wedges

When you apply proper collimation, direct irradiation of body parts not needed for the procedure is prevented.

This reduces the dose area product and the staff dose, although the reference air kerma and the (peak) skin dose are not influenced.

In general, for example, 25% collimation of the irradiated area will reduce the dose area product by 25%.

Using the wedges reduces the radiation intensity in a user-defined area and improves the image quality. The wedges also reduce the dose area product and the staff dose.

The amount of radiation that is reduced by the wedges depends, for example, on the amount of the image coverage by the wedges.

Source-to-Image Distance

When the source-to-image distance is increased by a factor x, the system increases the skin dose by a factor x^2 to maintain the requested detector dose.

Hence, the source-to-image distance should be kept to a minimum (for a given source skin distance), so that the requested detector dose is reached with as low as possible skin dose. This implies that the

source-to-image distance should be reduced so that the distance between the patient and the detector is as small as possible.

This also improves image sharpness and, when combined with collimation, causes less staff dose (decreased scatter).

Table Height

The table height at a constant source-to-image distance does not influence the reference air kerma (rate), and the indicated air kerma (rate) value, as these are only applicable at the patient entrance reference point.

To minimize the skin dose (rate), the X-ray source must be as far from the skin as possible.

Influence of Oblique Projections

Due to the absorption of radiation in human tissue, the X-ray field strength is reduced by a factor 2, approximately every 3 cm.

For example, if the patient thickness is 27 cm, the X-ray beam loses intensity within the body by a factor of 512 ($2^{(27/3)}$). This shows that a thicker patient requires a larger entrance dose than a thin patient, to obtain the same detector dose.

The same applies to oblique projections of the X-ray beam since an oblique view generally increases the perceived patient thickness. This can be seen in the figure below where distance *2* (oblique) is considerably larger than distance *1*.

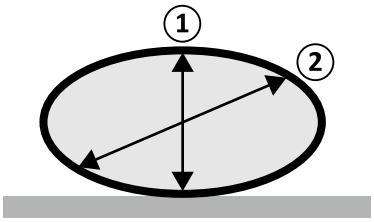

Figure 132 Patient thickness

The following examples show that the resulting air kerma is larger for a 30 cm PMMA than for a 20 cm PMMA patient thickness, when measured at the same system settings for three typical exposure procedures.

			Patient Thickness	20 cm PMMA	30 cm PMMA
System	X-ray Protocol			Ref. AK (mGy/ image)	AK (mGy/ image)
C12/F12	Cardiac	Left Coronary	15 fps Normal	0.196	0.912
	Head	Cerebral	2 fps Normal	5.051	14.068
	Thorax	Lungs	3 fps	2.522	7.491
C12/F12 with ClarityIQ (option)	Cardiac	Left Coronary	15 fps Low	0.036	0.200
	Head	Cerebral	2 fps Low	0.978	6.749
	Thorax	Lungs	3 fps	1.208	6.460

System	X-ray Protocol		Patient Thickness	20 cm PMMA Ref. AK (mGy/image)	30 cm PMMA AK (mGy/image)
F15	Cardiac	Left Coronary	15 fps Normal	0.125	0.600
	Head	Cerebral	2 fps Normal	2.785	12.919
	Thorax	Lungs	3 fps	1.399	5.208
F15 with ClarityIQ (option)	Cardiac	Left Coronary	15 fps Low	0.023	0.123
	Head	Cerebral	2 fps Low	0.573	4.018
	Thorax	Lungs	3 fps	0.700	4.119

System	X-ray Protocol		Patient Thickness	20 cm PMMA Ref. AK (mGy/image)	30 cm PMMA AK (mGy/image)
C20/F20	Cardiac	Left Coronary	15 fps Normal	0.102	0.558
	Head	Cerebral	2 fps Normal	2.279	9.126
	Thorax	Lungs	3 fps	1.140	4.956
C20/F20 with ClarityIQ (option)	Cardiac	Left Coronary	15 fps Low	0.018	0.110
	Head	Cerebral	2 fps Low	0.463	3.765
	Thorax	Lungs	3 fps	0.569	3.861

Measurement conditions: patient type: default, field size: 30 cm. All other settings are in accordance with *Reference Air Kerma Measurement Setup* (page 349), except for the different phantom thicknesses.

16.19.2 Fluoroscopy and Exposure Time to Reach the 2 Gy Limit

To reduce the risk of skin injuries, it is important to know after approximately how much fluoroscopy or exposure time the 2 Gy air kerma value will be reached (according to IEC 60601-1-3:2008, 5.2.4.5b).

The time remaining until the 2 Gy limit is reached for each study is displayed in the status area. For more information, see *Status Area* (page 398).

The number of exposure frames to reach 2 Gy (assuming no fluoroscopy) can be calculated by dividing 2000 mGy by the reference air kerma value per frame (as given in *Typical Reference Air Kerma (Rate) Values* (page 302), in mGy/img, for some of the most frequently used procedures).

The duration to reach 2 Gy in minutes is determined by dividing the number of exposure frames by the frame rate (fps) of the procedure, and dividing this by 60.

For fluoroscopy, the duration to reach 2 Gy in minutes (assuming no exposures) is determined by dividing 2000 mGy by the reference air kerma rate given in *Typical Reference Air Kerma (Rate) Values* (page 302) and dividing this by 60.

The following example shows the number of exposures and time required to reach the 2 Gy limit, for a few typical exposure settings, and for a normal and an obese patient:

		Patient Thickness		20 cm PMMA			30 cm PMMA		
System	X-ray Protocol			Ref. AK (mGy/ image)	# Exp. Needed	Time at constant fps	Ref. AK (mGy/ img)	# Exp. Needed	Time at constant fps
C12/F12	Cardiac	Left Coronary	15 fps Normal	0.196	10185	11 min	0.912	2194	2.4 min
	Head	Cerebral	2 fps Normal	5.051	396	3.3 min	14.068	142	1.2 min
	Head	Cerebral	4 fps Normal	5.049	396	1.7 min	15.413	130	0.5 min
	Thorax	Lungs	3 fps	2.522	793	4.4 min	7.491	267	1.5 min
C12/F12 with ClarityIQ (option)	Cardiac	Left Coronary	15 fps Low	0.036	55221	61.4 min	0.200	10022	11.1 min
	Head	Cerebral	2 fps Low	0.978	2045	17 min	6.749	296	2.5 min
	Head	Cerebral	4 fps Low	0.978	2044	8.5 min	6.749	296	1.2 min
	Thorax	Lungs	3 fps	1.208	1656	9.2 min	6.460	310	1.7 min

		Patient Thickness		20 cm PMMA			30 cm PMMA		
System	X-ray Protocol			Ref. AK (mGy/ image)	# Exp. Needed	Time at constant fps	Ref. AK (mGy/ img)	# Exp. Needed	Time at constant fps
F15	Cardiac	Left Coronary	15 fps Normal	0.125	16044	17.8 min	0.600	3335	3.7 min
	Head	Cerebral	2 fps Normal	2.785	718	6 min	9.478	211	1.8 min
	Head	Cerebral	4 fps Normal	2.784	718	5 min	9.843	203	0.8 min
	Thorax	Lungs	3 fps	4.312	464	2.6 min	5.208	384	2.1 min
F15 with ClarityIQ (option)	Cardiac	Left Coronary	15 fps Low	0.023	88265	98.1 min	0.123	16281	18.1 min
	Head	Cerebral	2 fps Low	0.573	3490	29.1 min	4.018	498	4,1 min
	Head	Cerebral	4 fps Low	0.572	3494	14.6 min	3.504	571	2.4 min
	Thorax	Lungs	3 fps	0.700	2856	15.9 min	4.119	486	2.7 min

		Patient Thickness		20 cm PMMA			30 cm PMMA		
System	X-ray Protocol			Ref. AK (mGy/ image)	# Exp. Needed	Time at constant fps	Ref. AK (mGy/ img)	# Exp. Needed	Time at constant fps
C20/F20	Cardiac	Left Coronary	15 fps Normal	0.102	19515	21.7 min	0.558	3585	4.0 min
	Head	Cerebral	2 fps Normal	2.279	877	7.3 min	12.305	163	1.4 min
	Head	Cerebral	4 fps Normal	2.280	877	3.7 min	10.064	199	0,8 min
	Thorax	Lungs	3 fps	1.140	1754	9.7 min	4.956	404	2.2 min

System	Patient Thickness X-ray Protocol			20 cm PMMA Ref. AK (mGy/ image)	20 cm PMMA # Exp. Needed	20 cm PMMA Time at constant fps	30 cm PMMA Ref. AK (mGy/ img)	30 cm PMMA # Exp. Needed	30 cm PMMA Time at constant fps
C20/F20 with ClarityIQ (option)	Cardiac	Left Coronary	15 fps Low	0.018	108243	120.3 min	0.110	18141	20.2 min
	Head	Cerebral	2 fps Low	0.463	4321	36 min	3.765	531	4.4 min
	Head	Cerebral	4 fps Low	0.463	4323	18 min	3.283	609	2.5 min
	Thorax	Lungs	3 fps	0.569	3512	19.5 min	3.861	518	2.9 min

The following examples show the time required to reach the 2 Gy limit, for a few typical fluoroscopy flavor settings, and for a normal and an obese patient:

System	Patient Thickness X-ray Protocol	Flavor	20 cm PMMA Ref. AK-rate (mGy/s)	20 cm PMMA Time required	30 cm PMMA Ref. AK-rate (mGy/s)	30 cm PMMA Time required
C12/F12	Cardiac	Low	0.238	140 min	1.358	25 min
	Cardiac	Normal	0.517	64 min	2.251	15 min
	Head	Low	0.189	177 min	0.878	38 min
C12/F12 with ClarityIQ (option)	Cardiac	Low	0.145	231 min	0.644	52 min
	Cardiac	Normal	0.501	67 min	2.269	15 min
	Head	Low	0.185	181 min	0.431	77 min

Measurement conditions: patient type: default, field size: 30 cm. All other settings are in accordance with *Reference Air Kerma Measurement Setup* (page 349).

System	Patient Thickness X-ray Protocol	Flavor	20 cm PMMA Ref. AK-rate (mGy/s)	20 cm PMMA Time required	30 cm PMMA Ref. AK-rate (mGy/s)	30 cm PMMA Time required
F15	Cardiac	Low	0.121	275 min	0.725	46 min
	Cardiac	Normal	0.353	94 min	1.446	23 min
	Head	Low	0.169	197 min	0.722	46 min
F15 with ClarityIQ (option)	Cardiac	Low	0.090	370 min	0.421	79 min
	Cardiac	Normal	0.322	104 min	1.525	22 min
	Head	Low	0.121	275 min	0.362	92 min

Measurement conditions: patient type: default, field size: 30 cm. All other settings are in accordance with *Reference Air Kerma Measurement Setup* (page 349).

System	Patient Thickness X-ray Protocol	Flavor	20 cm PMMA Ref. AK-rate (mGy/s)	20 cm PMMA Time required	30 cm PMMA Ref. AK-rate (mGy/s)	30 cm PMMA Time required
C20/F20	Cardiac	Low	0.101	330 min	0.656	51 min
	Cardiac	Normal	0.296	113 min	1.328	25 min
	Head	Low	0.366	91 min	0.601	55 min
C20/F20 with ClarityIQ (option)	Cardiac	Low	0.076	437 min	0.387	86 min
	Cardiac	Normal	0.113	295 min	1.415	24 min
	Head	Low	0.271	123 min	0.363	92 min

Measurement conditions: patient type: default, field size: 30 cm. All other settings are in accordance with *Reference Air Kerma Measurement Setup* (page 349).

Conclusion: The time to reach the 2 Gy limit is longer when the patient thickness decreases.

NOTE ***As the total dose is a combination of exposure and fluoroscopy, the total time to reach 2 Gy for each will be less than calculated above.***

16.19.3 Source-to-Skin Distance Spacer

The system can be equipped with a spacer on the X-ray tube housing, around the X-ray beam, which will maintain, a minimum source-to-skin distance of 38 cm. According to 21 CFR 1020.32(g), the spacer is mandatory in the USA.

For specific surgical applications, which require a source-to-skin distance of less than 38 cm, the spacer can be removed. The spacer must be re-installed when the surgical application has been completed.

WARNING
Removing the source-to-skin distance spacer may increase the skin dose by 60%, when the X-ray source is placed against the patient's skin.

The source-to-skin distance without the spacer is 30 cm, which conforms with international standards IEC 60601-2-43:2010, and IEC 60601-2-54:2009.

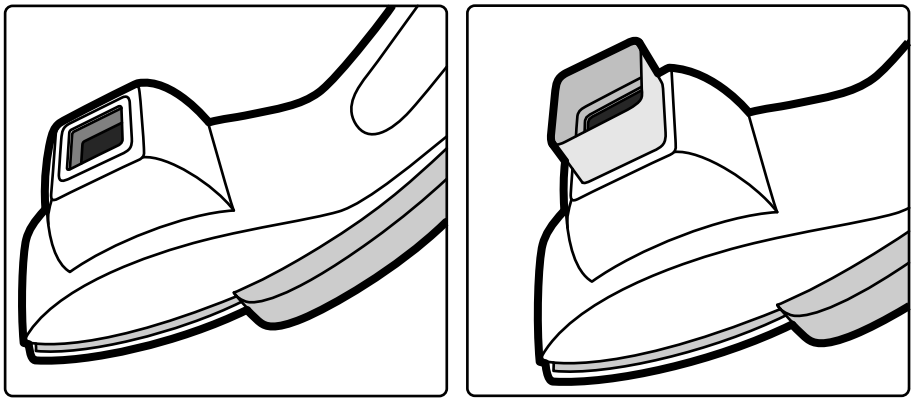

Figure 133 C-arm stand without a spacer (left) and with spacer (right)

16.20 Typical Reference Air Kerma (Rate) Values

In accordance with IEC 60601-2-43, these Instructions for Use specify the Reference Air Kerma (Rate) values for a number of frequently used X-ray protocols and the levels of protection provided by the system against stray radiation. All dose values are automatically determined by the system, based on the X-ray protocol selected.

This section gives the actual reference air kerma (rate) values for a number of frequently used X-ray protocols and fluoroscopy flavors.

The measuring conditions are as defined in *Reference Air Kerma Measurement Setup* (page 349). The values are only applicable for the factory default X-ray protocol settings, without overrides.

All given reference air kerma (rate) values have an accuracy of ±50%, in accordance with IEC 60601-2-43:2010 203.5.2.4.5.101c.

16.20.1 Monoplane C12/F12 Systems

Radioscopy (Fluoroscopy) - C12/F12

		Field of View	0	1	2	3	4
		Field Size (cm)	30	27	22	19	15
Procedure	Flavor	Patient Type	Reference Air Kerma (mGy/s)				
Cardio	Low	Default	0.233	0.254	0.296	0.349	0.420
	Norm	Default	0.512	0.664	0.850	0.861	0.876
	High	Default	0.709	0.770	0.884	1.026	1.183
Pediatrics	Low	Default	0.183	0.199	0.233	0.276	0.328
	Norm	Default	0.433	0.470	0.539	0.611	0.698
	High	Default	0.684	0.731	0.792	0.864	0.951
EP	Low	Default	0.087	0.095	0.112	0.132	0.157
	Norm	Default	0.206	0.224	0.261	0.308	0.365
	High	Default	0.247	0.269	0.313	0.368	0.436
EP Biosense Carto	Low	Default	0.043	0.048	0.056	0.068	0.082
	Norm	Default	0.103	0.112	0.131	0.154	0.184
	High	Default	0.123	0.135	0.157	0.184	0.218
Head	Low	Default	0.184	0.252	0.291	0.299	0.310
	Norm	Default	0.472	0.503	0.565	0.641	0.734
	High	Default	0.753	0.815	0.937	1.094	1.278
Spine	Low	Default	0.184	0.252	0.291	0.299	0.310
	Norm	Default	0.472	0.503	0.565	0.641	0.734
	High	Default	0.753	0.815	0.937	1.094	1.278
Thorax	Low	Default	0.184	0.252	0.291	0.299	0.310
	Norm	Default	0.472	0.503	0.565	0.641	0.734
	High	Default	0.753	0.815	0.937	1.094	1.278
Abdomen	Low	Default	0.184	0.252	0.291	0.299	0.310
	Norm	Default	0.472	0.503	0.565	0.641	0.734
	High	Default	0.753	0.815	0.937	1.094	1.278
Peripheral	Low	Default	0.184	0.252	0.291	0.299	0.310
	Norm	Default	0.472	0.503	0.565	0.641	0.734
	High	Default	0.753	0.815	0.937	1.094	1.278

Radiography (Exposure) - C12/F12

		Field of View	0	1	2	3	4
		Field Size (cm)	30	27	22	19	15
Procedure	X-ray Protocol	Patient Type	Reference Air Kerma (mGy/image)				
Cardio	Left Coronary 15 fps Low	Default	0.104	0.113	0.130	0.152	0.178
		Infant	0.074	0.079	0.088	0.099	0.114
		Large Adult, Very Large Adult	0.104	0.113	0.130	0.152	0.178
		Neonate	0.040	0.044	0.051	0.062	0.074
	Rotational Scan Prop Ang0 4s	Default	0.195	0.212	0.244	0.282	0.329
		Infant	0.063	0.068	0.078	0.090	0.106
		Neonate	0.040	0.044	0.051	0.062	0.074
Pediatrics	15 fps Contrast Normal	Default	0.195	0.212	0.244	0.282	0.329
		Child, Small Adult	0.115	0.125	0.145	0.169	0.198
		Infant	0.074	0.079	0.088	0.099	0.114
		Neonate	0.043	0.047	0.054	0.064	0.076
	Prop Free Position	Default	0.201	0.218	0.252	0.293	0.342
		Neonate, Infant	0.043	0.047	0.054	0.064	0.076
EP	15 fps	Default	0.115	0.125	0.145	0.169	0.198
	Prop 4s	Default	0.228	0.231	0.235	0.240	0.246
		Neonate, nfant	0.148	0.150	0.152	0.156	0.161
		Large Adult, Very Large Adult	0.228	0.231	0.235	0.240	0.246
EP Biosence Carto	7.5 fps low	Default	0.017	0.018	0.021	0.026	0.031
	3D EP Prop 4s	Default	0.228	0.231	0.235	0.240	0.246
		Neonate, Infant	0.148	0.150	0.152	0.156	0.161
		Large Adult, Very Large Adult	0.228	0.231	0.235	0.240	0.246
Head	Cerebral 2 fps normal	Default	4.895	5.436	6.540	7.701	8.502
		Child	3.153	3.378	3.820	4.379	5.072
		Neonate, Infant	3.153	3.378	3.820	4.379	5.072
	Aortic Arch 3 fps	Default	7.304	8.113	9.713	11.788	12.894
Spine	4 fps	Default	2.050	2.279	2.739	3.335	4.088
	2 fps	Default	2.566	2.851	3.428	4.172	5.113
Thorax	Lungs 2 fps	Default	2.446	2.719	3.269	3.950	4.361
	Subclavian 3 fps	Default	9.046	10.673	10.810	10.972	11.183
Abdomen	Abdomen	Default	3.824	4.242	5.101	6.198	7.578
	3 fps	Large Adult, Very Large Adult	3.317	3.681	4.434	5.398	6.620
	Iliac / Pelvis 3 fps	Default	7.297	8.108	9.730	11.842	14.472
Peripheral	Upper Legs 3 fps	Default	6.608	7.334	8.209	8.933	9.781
	Lower Legs 1 fps	Default	8.229	8.644	9.320	10.125	11.043

Roadmap - C12/F12

		Field of View	0	1	2	3	4
		Field Size (cm)	30	27	22	19	15
Procedure	Mode	Patient Type	Reference Air Kerma (mGy/image)				
Cardio	Navigate	Default	0.383	0.486	0.490	0.496	0.503
	UnSubtract	Default	0.383	0.486	0.490	0.496	0.503
Pediatrics	Navigate	Default	0.383	0.486	0.490	0.496	0.503
	UnSubtract	Default	0.383	0.486	0.490	0.496	0.503
EP	Navigate	Default	0.383	0.486	0.490	0.496	0.503
EP Biosense Carto	Navigate	Default	0.383	0.486	0.490	0.496	0.503
Head	Navigate	Default	0.383	0.486	0.490	0.496	0.503
	Carotid	Default	0.381	0.461	0.465	0.470	0.476
	Coil	Default	1.818	2.020	2.428	2.951	3.611
Spine	UnSubtract	Default	0.383	0.486	0.490	0.496	0.503
	Navigate	Default	0.383	0.486	0.490	0.496	0.503
	Stent	Default	0.381	0.461	0.465	0.470	0.476
Thorax	UnSubtract	Default	0.383	0.486	0.490	0.496	0.503
	Navigate	Default	0.383	0.486	0.490	0.496	0.503
	Intervention	Default	0.381	0.461	0.465	0.470	0.476
Abdomen	UnSubtract	Default	0.383	0.486	0.490	0.496	0.503
	Navigate	Default	0.383	0.486	0.490	0.496	0.503
	Stent	Default	0.381	0.461	0.465	0.470	0.476
Peripheral	UnSubtract	Default	0.383	0.486	0.490	0.496	0.503
	Navigate	Default	0.383	0.486	0.490	0.496	0.503

16.20.2 Monoplane C12/F12 Systems with ClarityIQ Option

Radioscopy (Fluoroscopy) - C12/F12 with ClarityIQ

		Field of View	0	1	2	3	4
		Field Size (cm)	30	27	22	19	15
Procedure	Flavor	Patient Type	Reference Air Kerma (mGy/s)				
Cardio Clarity	Low	Default	0.147	0.159	0.184	0.214	0.250
	Medium	Default	0.217	0.236	0.274	0.322	0.380
	Normal	Default	0.512	0.553	0.635	0.737	0.858
Cardio Pediatrics Clarity <40 kg	Low	Default	0.061	0.066	0.078	0.091	0.109
	Medium	Default	0.092	0.100	0.116	0.135	0.158
	Normal	Default	0.144	0.157	0.181	0.211	0.248
Cardio Pediatrics Clarity >40 kg	Low	Default	0.061	0.066	0.078	0.091	0.109
	Medium	Default	0.092	0.100	0.116	0.135	0.158
	Normal	Default	0.144	0.157	0.181	0.211	0.248
EP Clarity	Low	Default	0.044	0.047	0.055	0.064	0.073
	Medium	Default	0.086	0.094	0.109	0.127	0.147
	Normal	Default	0.106	0.116	0.135	0.159	0.189

Procedure	Flavor	Field of View / Field Size (cm) / Patient Type	0 30	1 27	2 22	3 19	4 15
			Reference Air Kerma (mGy/s)				
EP Biosense Clarity	Low	Default	0.044	0.047	0.055	0.064	0.073
	Medium	Default	0.086	0.094	0.109	0.127	0.147
	Normal	Default	0.106	0.116	0.135	0.159	0.189
Head Clarity	Low	Default	0.189	0.202	0.229	0.263	0.307
	Medium	Default	0.306	0.334	0.389	0.447	0.514
	Normal	Default	0.557	0.604	0.697	0.813	0.951
Spine Clarity	Low	Default	0.189	0.202	0.229	0.263	0.307
	Medium	Default	0.306	0.334	0.389	0.447	0.514
	Normal	Default	0.557	0.604	0.697	0.813	0.951
Thorax Clarity	Low	Default	0.189	0.202	0.229	0.263	0.307
	Medium	Default	0.306	0.334	0.389	0.447	0.514
	Normal	Default	0.557	0.604	0.697	0.813	0.951
Abdomen Clarity	Low	Default	0.189	0.202	0.229	0.263	0.307
	Medium	Default	0.306	0.334	0.389	0.447	0.514
	Normal	Default	0.557	0.604	0.697	0.813	0.951
Peripheral Clarity	Low	Default	0.147	0.159	0.184	0.214	0.250
	Medium	Default	0.217	0.236	0.274	0.322	0.380
	Normal	Default	0.512	0.553	0.635	0.737	0.858

Radiography (Exposure) - C12/F12 with ClarityIQ

Procedure	X-ray Protocol	Field of View / Field Size (cm) / Patient Type	0 30	1 27	2 22	3 19	4 15
			Reference Air Kerma (mGy/image)				
Cardio Clarity	Left Coronary 15 fps Low	Default	0.037	0.040	0.047	0.055	0.065
	Rotational Scan Prop Ang0 4s	Default	0.195	0.212	0.244	0.282	0.329
		Infant	0.063	0.068	0.078	0.090	0.106
		Neonate	0.040	0.044	0.051	0.062	0.074
Cardio Pediatrics Clarity <40 kg	15 fps Contrast low	Default	0.019	0.020	0.023	0.028	0.032
	15 fps Contrast normal	Default	0.030	0.033	0.039	0.046	0.055
Cardio Pediatrics Clarity >40 kg	15 fps Contrast low	Default	0.037	0.040	0.047	0.055	0.065
		Neonate, Infant, Child	0.019	0.020	0.023	0.028	0.032
	15 fps Contrast normal	Default	0.077	0.084	0.097	0.113	0.133
		Neonate, Infant, Child	0.030	0.033	0.039	0.046	0.055
EP Clarity	15 fps	Default	0.037	0.040	0.047	0.055	0.065
	Prop 4s	Default	0.228	0.231	0.235	0.240	0.246
		Neonate, Infant	0.148	0.150	0.152	0.156	0.161
		Large Adult, Very Large Adult	0.228	0.231	0.235	0.240	0.246

		Field of View	0	1	2	3	4
		Field Size (cm)	30	27	22	19	15
Procedure	X-ray Protocol	Patient Type	Reference Air Kerma (mGy/image)				
EP Biosense Clarity	7.5 fps	Default	0.037	0.040	0.047	0.055	0.065
	3D EP Prop 4s	Default	0.228	0.231	0.235	0.240	0.246
		Neonate, Infant	0.148	0.150	0.152	0.156	0.161
		Large Adult, Very Large Adult	0.228	0.231	0.235	0.240	0.246
Head Clarity	Cerebral 2 fps low	Default	0.990	1.099	1.318	1.602	1.953
	Aortic Arch 3 fps	Default	1.423	1.580	1.895	2.305	2.810
Spine Clarity	4 fps	Default	1.133	1.260	1.519	1.852	2.273
	2 fps	Default	1.134	1.260	1.518	1.853	2.273
Thorax Clarity	Lungs 2 fps	Default	1.221	1.357	1.630	1.986	2.432
	Subclavian 3 fps	Default	1.722	1.912	2.289	2.774	3.378
Abdomen Clarity	3 fps low	Default	0.797	0.884	1.060	1.285	1.569
	Iliac / Pelvis 3 fps	Default	3.890	4.322	5.202	6.340	7.138
Peripheral Clarity	Upper Legs 3 fps	Default	1.128	1.254	1.502	1.688	1.903
	Lower Legs 1 fps	Default	2.064	2.285	2.732	3.302	4.006

Roadmap - C12/F12 with ClarityIQ

		Field of View	0	1	2	3	4
		Field Size (cm)	30	27	22	19	15
Procedure	Mode	Patient Type	Reference Air Kerma (mGy/image)				
Cardio Clarity	Navigate	Default	0.175	0.188	0.213	0.243	0.279
	UnSubtract	Default	0.175	0.188	0.213	0.243	0.279
Cardio Pediatrics Clarity <40 kg	Navigate	Default	0.175	0.188	0.213	0.243	0.279
	UnSubtract	Default	0.175	0.188	0.213	0.243	0.279
Cardio Pediatrics Clarity >40 kg	Navigate	Default	0.175	0.188	0.213	0.243	0.279
	UnSubtract	Default	0.175	0.188	0.213	0.243	0.279
EP Clarity	Navigate	Default	0.175	0.188	0.213	0.243	0.279
	UnSubtract	Default	0.175	0.188	0.213	0.243	0.279
EP Biosense Clarity	Navigate	Default	0.175	0.188	0.213	0.243	0.279
	UnSubtract	Default	0.175	0.188	0.213	0.243	0.279
Head Clarity	Navigate	Default	0.175	0.188	0.213	0.243	0.279
	Coil	Default	0.335	0.372	0.447	0.542	0.661
	UnSubtract	Default	0.175	0.188	0.213	0.243	0.279
Spine Clarity	Navigate	Default	0.175	0.188	0.213	0.243	0.279
	Coil	Default	0.236	0.262	0.314	0.382	0.467
	UnSubtract	Default	0.175	0.188	0.213	0.243	0.279
Thorax Clarity	UnSubtract	Default	0.175	0.188	0.213	0.243	0.279
	Navigate	Default	0.175	0.188	0.213	0.243	0.279
Abdomen Clarity	UnSubtract	Default	0.175	0.188	0.213	0.243	0.279
	Navigate	Default	0.175	0.188	0.213	0.243	0.279
Peripheral Clarity	UnSubtract	Default	0.175	0.188	0.213	0.243	0.279
	Navigate	Default	0.175	0.188	0.213	0.243	0.279

16.20.3 Monoplane F15 Systems

Radioscopy (Fluoroscopy) - F15

		Field of View	0	1	2	3	4	5	6
		Field Size (cm)	39	37	31	27	22	19	15
Procedure	Flavor	Patient Type	Reference Air Kerma (mGy/s)						
Cardio	Low	Default	0.121	0.132	0.155	0.179	0.214	0.251	0.313
	Norm	Default	0.353	0.380	0.432	0.484	0.557	0.634	0.754
	High	Default	0.421	0.454	0.519	0.586	0.680	0.780	0.936
Pediatrics	Low	Default	0.112	0.121	0.140	0.161	0.190	0.227	0.274
	Norm	Default	0.246	0.266	0.307	0.349	0.403	0.466	0.546
	High	Default	0.412	0.440	0.494	0.549	0.626	0.712	0.786
EP	Low	Default	0.051	0.055	0.065	0.075	0.090	0.108	0.130
	Norm	Default	0.121	0.132	0.154	0.176	0.207	0.248	0.300
	High	Default	0.144	0.157	0.184	0.212	0.253	0.305	0.372
EP Biosense Carto	Low	Default	0.025	0.028	0.032	0.037	0.045	0.054	0.066
	Norm	Default	0.060	0.066	0.077	0.088	0.104	0.124	0.150
	High	Default	0.072	0.078	0.092	0.106	0.127	0.152	0.186
Head	Low	Default	0.169	0.183	0.214	0.246	0.293	0.355	0.435
	Norm	Default	0.287	0.309	0.356	0.403	0.473	0.550	0.640
	High	Default	0.388	0.417	0.477	0.537	0.624	0.728	0.859
Spine	Low	Default	0.132	0.143	0.166	0.191	0.227	0.273	0.334
	Norm	Default	0.285	0.307	0.354	0.401	0.470	0.547	0.636
	High	Default	0.473	0.508	0.583	0.657	0.763	0.892	1.054
Thorax	Low	Default	0.123	0.133	0.155	0.178	0.211	0.254	0.310
	Norm	Default	0.287	0.309	0.356	0.403	0.473	0.550	0.640
	High	Default	0.476	0.512	0.587	0.661	0.768	0.897	1.060
Abdomen	Low	Default	0.132	0.143	0.166	0.191	0.227	0.273	0.334
	Norm	Default	0.285	0.307	0.354	0.401	0.470	0.547	0.636
	High	Default	0.473	0.508	0.583	0.657	0.763	0.892	1.054
Peripheral	Low	Default	0.132	0.143	0.166	0.191	0.227	0.273	0.334
	Norm	Default	0.285	0.307	0.354	0.401	0.470	0.547	0.636
	High	Default	0.473	0.508	0.583	0.657	0.763	0.892	1.054

Radiography (Exposure) - F15

		Field of View	0	1	2	3	4	5	6
		Field Size (cm)	39	37	31	27	22	19	15
Procedure	X-ray Protocol	Patient Type	Reference Air Kerma (mGy/image)						
Cardio	Left Coronary	Default	0.064	0.069	0.080	0.091	0.106	0.125	0.148
	15 fps Low	Infant	0.046	0.049	0.055	0.060	0.068	0.078	0.090
		Large Adult, Very Large Adult	0.063	0.068	0.079	0.090	0.105	0.123	0.146
		Neonate	0.024	0.026	0.030	0.034	0.041	0.050	0.061
	Rotational Scan	Default	0.123	0.132	0.153	0.173	0.201	0.235	0.278
	Prop Ang0 4s	Infant	0.039	0.042	0.047	0.053	0.061	0.071	0.085
		Neonate	0.024	0.026	0.030	0.034	0.041	0.050	0.061
Pediatrics	15 fps Contrast Normal	Default	0.126	0.136	0.157	0.177	0.206	0.241	0.282
		Child, Small Adult	0.072	0.078	0.091	0.103	0.120	0.141	0.167
		Infant	0.039	0.042	0.047	0.053	0.062	0.072	0.086
		Neonate	0.024	0.026	0.030	0.035	0.041	0.050	0.062
	Prop Free Position	Default	0.122	0.131	0.151	0.172	0.201	0.235	0.276
		Neonate, Infant	0.027	0.029	0.033	0.037	0.043	0.050	0.060
EP	15 fps	Default	0.072	0.078	0.091	0.103	0.120	0.141	0.167
	15 fps	Default	0.072	0.078	0.091	0.103	0.120	0.141	0.167
EP Biosence Carto	7.5 fps low	Default	0.010	0.011	0.013	0.015	0.017	0.021	0.025
	15 fps normal	Default	0.072	0.078	0.091	0.103	0.120	0.141	0.167
Head	Cerebral 2 fps normal	Default	2.785	3.068	3.675	4.316	5.260	6.448	7.902
		Child	1.770	1.883	2.124	2.373	2.730	3.198	3.838
		Neonate, Infant	1.770	1.883	2.124	2.373	2.730	3.198	3.838
	Aortic Arch 3 fps	Default	4.312	4.750	5.671	6.635	6.729	6.880	7.020
Spine	4 fps	Default	1.172	1.291	1.548	1.815	2.214	2.714	3.365
	2 fps	Default	1.466	1.615	1.934	2.271	2.767	3.394	4.209
Thorax	Lungs 2 fps	Default	1.399	1.543	1.848	2.168	2.624	2.896	3.234
	Subclavian 3 fps	Default	5.338	5.881	7.014	8.201	9.940	11.254	11.316
Abdomen	Abdomen	Default	2.616	2.883	3.446	4.047	4.925	6.030	6.554
	3 fps	Large Adult, Very Large Adult	2.264	2.500	2.991	3.520	4.290	5.262	6.538
	Iliac / Pelvis 3 fps	Default	4.250	4.687	5.605	6.578	7.999	9.805	12.139
Peripheral	Upper Legs 3 fps	Default	3.784	4.169	4.974	5.551	6.044	6.621	7.326
	Lower Legs 1 fps	Default	4.732	5.209	5.774	6.193	6.737	7.343	8.098

Roadmap - F15

		Field of View	0	1	2	3	4	5	6
		Field Size (cm)	39	37	31	27	22	19	15
Procedure	Mode	Patient Type	Reference Air Kerma (mGy/image)						
Cardio	Navigate	Default	0.198	0.244	0.269	0.296	0.351	0.411	0.443
	UnSubtract	Default	0.198	0.244	0.269	0.296	0.351	0.411	0.443
Pediatrics	Navigate	Default	0.198	0.244	0.269	0.296	0.351	0.411	0.443
	UnSubtract	Default	0.198	0.244	0.269	0.296	0.351	0.411	0.443

		Field of View	0	1	2	3	4	5	6
		Field Size (cm)	39	37	31	27	22	19	15
Procedure	Mode	Patient Type	Reference Air Kerma (mGy/image)						
EP	Navigate	Default	0.198	0.244	0.269	0.296	0.351	0.411	0.443
EP Biosense Carto	Navigate	Default	0.198	0.244	0.269	0.296	0.351	0.411	0.443
Head	Navigate	Default	0.246	0.266	0.307	0.330	0.401	0.437	0.443
	Carotid	Default	0.212	0.225	0.252	0.279	0.318	0.342	0.347
	Coil	Default	1.064	1.171	1.401	1.645	2.001	2.450	3.037
Spine	UnSubtract	Default	0.246	0.266	0.307	0.330	0.401	0.437	0.443
	Navigate	Default	0.246	0.266	0.307	0.330	0.401	0.437	0.443
	Stent	Default	0.212	0.225	0.252	0.279	0.318	0.342	0.347
Thorax	UnSubtract	Default	0.246	0.266	0.307	0.330	0.401	0.437	0.443
	Navigate	Default	0.246	0.266	0.307	0.330	0.401	0.437	0.443
	Intervention	Default	0.212	0.225	0.252	0.279	0.318	0.342	0.347
Abdomen	UnSubtract	Default	0.246	0.266	0.307	0.330	0.401	0.437	0.443
	Navigate	Default	0.246	0.266	0.307	0.330	0.401	0.437	0.443
	Stent	Default	0.212	0.225	0.252	0.279	0.318	0.342	0.347
Peripheral	UnSubtract	Default	0.246	0.266	0.307	0.330	0.401	0.437	0.443
	Navigate	Default	0.246	0.266	0.307	0.330	0.401	0.437	0.443

16.20.4 Monoplane F15 Systems with ClarityIQ Option

Radioscopy (Fluoroscopy) - F15 with ClarityIQ

		Field of View	0	1	2	3	4	5	6
		Field Size (cm)	39	37	31	27	22	19	15
Procedure	Flavor	Patient Type	Reference Air Kerma (mGy/s)						
Cardio Clarity	Low	Default	0.090	0.098	0.112	0.127	0.149	0.175	0.206
	Medium	Default	0.132	0.142	0.165	0.187	0.220	0.259	0.310
	Normal	Default	0.322	0.346	0.397	0.447	0.517	0.604	0.710
Cardio Pediatrics Clarity <40 kg	Low	Default	0.038	0.041	0.047	0.054	0.063	0.075	0.090
	Medium	Default	0.057	0.061	0.071	0.081	0.096	0.114	0.136
	Normal	Default	0.087	0.094	0.109	0.125	0.146	0.172	0.204
Cardio Pediatrics Clarity >40 kg	Low	Default	0.038	0.041	0.047	0.054	0.063	0.075	0.090
	Medium	Default	0.057	0.061	0.071	0.081	0.096	0.114	0.136
	Normal	Default	0.087	0.094	0.109	0.125	0.146	0.172	0.204
EP Clarity	Low	Default	0.027	0.029	0.033	0.038	0.044	0.052	0.061
	Medium	Default	0.053	0.057	0.066	0.075	0.087	0.103	0.121
	Normal	Default	0.063	0.069	0.080	0.091	0.108	0.128	0.153
EP Biosense Clarity	Low	Default	0.027	0.029	0.033	0.038	0.044	0.052	0.061
	Medium	Default	0.053	0.057	0.066	0.075	0.087	0.103	0.121
	Normal	Default	0.063	0.069	0.080	0.091	0.108	0.128	0.153
Head Clarity	Low	Default	0.121	0.131	0.147	0.163	0.187	0.217	0.255
	Medium	Default	0.186	0.202	0.234	0.267	0.316	0.367	0.427
	Normal	Default	0.343	0.370	0.426	0.482	0.563	0.661	0.784

	Field of View	0	1	2	3	4	5	6
	Field Size (cm)	39	37	31	27	22	19	15
Procedure	Flavor / Patient Type	Reference Air Kerma (mGy/s)						
Spine Clarity	Low / Default	0.121	0.131	0.147	0.163	0.187	0.217	0.255
	Medium / Default	0.186	0.202	0.234	0.267	0.316	0.367	0.427
	Normal / Default	0.343	0.370	0.426	0.482	0.563	0.661	0.784
Thorax Clarity	Low / Default	0.121	0.131	0.147	0.163	0.187	0.217	0.255
	Medium / Default	0.186	0.202	0.234	0.267	0.316	0.367	0.427
	Normal / Default	0.343	0.370	0.426	0.482	0.563	0.661	0.784
Abdomen Clarity	Low / Default	0.121	0.131	0.147	0.163	0.187	0.217	0.255
	Medium / Default	0.186	0.202	0.234	0.267	0.316	0.367	0.427
	Normal / Default	0.343	0.370	0.426	0.482	0.563	0.661	0.784
Peripheral Clarity	Low / Default	0.090	0.098	0.112	0.127	0.149	0.175	0.206
	Medium / Default	0.132	0.142	0.165	0.187	0.220	0.259	0.310
	Normal / Default	0.322	0.346	0.397	0.447	0.517	0.604	0.710

Radiography (Exposure) - F15 with ClarityIQ

		Field of View	0	1	2	3	4	5	6
		Field Size (cm)	39	37	31	27	22	19	15
Procedure	X-ray Protocol	Patient Type	Reference Air Kerma (mGy/image)						
Cardio Clarity	Left Coronary 15 fps Low	Default	0.023	0.025	0.029	0.033	0.038	0.045	0.054
	Rotational Scan Prop Ang0 4s	Default	0.125	0.135	0.155	0.175	0.204	0.238	0.280
		Infant	0.039	0.042	0.047	0.053	0.061	0.071	0.085
		Neonate	0.024	0.026	0.030	0.034	0.041	0.050	0.061
Cardio Pedia-trics Clarity <40 kg	15 fps Contrast low	Default	0.012	0.013	0.015	0.017	0.020	0.023	0.028
	15 fps Contrast normal	Default	0.018	0.020	0.023	0.027	0.032	0.038	0.046
Cardio Pedia-trics Clarity >40 kg	15 fps Contrast low	Default	0.023	0.025	0.029	0.033	0.038	0.045	0.054
		Neonate, Infant, Child	0.012	0.013	0.015	0.017	0.020	0.023	0.028
	15 fps Contrast normal	Default	0.048	0.052	0.060	0.069	0.081	0.094	0.112
		Neonate, Infant, Child	0.018	0.020	0.023	0.027	0.032	0.038	0.046
EP Clarity	15 Fps	Default	0.023	0.025	0.029	0.033	0.038	0.045	0.054
EP Biosense Clarity	7.5 fps	Default	0.023	0.025	0.029	0.033	0.038	0.045	0.054
Head Clarity	Cerebral 2 fps low	Default	0.573	0.631	0.754	0.885	1.076	1.315	1.625
	Aortic Arch 3 fps	Default	0.817	0.900	1.076	1.261	1.534	1.876	2.319
Spine Clarity	4 fps	Default	0.492	0.542	0.651	0.766	0.933	1.150	1.429
	2 fps	Default	0.492	0.543	0.650	0.765	0.934	1.149	1.428
Thorax Clarity	Lungs 2 fps	Default	0.700	0.772	0.924	1.085	1.321	1.620	2.010
	Subclavian 3 fps	Default	0.988	1.090	1.301	1.523	1.848	2.253	2.773

		Field of View	0	1	2	3	4	5	6
		Field Size (cm)	39	37	31	27	22	19	15
Procedure	X-ray Protocol	Patient Type	Reference Air Kerma (mGy/image)						
Abdomen Clarity	3 fps low	Default	0.460	0.507	0.605	0.709	0.861	1.051	1.299
	Iliac / Pelvis 3 fps	Default	2.264	2.500	2.991	3.520	4.290	5.262	6.538
Peripheral Clarity	Upper Legs 3 fps	Default	0.641	0.706	0.827	0.923	1.059	1.216	1.390
	Lower Legs 1 fps	Default	1.184	1.303	1.553	1.812	2.132	2.402	2.730

Roadmap - F15 with ClarityIQ

		Field of View	0	1	2	3	4	5	6
		Field Size (cm)	39	37	31	27	22	19	15
Procedure	Mode	Patient Type	Reference Air Kerma (mGy/image)						
Cardio Clarity	Navigate	Default	0.096	0.103	0.117	0.130	0.150	0.174	0.203
	UnSubtract	Default	0.096	0.103	0.117	0.130	0.150	0.174	0.203
Cardio Pediatrics Clarity <40 kg	Navigate	Default	0.096	0.103	0.117	0.130	0.150	0.174	0.203
	UnSubtract	Default	0.096	0.103	0.117	0.130	0.150	0.174	0.203
Cardio Pediatrics Clarity >40 kg	Navigate	Default	0.096	0.103	0.117	0.130	0.150	0.174	0.203
	UnSubtract	Default	0.096	0.103	0.117	0.130	0.150	0.174	0.203
EP Clarity	Navigate	Default	0.096	0.103	0.117	0.130	0.150	0.174	0.203
	UnSubtract	Default	0.096	0.103	0.117	0.130	0.150	0.174	0.203
EP Biosense Clarity	Navigate	Default	0.096	0.103	0.117	0.130	0.150	0.174	0.203
	UnSubtract	Default	0.096	0.103	0.117	0.130	0.150	0.174	0.203
Head Clarity	Navigate	Default	0.096	0.103	0.117	0.130	0.150	0.174	0.203
	Coil	Default	0.192	0.211	0.253	0.296	0.360	0.441	0.544
	UnSubtract	Default	0.096	0.103	0.117	0.130	0.150	0.174	0.203
Spine Clarity	Navigate	Default	0.096	0.103	0.117	0.130	0.150	0.174	0.203
	Coil	Default	0.145	0.160	0.192	0.225	0.273	0.334	0.413
	UnSubtract	Default	0.096	0.103	0.117	0.130	0.150	0.174	0.203
Thorax Clarity	UnSubtract	Default	0.096	0.103	0.117	0.130	0.150	0.174	0.203
	Navigate	Default	0.096	0.103	0.117	0.130	0.150	0.174	0.203
Abdomen Clarity	UnSubtract	Default	0.096	0.103	0.117	0.130	0.150	0.174	0.203
	Navigate	Default	0.096	0.103	0.117	0.130	0.150	0.174	0.203
Peripheral Clarity	Navigate	Default	0.096	0.103	0.117	0.130	0.150	0.174	0.203
	UnSubtract	Default	0.096	0.103	0.117	0.130	0.150	0.174	0.203

16.20.5 Monoplane C20/F20 Systems

Radioscopy (Fluoroscopy) - C20/F20

		Field of View	0	1	2	3	4	5	6	7
		Field Size (cm)	48	42	37	31	27	22	19	15
Procedure	Flavor	Patient Type	Reference Air Kerma (mGy/s)							
Cardio	Low	Default	0.102	0.129	0.143	0.166	0.193	0.230	0.268	0.328
	Norm	Default	0.302	0.367	0.399	0.451	0.510	0.588	0.664	0.784
	High	Default	0.372	0.458	0.501	0.569	0.649	0.754	0.857	1.017
Pediatrics	Low	Default	0.096	0.119	0.131	0.150	0.173	0.205	0.237	0.273
	Norm	Default	0.217	0.269	0.294	0.336	0.386	0.450	0.503	0.584
	High	Default	0.384	0.463	0.499	0.558	0.625	0.688	0.743	0.826
EP	Low	Default	0.047	0.060	0.066	0.074	0.085	0.098	0.115	0.128
	Norm	Default	0.104	0.132	0.146	0.167	0.200	0.226	0.277	0.317
	High	Default	0.123	0.157	0.173	0.201	0.234	0.279	0.324	0.397
EP Biosense Carto	Low	Default	0.024	0.030	0.033	0.037	0.043	0.049	0.058	0.065
	Norm	Default	0.052	0.066	0.073	0.083	0.100	0.113	0.138	0.159
	High	Default	0.062	0.078	0.086	0.100	0.117	0.139	0.162	0.198
Head	Low	Default	0.113	0.141	0.155	0.178	0.206	0.236	0.267	0.299
	Norm	Default	0.244	0.301	0.329	0.376	0.448	0.532	0.594	0.662
	High	Default	0.406	0.495	0.541	0.615	0.701	0.814	0.927	1.105
Spine	Low	Default	0.113	0.141	0.155	0.178	0.206	0.236	0.267	0.299
	Norm	Default	0.244	0.301	0.329	0.376	0.448	0.532	0.594	0.662
	High	Default	0.406	0.495	0.541	0.615	0.701	0.814	0.927	1.105
Thorax	Low	Default	0.113	0.141	0.155	0.178	0.206	0.236	0.267	0.299
	Norm	Default	0.244	0.301	0.329	0.376	0.448	0.532	0.594	0.662
	High	Default	0.406	0.495	0.541	0.615	0.701	0.814	0.927	1.105
Abdomen	Low	Default	0.113	0.141	0.155	0.178	0.206	0.236	0.267	0.299
	Norm	Default	0.244	0.301	0.329	0.376	0.448	0.532	0.594	0.662
	High	Default	0.406	0.495	0.541	0.615	0.701	0.814	0.927	1.105
Peripheral	Low	Default	0.113	0.141	0.155	0.178	0.206	0.236	0.267	0.299
	Norm	Default	0.244	0.301	0.329	0.376	0.448	0.532	0.594	0.662
	High	Default	0.406	0.495	0.541	0.615	0.701	0.814	0.927	1.105

Radiography (Exposure) - C20/F20

Procedure	X-ray Protocol	Field of View / Field Size (cm) / Patient Type	0 48	1 42	2 37	3 31	4 27	5 22	6 19	7 15
			Reference Air Kerma (mGy/image)							
Cardio	Left Coronary	Default	0.053	0.066	0.073	0.083	0.096	0.112	0.128	0.153
	15 fps Low	Infant	0.039	0.048	0.052	0.057	0.064	0.072	0.080	0.093
		Large Adult, Very Large Adult	0.052	0.065	0.072	0.082	0.095	0.111	0.126	0.151
		Neonate	0.021	0.025	0.028	0.032	0.037	0.044	0.052	0.064
	Rotational Scan	Default	0.103	0.128	0.140	0.160	0.184	0.214	0.244	0.291
	Prop Ang0 4s	Infant	0.034	0.041	0.044	0.050	0.056	0.065	0.074	0.089
		Neonate	0.021	0.025	0.028	0.032	0.037	0.044	0.052	0.064
Pediatrics	15 fps Contrast Normal	Default	0.105	0.130	0.142	0.163	0.186	0.217	0.247	0.293
		Child, Small Adult	0.060	0.075	0.083	0.095	0.109	0.127	0.145	0.173
		Infant	0.034	0.041	0.044	0.050	0.056	0.065	0.074	0.089
		Neonate	0.021	0.025	0.028	0.032	0.037	0.044	0.052	0.064
	Prop Free Position	Default	0.101	0.127	0.139	0.159	0.182	0.213	0.243	0.289
		Neonate, Infant	0.023	0.028	0.030	0.034	0.039	0.046	0.052	0.063
EP	15 fps	Default	0.060	0.075	0.083	0.095	0.109	0.127	0.145	0.173
	Prop 4s	Default	0.115	0.147	0.184	0.186	0.188	0.190	0.193	0.196
		Neonate, Infant	0.073	0.095	0.120	0.121	0.123	0.125	0.127	0.129
		Large Adult, Very Large Adult	0.115	0.147	0.184	0.186	0.188	0.190	0.193	0.196
EP Biosence Carto	7.5 fps low	Default	0.009	0.011	0.013	0.014	0.016	0.018	0.022	0.024
	3D EP Prop 4s	Default	0.115	0.147	0.184	0.186	0.188	0.190	0.193	0.196
		Neonate, Infant	0.073	0.095	0.120	0.121	0.123	0.125	0.127	0.129
		Large Adult, Very Large Adult	0.115	0.147	0.184	0.186	0.188	0.190	0.193	0.196
Head	Cerebral 2 fps normal	Default	2.295	3.004	3.359	3.973	4.718	5.731	6.779	8.103
		Child	1.525	1.899	2.044	2.282	2.565	2.945	3.354	3.884
		Neonate, Infant	1.603	1.899	2.044	2.282	2.565	2.945	3.354	3.884
	Aortic Arch 3 fps	Default	3.505	4.585	5.127	6.061	7.047	7.121	7.210	7.299
Spine	4 fps	Default	0.963	1.259	1.408	1.664	1.976	2.403	2.842	3.554
	2 fps	Default	1.203	1.572	1.759	2.082	2.470	3.003	3.555	4.445
Thorax	Lungs 2 fps	Default	1.148	1.502	1.682	1.987	2.357	2.727	2.962	3.245
	Subclavian 3 fps	Default	4.318	5.645	6.318	7.456	8.830	10.706	11.747	12.554

Procedure	X-ray Protocol	Field of View / Field Size (cm) / Patient Type	0 / 48	1 / 42	2 / 37	3 / 31	4 / 27	5 / 22	6 / 19	7 / 15
			Reference Air Kerma (mGy/image)							
Abdomen	Abdomen	Default	2.140	2.799	3.131	3.699	4.389	5.335	6.304	6.395
	3 fps	Large Adult, Very Large Adult	1.856	2.431	2.719	3.214	3.817	4.643	5.496	6.877
	Iliac / Pelvis 3 fps	Default	3.476	4.546	5.089	6.010	7.138	8.669	10.255	12.255
Peripheral	Upper Legs 3 fps	Default	3.069	4.004	4.483	5.297	5.845	6.370	6.869	7.481
	Lower Legs 1 fps	Default	3.810	4.981	5.557	6.109	6.568	7.144	7.688	8.335

Roadmap - C20/F20

Procedure	Mode	Field of View / Field Size (cm) / Patient Type	0 / 48	1 / 42	2 / 37	3 / 31	4 / 27	5 / 22	6 / 19	7 / 15
			Reference Air Kerma (mGy/image)							
Cardio	Navigate	Default	0.207	0.257	0.280	0.320	0.366	0.423	0.456	0.460
	UnSubtract	Default	0.207	0.257	0.280	0.320	0.366	0.423	0.456	0.460
Pediatrics	Navigate	Default	0.207	0.257	0.280	0.320	0.366	0.423	0.456	0.460
	UnSubtract	Default	0.207	0.257	0.280	0.320	0.366	0.423	0.456	0.460
EP	Navigate	Default	0.207	0.257	0.280	0.320	0.366	0.423	0.456	0.460
EP Biosense Carto	Navigate	Default	0.207	0.257	0.280	0.320	0.366	0.423	0.456	0.460
Head	Navigate	Default	0.207	0.257	0.280	0.320	0.366	0.423	0.456	0.460
	Carotid	Default	0.184	0.219	0.236	0.263	0.294	0.334	0.355	0.358
	Coil	Default	0.869	1.137	1.273	1.504	1.784	2.167	2.559	3.203
Spine	UnSubtract	Default	0.207	0.257	0.280	0.320	0.366	0.423	0.456	0.460
	Navigate	Default	0.207	0.257	0.280	0.320	0.366	0.423	0.456	0.460
	Stent	Default	0.184	0.219	0.236	0.263	0.294	0.334	0.355	0.358
Thorax	UnSubtract	Default	0.207	0.257	0.280	0.320	0.366	0.423	0.456	0.460
	Navigate	Default	0.207	0.257	0.280	0.320	0.366	0.423	0.456	0.460
	Intervention	Default	0.184	0.219	0.236	0.263	0.294	0.334	0.355	0.358
Abdomen	UnSubtract	Default	0.207	0.257	0.280	0.320	0.366	0.423	0.456	0.460
	Navigate	Default	0.207	0.257	0.280	0.320	0.366	0.423	0.456	0.460
	Stent	Default	0.184	0.219	0.236	0.263	0.294	0.334	0.355	0.358
Peripheral	UnSubtract	Default	0.207	0.257	0.280	0.320	0.366	0.423	0.456	0.460
	Navigate	Default	0.207	0.257	0.280	0.320	0.366	0.423	0.456	0.460

16.20.6 Monoplane C20/F20 Systems with ClarityIQ Option

Radioscopy (Fluoroscopy) - C20/F20 with ClarityIQ

		Field of View	0	1	2	3	4	5	6	7
		Field Size (cm)	48	42	37	31	27	22	19	15
Procedure	Flavor	Patient Type	Reference Air Kerma (mGy/s)							
Cardio Clarity	Low	Default	0.077	0.096	0.105	0.119	0.137	0.160	0.182	0.216
	Medium	Default	0.115	0.142	0.156	0.179	0.205	0.241	0.276	0.333
	Normal	Default	0.277	0.340	0.370	0.420	0.478	0.555	0.630	0.748
Cardio Pedia-trics Clarity <40 kg	Low	Default	0.032	0.040	0.044	0.051	0.058	0.068	0.079	0.095
	Medium	Default	0.048	0.060	0.066	0.076	0.087	0.103	0.119	0.143
	Normal	Default	0.074	0.093	0.101	0.117	0.134	0.157	0.180	0.214
Cardio Pedia-trics Clarity >40 kg	Low	Default	0.032	0.040	0.044	0.051	0.058	0.068	0.079	0.095
	Medium	Default	0.048	0.060	0.066	0.076	0.087	0.103	0.119	0.143
	Normal	Default	0.074	0.093	0.101	0.117	0.134	0.157	0.180	0.214
EP Clarity	Low	Default	0.030	0.030	0.030	0.034	0.039	0.046	0.052	0.062
	Medium	Default	0.059	0.059	0.059	0.068	0.078	0.091	0.104	0.123
	Normal	Default	0.076	0.076	0.076	0.087	0.101	0.119	0.137	0.166
EP Biosense Clarity	Low	Default	0.030	0.030	0.030	0.034	0.039	0.046	0.052	0.062
	Medium	Default	0.059	0.059	0.059	0.068	0.078	0.091	0.104	0.123
	Normal	Default	0.076	0.076	0.076	0.087	0.101	0.119	0.137	0.166
Head Clarity	Low	Default	0.103	0.128	0.139	0.155	0.179	0.209	0.234	0.264
	Medium	Default	0.157	0.196	0.215	0.248	0.297	0.355	0.395	0.441
	Normal	Default	0.288	0.356	0.389	0.446	0.511	0.595	0.681	0.814
Spine Clarity	Low	Default	0.103	0.128	0.139	0.155	0.179	0.209	0.234	0.264
	Medium	Default	0.157	0.196	0.215	0.248	0.297	0.355	0.395	0.441
	Normal	Default	0.288	0.356	0.389	0.446	0.511	0.595	0.681	0.814
Thorax Clarity	Low	Default	0.103	0.128	0.139	0.155	0.179	0.209	0.234	0.264
	Medium	Default	0.157	0.196	0.215	0.248	0.297	0.355	0.395	0.441
	Normal	Default	0.288	0.356	0.389	0.446	0.511	0.595	0.681	0.814
Abdomen Clari-ty	Low	Default	0.103	0.128	0.139	0.155	0.179	0.209	0.234	0.264
	Medium	Default	0.157	0.196	0.215	0.248	0.297	0.355	0.395	0.441
	Normal	Default	0.288	0.356	0.389	0.446	0.511	0.595	0.681	0.814
Peripheral Clarity	Low	Default	0.077	0.096	0.105	0.119	0.137	0.160	0.182	0.216
	Medium	Default	0.115	0.142	0.156	0.179	0.205	0.241	0.276	0.333
	Normal	Default	0.277	0.340	0.370	0.420	0.478	0.555	0.630	0.748

Radiography (Exposure) - C20/F20 with ClarityIQ

		Field of View	0	1	2	3	4	5	6	7
		Field Size (cm)	48	42	37	31	27	22	19	15
Procedure	X-ray Protocol	Patient Type	Reference Air Kerma (mGy/image)							
Cardio Clarity	Left Coronary 15 fps Low	Default	0.019	0.023	0.026	0.030	0.034	0.040	0.047	0.056
	Rotational Scan Prop Ang0 4s	Default	0.105	0.130	0.142	0.163	0.187	0.217	0.247	0.293
		Infant	0.034	0.041	0.044	0.050	0.056	0.065	0.074	0.089
		Neonate	0.021	0.025	0.028	0.032	0.037	0.044	0.052	0.064
Cardio Pediatrics Clarity <40 kg	15 fps Contrast low	Default	0.010	0.012	0.013	0.015	0.018	0.021	0.024	0.028
	15 fps Contrast normal	Default	0.015	0.019	0.021	0.024	0.028	0.034	0.039	0.048
Cardio Pediatrics Clarity >40 kg	15 fps Contrast low	Default	0.019	0.023	0.026	0.030	0.034	0.040	0.047	0.056
		Neonate, Infant, Child	0.010	0.012	0.013	0.015	0.018	0.021	0.024	0.028
	15 fps Contrast normal	Default	0.041	0.051	0.056	0.064	0.074	0.087	0.099	0.118
		Neonate, Infant, Child	0.015	0.019	0.021	0.024	0.028	0.034	0.039	0.048
EP Clarity	15 fps	Default	0.019	0.023	0.026	0.030	0.034	0.040	0.047	0.056
	Prop 4s	Default	0.115	0.147	0.184	0.186	0.188	0.190	0.193	0.196
		Neonate, Infant	0.073	0.095	0.120	0.121	0.123	0.125	0.127	0.129
		Large Adult, Very Large Adult	0.115	0.147	0.184	0.186	0.188	0.190	0.193	0.196
EP Biosense Clarity	7.5 fps	Default	0.019	0.023	0.026	0.030	0.034	0.040	0.047	0.056
	3D EP Prop 4s	Default	0.115	0.147	0.184	0.186	0.188	0.190	0.193	0.196
		Neonate, Infant	0.073	0.095	0.120	0.121	0.123	0.125	0.127	0.129
		Large Adult, Very Large Adult	0.115	0.147	0.184	0.186	0.188	0.190	0.193	0.196
Head Clarity	Cerebral 2 fps low	Default	0.466	0.609	0.682	0.805	0.957	1.159	1.370	1.639
	Aortic Arch 3 fps	Default	0.666	0.870	0.975	1.151	1.365	1.656	1.959	2.339
Spine Clarity	4 fps	Default	0.534	0.698	0.781	0.923	1.098	1.336	1.585	1.899
	2 fps	Default	0.534	0.699	0.781	0.923	1.098	1.336	1.583	1.898
Thorax Clarity	Lungs 2 fps	Default	0.574	0.751	0.841	0.993	1.179	1.433	1.695	2.030
	Subclavian 3 fps	Default	0.801	1.047	1.172	1.384	1.641	1.988	2.345	2.793
Abdomen Clarity	3 fps low	Default	0.602	0.787	0.880	1.040	1.236	1.501	1.778	2.126
	Iliac / Pelvis 3 fps	Default	0.574	0.751	0.840	0.993	1.180	1.432	1.695	2.029
Peripheral Clarity	Upper Legs 3 fps	Default	0.521	0.681	0.761	0.866	0.976	1.121	1.250	1.397
	Lower Legs 1 fps	Default	0.953	1.245	1.393	1.642	1.944	2.227	2.458	2.740

Roadmap - C20/F20 with ClarityIQ

		Field of View	0	1	2	3	4	5	6	7
		Field Size (cm)	48	42	37	31	27	22	19	15
Procedure	Mode	Patient Type	Reference Air Kerma (mGy/image)							
Cardio Clarity	Navigate	Default	0.083	0.101	0.109	0.122	0.138	0.159	0.179	0.211
	UnSubtract	Default	0.083	0.101	0.109	0.122	0.138	0.159	0.179	0.211
Cardio Pediatrics Clarity <40 kg	Navigate	Default	0.083	0.101	0.109	0.122	0.138	0.159	0.179	0.211
	UnSubtract	Default	0.083	0.101	0.109	0.122	0.138	0.159	0.179	0.211
Cardio Pediatrics Clarity >40 kg	Navigate	Default	0.083	0.101	0.109	0.122	0.138	0.159	0.179	0.211
	UnSubtract	Default	0.083	0.101	0.109	0.122	0.138	0.159	0.179	0.211
EP Clarity	Navigate	Default	0.083	0.101	0.109	0.122	0.138	0.159	0.179	0.211
	UnSubtract	Default	0.083	0.101	0.109	0.122	0.138	0.159	0.179	0.211
EP Biosense Clarity	Navigate	Default	0.083	0.101	0.109	0.122	0.138	0.159	0.179	0.211
	UnSubtract	Default	0.083	0.101	0.109	0.122	0.138	0.159	0.179	0.211
Head Clarity	Navigate	Default	0.083	0.101	0.109	0.122	0.138	0.159	0.179	0.211
	Coil	Default	0.156	0.205	0.229	0.271	0.321	0.389	0.460	0.575
	Unsubtract	Default	0.083	0.101	0.109	0.122	0.138	0.159	0.179	0.211
Spine Clarity	Navigate	Default	0.083	0.101	0.109	0.122	0.138	0.159	0.179	0.211
	Coil	Default	0.156	0.205	0.229	0.271	0.321	0.389	0.460	0.575
	Unsubtract	Default	0.083	0.101	0.109	0.122	0.138	0.159	0.179	0.211
Thorax Clarity	UnSubtract	Default	0.083	0.101	0.109	0.122	0.138	0.159	0.179	0.211
	Navigate	Default	0.083	0.101	0.109	0.122	0.138	0.159	0.179	0.211
Abdomen Clarity	UnSubtract	Default	0.083	0.101	0.109	0.122	0.138	0.159	0.179	0.211
	Navigate	Default	0.083	0.101	0.109	0.122	0.138	0.159	0.179	0.211
Peripheral Clarity	UnSubtract	Default	0.083	0.101	0.109	0.122	0.138	0.159	0.179	0.211
	Navigate	Default	0.083	0.101	0.109	0.122	0.138	0.159	0.179	0.211

16.20.7 Biplane F12/12 Systems

Radioscopy (Fluoroscopy) - F12/12 Frontal Stand

		Field of View	0	1	2	3	4
		Field Size (cm)	30	27	22	19	15
Procedure	Flavor	Patient Type	Reference Air Kerma (mGy/s)				
Cardio	Low	Default	0.233	0.254	0.296	0.349	0.420
	Norm	Default	0.512	0.664	0.850	0.861	0.876
	High	Default	0.709	0.756	0.884	1.026	1.183
Pediatrics	Low	Default	0.183	0.199	0.233	0.276	0.328
	Norm	Default	0.433	0.470	0.539	0.611	0.698
	High	Default	0.684	0.731	0.792	0.864	0.951
EP	Low	Default	0.087	0.095	0.112	0.132	0.157
	Norm	Default	0.206	0.224	0.261	0.308	0.365
	High	Default	0.247	0.269	0.313	0.368	0.436

		Field of View	0	1	2	3	4
		Field Size (cm)	30	27	22	19	15
Procedure	Flavor	Patient Type	Reference Air Kerma (mGy/s)				
EP Biosense Carto	Low	Default	0.043	0.048	0.056	0.068	0.082
	Norm	Default	0.103	0.112	0.131	0.154	0.184
	High	Default	0.123	0.135	0.157	0.184	0.218
Head	Low	Default	0.184	0.252	0.291	0.299	0.310
	Norm	Default	0.472	0.503	0.565	0.641	0.734
	High	Default	0.753	0.815	0.937	1.094	1.278
Spine	Low	Default	0.184	0.252	0.291	0.299	0.310
	Norm	Default	0.472	0.503	0.565	0.641	0.734
	High	Default	0.753	0.815	0.937	1.094	1.278
Thorax	Low	Default	0.184	0.252	0.291	0.299	0.310
	Norm	Default	0.472	0.503	0.565	0.641	0.734
	High	Default	0.753	0.815	0.937	1.094	1.278
Abdomen	Low	Default	0.184	0.252	0.291	0.299	0.310
	Norm	Default	0.472	0.503	0.565	0.641	0.734
	High	Default	0.753	0.815	0.937	1.094	1.278
Peripheral	Low	Default	0.184	0.252	0.291	0.299	0.310
	Norm	Default	0.472	0.503	0.565	0.641	0.734
	High	Default	0.753	0.815	0.937	1.094	1.278

Radioscopy (Fluoroscopy) - F12/12 Lateral Stand

		Field of View	0	1	2	3	4
		Field Size (cm)	30	27	22	19	15
Procedure	Flavor	Patient Type	Reference Air Kerma (mGy/s)				
Cardio	Low	Default	0.263	0.287	0.334	0.395	0.479
	Norm	Default	0.576	0.749	0.957	0.970	0.987
	High	Default	0.802	0.850	0.997	1.155	1.349
Pediatrics	Low	Default	0.206	0.225	0.264	0.311	0.371
	Norm	Default	0.500	0.540	0.630	0.722	0.825
	High	Default	0.774	0.830	0.937	1.043	1.145
EP	Low	Default	0.099	0.108	0.128	0.153	0.182
	Norm	Default	0.232	0.252	0.294	0.348	0.415
	High	Default	0.279	0.303	0.353	0.416	0.493
EP Biosense Carto	Low	Default	0.049	0.054	0.064	0.077	0.093
	Norm	Default	0.116	0.126	0.147	0.174	0.208
	High	Default	0.139	0.152	0.176	0.208	0.247
Head	Low	Default	0.209	0.287	0.332	0.342	0.355
	Norm	Default	0.543	0.581	0.657	0.750	0.857
	High	Default	0.848	0.919	1.058	1.233	1.444
Spine	Low	Default	0.209	0.287	0.332	0.342	0.355
	Norm	Default	0.543	0.581	0.657	0.750	0.857
	High	Default	0.848	0.919	1.058	1.233	1.444

		Field of View	0	1	2	3	4
		Field Size (cm)	30	27	22	19	15
Procedure	Flavor	Patient Type	Reference Air Kerma (mGy/s)				
Thorax	Low	Default	0.209	0.287	0.332	0.342	0.355
	Norm	Default	0.543	0.581	0.657	0.750	0.857
	High	Default	0.848	0.919	1.058	1.233	1.444
Abdomen	Low	Default	0.209	0.287	0.332	0.342	0.355
	Norm	Default	0.543	0.581	0.657	0.750	0.857
	High	Default	0.848	0.919	1.058	1.233	1.444
Peripheral	Low	Default	0.209	0.287	0.332	0.342	0.355
	Norm	Default	0.543	0.581	0.657	0.750	0.857
	High	Default	0.848	0.919	1.058	1.233	1.444

Radiography (Exposure) - F12/12 Frontal Stand

		Field of View	0	1	2	3	4
		Field Size (cm)	30	27	22	19	15
Procedure	X-ray Protocol	Patient Type	Reference Air Kerma (mGy/image)				
Cardio	Left Coronary 15 fps Low	Default	0.104	0.113	0.130	0.152	0.178
		Infant	0.074	0.079	0.088	0.099	0.114
		Large Adult, Very Large Adult	0.104	0.113	0.130	0.152	0.178
		Neonate	0.040	0.044	0.051	0.062	0.074
	Rotational Scan Prop Ang0 4s	Default	0.195	0.212	0.244	0.282	0.329
		Infant	0.063	0.068	0.078	0.090	0.106
		Neonate	0.040	0.044	0.051	0.062	0.074
Pediatrics	15 fps Contrast Normal	Default	0.195	0.212	0.244	0.282	0.329
		Child, Small Adult	0.115	0.125	0.145	0.169	0.198
		Infant	0.074	0.079	0.088	0.099	0.114
		Neonate	0.043	0.047	0.054	0.064	0.076
	Prop Free Position	Default	0.201	0.218	0.252	0.293	0.342
		Neonate, Infant	0.043	0.047	0.054	0.064	0.076
EP	15 fps	Default	0.115	0.125	0.145	0.169	0.198
	Prop 4s	Default	0.228	0.231	0.235	0.240	0.246
		Neonate, nfant	0.148	0.150	0.152	0.156	0.161
		Large Adult, Very Large Adult	0.228	0.231	0.235	0.240	0.246
EP Biosence Carto	7.5 fps low	Default	0.017	0.018	0.021	0.026	0.031
	3D EP Prop 4s	Default	0.228	0.231	0.235	0.240	0.246
		Neonate, Infant	0.148	0.150	0.152	0.156	0.161
		Large Adult, Very Large Adult	0.228	0.231	0.235	0.240	0.246
Head	Cerebral 2 fps normal	Default	4.895	5.436	6.540	7.701	8.502
		Child	3.153	3.378	3.820	4.379	5.072
		Neonate, Infant	3.153	3.378	3.820	4.379	5.072
	Aortic Arch 3 fps	Default	7.304	8.113	9.713	11.788	12.894
Spine	4 fps	Default	2.050	2.279	2.739	3.335	4.088
	2 fps	Default	2.566	2.851	3.428	4.172	5.113

		Field of View	0	1	2	3	4
		Field Size (cm)	30	27	22	19	15
Procedure	X-ray Protocol	Patient Type	Reference Air Kerma (mGy/image)				
Thorax	Lungs 2 fps	Default	2.446	2.719	3.269	3.950	4.361
	Subclavian 3 fps	Default	9.046	10.673	10.810	10.972	11.183
Abdomen	Abdomen	Default	3.824	4.242	5.101	6.198	7.578
	3 fps	Large Adult, Very Large Adult	3.317	3.681	4.434	5.398	6.620
	Iliac / Pelvis 3 fps	Default	7.297	8.108	9.730	11.842	14.472
Peripheral	Upper Legs 3 fps	Default	6.608	7.334	8.209	8.933	9.781
	Lower Legs 1 fps	Default	8.229	8.644	9.320	10.125	11.043

Radiography (Exposure) - F12/12 Lateral Stand

		Field of View	0	1	2	3	4
		Field Size (cm)	30	27	22	19	15
Procedure	X-ray Protocol	Patient Type	Reference Air Kerma (mGy/image)				
Cardio	Left Coronary 15 fps Low	Default	0.117	0.128	0.147	0.172	0.201
		Infant	0.081	0.087	0.097	0.110	0.126
		Large Adult, Very Large Adult	0.117	0.128	0.147	0.172	0.201
		Neonate	0.048	0.052	0.061	0.072	0.086
	Rotational Scan Prop Ang0 4s	Default	-	-	-	-	-
		Infant	-	-	-	-	-
		Neonate	-	-	-	-	-
Pediatrics	15 fps Contrast Normal	Default	0.222	0.240	0.276	0.320	0.372
		Child, Small Adult	0.131	0.142	0.164	0.191	0.224
		Infant	0.081	0.087	0.097	0.110	0.126
		Neonate	0.048	0.052	0.061	0.072	0.086
	Prop Free Position	Default	-	-	-	-	-
		Neonate, Infant	-	-	-	-	-
EP	15 fps	Default	0.131	0.142	0.164	0.191	0.224
	Prop 4s	Default	-	-	-	-	-
		Neonate, nfant	-	-	-	-	-
		Large Adult, Very Large Adult	-	-	-	-	-
EP Biosence Carto	7.5 fps low	Default	0.019	0.021	0.024	0.029	0.035
	3D EP Prop 4s	Default	-	-	-	-	-
		Neonate, Infant	-	-	-	-	-
		Large Adult, Very Large Adult	-	-	-	-	-
Head	Cerebral 2 fps normal	Default	5.654	6.278	7.554	8.391	9.281
		Child	3.491	3.739	4.233	4.860	5.655
		Neonate, Infant	3.491	3.739	4.233	4.860	5.655
	Aortic Arch 3 fps	Default	8.478	9.399	11.276	13.029	13.856
Spine	4 fps	Default	1.806	2.011	2.428	2.967	3.648
	2 fps	Default	2.258	2.517	3.035	3.711	4.557
Thorax	Lungs 2 fps	Default	2.827	3.142	3.779	4.305	4.760
	Subclavian 3 fps	Default	10.511	12.386	12.544	12.732	12.977

		Field of View	0	1	2	3	4
		Field Size (cm)	30	27	22	19	15
Procedure	X-ray Protocol	Patient Type	Reference Air Kerma (mGy/image)				
Abdomen	Abdomen	Default	4.429	4.923	5.908	7.179	8.778
	3 fps	Large Adult, Very Large Adult	3.842	4.264	5.131	6.253	7.653
	Iliac / Pelvis 3 fps	Default	8.449	9.387	11.287	13.710	16.755
Peripheral	Upper Legs 3 fps	Default	6.048	6.336	6.894	7.585	8.413
	Lower Legs 1 fps	Default	6.790	7.107	7.707	8.437	9.318

Roadmap - F12/12 Frontal Stand

		Field of View	0	1	2	3	4
		Field Size (cm)	30	27	22	19	15
Procedure	Mode	Patient Type	Reference Air Kerma (mGy/image)				
Cardio	Navigate	Default	0.383	0.486	0.490	0.496	0.503
	UnSubtract	Default	0.383	0.486	0.490	0.496	0.503
Pediatrics	Navigate	Default	0.383	0.486	0.490	0.496	0.503
	UnSubtract	Default	0.383	0.486	0.490	0.496	0.503
EP	Navigate	Default	0.383	0.486	0.490	0.496	0.503
EP Biosense Carto	Navigate	Default	0.383	0.486	0.490	0.496	0.503
Head	Navigate	Default	0.383	0.486	0.490	0.496	0.503
	Carotid	Default	0.381	0.461	0.465	0.470	0.476
	Coil	Default	1.818	2.020	2.428	2.951	3.611
Spine	UnSubtract	Default	0.383	0.486	0.490	0.496	0.503
	Navigate	Default	0.383	0.486	0.490	0.496	0.503
	Stent	Default	0.381	0.461	0.465	0.470	0.476
Thorax	UnSubtract	Default	0.383	0.486	0.490	0.496	0.503
	Navigate	Default	0.383	0.486	0.490	0.496	0.503
	Intervention	Default	0.381	0.461	0.465	0.470	0.476
Abdomen	UnSubtract	Default	0.383	0.486	0.490	0.496	0.503
	Navigate	Default	0.383	0.486	0.490	0.496	0.503
	Stent	Default	0.381	0.461	0.465	0.470	0.476
Peripheral	UnSubtract	Default	0.383	0.486	0.490	0.496	0.503
	Navigate	Default	0.383	0.486	0.490	0.496	0.503

Roadmap - F12/12 Lateral Stand

		Field of View	0	1	2	3	4
		Field Size (cm)	30	27	22	19	15
Procedure	Mode	Patient Type	Reference Air Kerma (mGy/image)				
Cardio	Navigate	Default	0.434	0.549	0.554	0.560	0.569
	UnSubtract	Default	0.434	0.549	0.554	0.560	0.569
Pediatrics	Navigate	Default	0.434	0.549	0.554	0.560	0.569
	UnSubtract	Default	0.434	0.549	0.554	0.560	0.569
EP	Navigate	Default	0.434	0.549	0.554	0.560	0.569

		Field of View	0	1	2	3	4
		Field Size (cm)	30	27	22	19	15
Procedure	Mode	Patient Type	Reference Air Kerma (mGy/image)				
EP Biosense Carto	Navigate	Default	0.434	0.549	0.554	0.560	0.569
Head	Navigate	Default	0.434	0.549	0.554	0.560	0.569
	Carotid	Default	0.423	0.514	0.517	0.524	0.531
	Coil	Default	2.110	2.344	2.812	3.418	4.181
Spine	UnSubtract	Default	0.434	0.549	0.554	0.560	0.569
	Navigate	Default	0.434	0.549	0.554	0.560	0.569
	Stent	Default	0.423	0.514	0.517	0.524	0.531
Thorax	UnSubtract	Default	0.434	0.549	0.554	0.560	0.569
	Navigate	Default	0.434	0.549	0.554	0.560	0.569
	Intervention	Default	0.423	0.514	0.517	0.524	0.531
Abdomen	UnSubtract	Default	0.434	0.549	0.554	0.560	0.569
	Navigate	Default	0.434	0.549	0.554	0.560	0.569
	Stent	Default	0.423	0.514	0.517	0.524	0.531
Peripheral	UnSubtract	Default	0.434	0.549	0.554	0.560	0.569
	Navigate	Default	0.434	0.549	0.554	0.560	0.569

16.20.8 Biplane F12/12 Systems with ClarityIQ Option

Radioscopy (Fluoroscopy) - F12/12 with ClarityIQ Frontal Stand

		Field of View	0	1	2	3	4
		Field Size (cm)	30	27	22	19	15
Procedure	Flavor	Patient Type	Reference Air Kerma (mGy/s)				
Cardio Clarity	Low	Default	0.147	0.159	0.184	0.214	0.250
	Medium	Default	0.217	0.236	0.274	0.322	0.380
	Normal	Default	0.512	0.553	0.635	0.737	0.858
Cardio Pediatrics Clarity <40 kg	Low	Default	0.061	0.066	0.078	0.091	0.109
	Medium	Default	0.092	0.100	0.116	0.135	0.158
	Normal	Default	0.144	0.157	0.181	0.211	0.248
Cardio Pediatrics Clarity >40 kg	Low	Default	0.061	0.066	0.078	0.091	0.109
	Medium	Default	0.092	0.100	0.116	0.135	0.158
	Normal	Default	0.144	0.157	0.181	0.211	0.248
EP Clarity	Low	Default	0.044	0.047	0.055	0.064	0.073
	Medium	Default	0.086	0.094	0.109	0.127	0.147
	Normal	Default	0.106	0.116	0.135	0.159	0.189
EP Biosense Clarity	Low	Default	0.044	0.047	0.055	0.064	0.073
	Medium	Default	0.086	0.094	0.109	0.127	0.147
	Normal	Default	0.106	0.116	0.135	0.159	0.189
Head Clarity	Low	Default	0.189	0.202	0.229	0.263	0.307
	Medium	Default	0.306	0.334	0.389	0.447	0.514
	Normal	Default	0.557	0.604	0.697	0.813	0.951

		Field of View	0	1	2	3	4
		Field Size (cm)	30	27	22	19	15
Procedure	Flavor	Patient Type	Reference Air Kerma (mGy/s)				
Spine Clarity	Low	Default	0.189	0.202	0.229	0.263	0.307
	Medium	Default	0.306	0.334	0.389	0.447	0.514
	Normal	Default	0.557	0.604	0.697	0.813	0.951
Thorax Clarity	Low	Default	0.189	0.202	0.229	0.263	0.307
	Medium	Default	0.306	0.334	0.389	0.447	0.514
	Normal	Default	0.557	0.604	0.697	0.813	0.951
Abdomen Clarity	Low	Default	0.189	0.202	0.229	0.263	0.307
	Medium	Default	0.306	0.334	0.389	0.447	0.514
	Normal	Default	0.557	0.604	0.697	0.813	0.951
Peripheral Clarity	Low	Default	0.189	0.202	0.229	0.263	0.307
	Medium	Default	0.306	0.334	0.389	0.447	0.514
	Normal	Default	0.557	0.604	0.697	0.813	0.951

Radioscopy (Fluoroscopy) - F12/12 with ClarityIQ Lateral Stand

		Field of View	0	1	2	3	4
		Field Size (cm)	30	27	22	19	15
Procedure	Flavor	Patient Type	Reference Air Kerma (mGy/s)				
Cardio Clarity	Low	Default	0.165	0.180	0.208	0.243	0.286
	Medium	Default	0.245	0.267	0.309	0.363	0.429
	Normal	Default	0.575	0.623	0.715	0.829	0.968
Cardio Pediatrics Clarity <40 kg	Low	Default	0.069	0.075	0.087	0.103	0.123
	Medium	Default	0.104	0.114	0.132	0.155	0.181
	Normal	Default	0.163	0.177	0.205	0.241	0.285
Cardio Pediatrics Clarity >40 kg	Low	Default	0.069	0.075	0.087	0.103	0.123
	Medium	Default	0.104	0.114	0.132	0.155	0.181
	Normal	Default	0.163	0.177	0.205	0.241	0.285
EP Clarity	Low	Default	0.050	0.054	0.063	0.073	0.086
	Medium	Default	0.101	0.110	0.127	0.149	0.174
	Normal	Default	0.120	0.131	0.153	0.180	0.214
EP Biosense Clarity	Low	Default	0.050	0.054	0.063	0.073	0.086
	Medium	Default	0.101	0.110	0.127	0.149	0.174
	Normal	Default	0.120	0.131	0.153	0.180	0.214
Head Clarity	Low	Default	0.213	0.230	0.264	0.308	0.360
	Medium	Default	0.346	0.377	0.436	0.503	0.585
	Normal	Default	0.628	0.682	0.787	0.918	1.076
Spine Clarity	Low	Default	0.213	0.230	0.264	0.308	0.360
	Medium	Default	0.346	0.377	0.436	0.503	0.585
	Normal	Default	0.628	0.682	0.787	0.918	1.076
Thorax Clarity	Low	Default	0.213	0.230	0.264	0.308	0.360
	Medium	Default	0.346	0.377	0.436	0.503	0.585
	Normal	Default	0.628	0.682	0.787	0.918	1.076

		Field of View	0	1	2	3	4
		Field Size (cm)	30	27	22	19	15
Procedure	Flavor	Patient Type	Reference Air Kerma (mGy/s)				
Abdomen Clarity	Low	Default	0.213	0.230	0.264	0.308	0.360
	Medium	Default	0.346	0.377	0.436	0.503	0.585
	Normal	Default	0.628	0.682	0.787	0.918	1.076
Peripheral Clarity	Low	Default	0.213	0.230	0.264	0.308	0.360
	Medium	Default	0.346	0.377	0.436	0.503	0.585
	Normal	Default	0.628	0.682	0.787	0.918	1.076

Radiography (Exposure) - F12/12 with ClarityIQ Frontal Stand

		Field of View	0	1	2	3	4
		Field Size (cm)	30	27	22	19	15
Procedure	X-ray Protocol	Patient Type	Reference Air Kerma (mGy/image)				
Cardio Clarity	Left Coronary 15 fps Low	Default	0.037	0.040	0.047	0.055	0.065
	Rotational Scan Prop Ang0 4s	Default	0.195	0.212	0.244	0.282	0.329
		Infant	0.063	0.068	0.078	0.090	0.106
		Neonate	0.040	0.044	0.051	0.062	0.074
Cardio Pediatrics Clarity <40 kg	15 fps Contrast low	Default	0.019	0.020	0.023	0.028	0.032
	15 fps Contrast normal	Default	0.030	0.033	0.039	0.046	0.055
Cardio Pediatrics Clarity >40 kg	15 fps Contrast low	Default	0.037	0.040	0.047	0.055	0.065
		Neonate, Infant, Child	0.019	0.020	0.023	0.028	0.032
	15 fps Contrast normal	Default	0.077	0.084	0.097	0.113	0.133
		Neonate, Infant, Child	0.030	0.033	0.039	0.046	0.055
EP Clarity	15 fps	Default	0.037	0.040	0.047	0.055	0.065
	Prop 4s	Default	0.228	0.231	0.235	0.240	0.246
		Neonate, Infant	0.148	0.150	0.152	0.156	0.161
		Large Adult, Very Large Adult	0.228	0.231	0.235	0.240	0.246
EP Biosense Clarity	7.5 fps	Default	0.037	0.040	0.047	0.055	0.065
	3D EP Prop 4s	Default	0.228	0.231	0.235	0.240	0.246
		Neonate, Infant	0.148	0.150	0.152	0.156	0.161
		Large Adult, Very Large Adult	0.228	0.231	0.235	0.240	0.246
Head Clarity	Cerebral 2 fps low	Default	0.990	1.099	1.318	1.602	1.953
	Aortic Arch 3 fps	Default	1.423	1.580	1.895	2.305	2.810
Spine Clarity	4 fps	Default	1.133	1.260	1.519	1.852	2.273
	2 fps	Default	1.134	1.260	1.518	1.853	2.273
Thorax Clarity	Lungs 2 fps	Default	1.221	1.357	1.630	1.986	2.432
	Subclavian 3 fps	Default	1.722	1.912	2.289	2.774	3.378
Abdomen Clarity	3 fps low	Default	0.797	0.884	1.060	1.285	1.569
	Iliac / Pelvis 3 fps	Default	3.890	4.322	5.202	6.340	7.138
Peripheral Clarity	Upper Legs 3 fps	Default	1.128	1.254	1.502	1.688	1.903
	Lower Legs 1 fps	Default	2.064	2.285	2.732	3.302	4.006

Radiography (Exposure) - F12/12 with ClarityIQ Lateral Stand

		Field of View	0	1	2	3	4
		Field Size (cm)	30	27	22	19	15
Procedure	X-ray Protocol	Patient Type	Reference Air Kerma (mGy/image)				
Cardio Clarity	Left Coronary 15 fps Low	Default	0.042	0.045	0.053	0.062	0.073
	Rotational Scan Prop Ang0 4s	Default	-	-	-	-	-
		Infant	-	-	-	-	-
		Neonate	-	-	-	-	-
Cardio Pediatrics Clarity <40 kg	15 fps Contrast low	Default	0.021	0.023	0.026	0.031	0.036
	15 fps Contrast normal	Default	0.034	0.037	0.044	0.052	0.061
Cardio Pediatrics Clarity >40 kg	15 fps Contrast low	Default	0.042	0.045	0.053	0.062	0.073
		Neonate, Infant, Child	0.021	0.023	0.026	0.031	0.036
	15 fps Contrast normal	Default	0.087	0.095	0.110	0.128	0.150
		Neonate, Infant, Child	0.034	0.037	0.044	0.052	0.061
EP Clarity	15 fps	Default	0.042	0.045	0.053	0.062	0.073
	Prop 4s	Default	-	-	-	-	-
		Neonate, Infant	-	-	-	-	-
		Large Adult, Very Large Adult	-	-	-	-	-
EP Biosense Clarity	7.5 fps	Default	0.042	0.045	0.053	0.062	0.073
	3D EP Prop 4s	Default	-	-	-	-	-
		Neonate, Infant	-	-	-	-	-
		Large Adult, Very Large Adult	-	-	-	-	-
Head Clarity	Cerebral 2 fps low	Default	1.143	1.269	1.524	1.849	2.258
	Aortic Arch 3 fps	Default	1.646	1.827	2.192	2.660	3.250
Spine Clarity	4 fps	Default	1.250	1.387	1.673	2.039	2.502
	2 fps	Default	1.248	1.388	1.672	2.040	2.500
Thorax Clarity	Lungs 2 fps	Default	1.410	1.567	1.882	2.292	2.804
	Subclavian 3 fps	Default	1.993	2.210	2.647	3.203	3.901
Abdomen Clarity	3 fps low	Default	0.921	1.022	1.225	1.486	1.813
	Iliac / Pelvis 3 fps	Default	3.984	4.435	5.339	6.520	7.354
Peripheral Clarity	Upper Legs 3 fps	Default	1.304	1.445	1.662	1.862	2.102
	Lower Legs 1 fps	Default	2.391	2.645	3.161	3.816	4.503

Roadmap - F12/12 with ClarityIQ Frontal Stand

		Field of View	0	1	2	3	4
		Field Size (cm)	30	27	22	19	15
Procedure	Mode	Patient Type	Reference Air Kerma (mGy/image)				
Cardio Clarity	Navigate	Default	0.175	0.188	0.213	0.243	0.279
	UnSubtract	Default	0.175	0.188	0.213	0.243	0.279
Cardio Pediatrics Clarity <40 kg	Navigate	Default	0.175	0.188	0.213	0.243	0.279
	UnSubtract	Default	0.175	0.188	0.213	0.243	0.279

		Field of View	0	1	2	3	4
		Field Size (cm)	30	27	22	19	15
Procedure	Mode	Patient Type	Reference Air Kerma (mGy/image)				
Cardio Pediatrics Clarity >40 kg	Navigate	Default	0.175	0.188	0.213	0.243	0.279
	UnSubtract	Default	0.175	0.188	0.213	0.243	0.279
EP Clarity	Navigate	Default	0.175	0.188	0.213	0.243	0.279
	UnSubtract	Default	0.175	0.188	0.213	0.243	0.279
EP Biosense Clarity	Navigate	Default	0.175	0.188	0.213	0.243	0.279
	UnSubtract	Default	0.175	0.188	0.213	0.243	0.279
Head Clarity	Navigate	Default	0.175	0.188	0.213	0.243	0.279
	Coil	Default	0.335	0.372	0.447	0.542	0.661
	Unsubtract	Default	0.175	0.188	0.213	0.243	0.279
Spine Clarity	Navigate	Default	0.175	0.188	0.213	0.243	0.279
	Coil	Default	0.236	0.262	0.314	0.382	0.467
	Unsubtract	Default	0.175	0.188	0.213	0.243	0.279
Thorax Clarity	UnSubtract	Default	0.175	0.188	0.213	0.243	0.279
	Navigate	Default	0.175	0.188	0.213	0.243	0.279
Abdomen Clarity	UnSubtract	Default	0.175	0.188	0.213	0.243	0.279
	Navigate	Default	0.175	0.188	0.213	0.243	0.279
Peripheral Clarity	UnSubtract	Default	0.175	0.188	0.213	0.243	0.279
	Navigate	Default	0.175	0.188	0.213	0.243	0.279

Roadmap - F12/12 with ClarityIQ Lateral Stand

		Field of View	0	1	2	3	4
		Field Size (cm)	30	27	22	19	15
Procedure	Mode	Patient Type	Reference Air Kerma (mGy/image)				
Cardio Clarity	Navigate	Default	0.196	0.210	0.238	0.272	0.313
	UnSubtract	Default	0.196	0.210	0.238	0.272	0.313
Cardio Pediatrics Clarity <40 kg	Navigate	Default	0.196	0.210	0.238	0.272	0.313
	UnSubtract	Default	0.196	0.210	0.238	0.272	0.313
Cardio Pediatrics Clarity >40 kg	Navigate	Default	0.196	0.210	0.238	0.272	0.313
	UnSubtract	Default	0.196	0.210	0.238	0.272	0.313
EP Clarity	Navigate	Default	0.196	0.210	0.238	0.272	0.313
	UnSubtract	Default	0.196	0.210	0.238	0.272	0.313
EP Biosense Clarity	Navigate	Default	0.196	0.210	0.238	0.272	0.313
	UnSubtract	Default	0.196	0.210	0.238	0.272	0.313
Head Clarity	Navigate	Default	0.196	0.210	0.238	0.272	0.313
	Coil	Default	0.387	0.429	0.516	0.626	0.764
	Unsubtract	Default	0.196	0.210	0.238	0.272	0.313
Spine Clarity	Navigate	Default	0.196	0.210	0.238	0.272	0.313
	Coil	Default	0.387	0.429	0.516	0.626	0.764
	Unsubtract	Default	0.196	0.210	0.238	0.272	0.313
Thorax Clarity	UnSubtract	Default	0.196	0.210	0.238	0.272	0.313
	Navigate	Default	0.196	0.210	0.238	0.272	0.313

		Field of View	0	1	2	3	4
		Field Size (cm)	30	27	22	19	15
Procedure	Mode	Patient Type	Reference Air Kerma (mGy/image)				
Abdomen Clarity	UnSubtract	Default	0.196	0.210	0.238	0.272	0.313
	Navigate	Default	0.196	0.210	0.238	0.272	0.313
Peripheral Clarity	UnSubtract	Default	0.196	0.210	0.238	0.272	0.313
	Navigate	Default	0.196	0.210	0.238	0.272	0.313

16.20.9 Biplane F20/12 Systems

Radioscopy (Fluoroscopy) - F20/12 Frontal Stand

		Field of View	0	1	2	3	4	5	6	7
		Field Size (cm)	48	42	37	31	27	22	19	15
Procedure	Flavor	Patient Type	Reference Air Kerma (mGy/s)							
Cardio	Low	Default	0.125	0.158	0.174	0.201	0.232	0.274	0.314	0.379
	Norm	Default	0.338	0.412	0.447	0.503	0.567	0.651	0.731	0.847
	High	Default	0.423	0.521	0.568	0.643	0.730	0.842	0.951	1.112
Pediatrics	Low	Default	0.115	0.144	0.158	0.181	0.208	0.243	0.278	0.315
	Norm	Default	0.253	0.313	0.343	0.390	0.443	0.501	0.557	0.645
	High	Default	0.428	0.514	0.553	0.615	0.663	0.724	0.782	0.871
EP	Low	Default	0.059	0.075	0.082	0.093	0.104	0.118	0.136	0.149
	Norm	Default	0.130	0.162	0.178	0.203	0.243	0.273	0.331	0.375
	High	Default	0.151	0.191	0.211	0.244	0.282	0.332	0.381	0.460
EP Biosense Carto	Low	Default	0.030	0.037	0.041	0.046	0.053	0.060	0.070	0.077
	Norm	Default	0.065	0.081	0.089	0.102	0.121	0.136	0.166	0.187
	High	Default	0.076	0.096	0.105	0.122	0.141	0.166	0.191	0.230
Head	Low	Default	0.140	0.175	0.192	0.221	0.254	0.288	0.321	0.354
	Norm	Default	0.285	0.353	0.386	0.439	0.518	0.602	0.667	0.737
	High	Default	0.462	0.567	0.618	0.700	0.796	0.921	1.040	1.203
Spine	Low	Default	0.140	0.175	0.192	0.221	0.254	0.288	0.321	0.354
	Norm	Default	0.285	0.353	0.386	0.439	0.518	0.602	0.667	0.737
	High	Default	0.462	0.567	0.618	0.700	0.796	0.921	1.040	1.203
Thorax	Low	Default	0.140	0.175	0.192	0.221	0.254	0.288	0.321	0.354
	Norm	Default	0.285	0.353	0.386	0.439	0.518	0.602	0.667	0.737
	High	Default	0.462	0.567	0.618	0.700	0.796	0.921	1.040	1.203
Abdomen	Low	Default	0.140	0.175	0.192	0.221	0.254	0.288	0.321	0.354
	Norm	Default	0.285	0.353	0.386	0.439	0.518	0.602	0.667	0.737
	High	Default	0.462	0.567	0.618	0.700	0.796	0.921	1.040	1.203
Peripheral	Low	Default	0.140	0.175	0.192	0.221	0.254	0.288	0.321	0.354
	Norm	Default	0.285	0.353	0.386	0.439	0.518	0.602	0.667	0.737
	High	Default	0.462	0.567	0.618	0.700	0.796	0.921	1.040	1.203

Radioscopy (Fluoroscopy) - F20/12 Lateral Stand

		Field of View	0	1	2	3	4
		Field Size (cm)	30	27	22	19	15
Procedure	Flavor	Patient Type	Reference Air Kerma (mGy/s)				
Cardio	Low	Default	0.337	0.366	0.428	0.504	0.594
	Norm	Default	0.672	0.878	1.118	1.118	1.118
	High	Default	0.936	0.983	1.152	1.323	1.525
Pediatrics	Low	Default	0.264	0.287	0.331	0.385	0.449
	Norm	Default	0.608	0.642	0.732	0.827	0.937
	High	Default	0.882	0.933	1.013	1.108	1.213
EP	Low	Default	0.132	0.144	0.166	0.193	0.224
	Norm	Default	0.302	0.328	0.379	0.441	0.516
	High	Default	0.353	0.382	0.440	0.512	0.602
EP Biosense Carto	Low	Default	0.066	0.072	0.084	0.099	0.116
	Norm	Default	0.151	0.164	0.189	0.221	0.258
	High	Default	0.176	0.191	0.220	0.256	0.301
Head	Low	Default	0.293	0.402	0.456	0.456	0.456
	Norm	Default	0.633	0.678	0.761	0.861	0.976
	High	Default	1.000	1.080	1.236	1.424	1.643
Spine	Low	Default	0.293	0.402	0.456	0.456	0.456
	Norm	Default	0.633	0.678	0.761	0.861	0.976
	High	Default	1.000	1.080	1.236	1.424	1.643
Thorax	Low	Default	0.293	0.402	0.456	0.456	0.456
	Norm	Default	0.633	0.678	0.761	0.861	0.976
	High	Default	1.000	1.080	1.236	1.424	1.643
Abdomen	Low	Default	0.293	0.402	0.456	0.456	0.456
	Norm	Default	0.633	0.678	0.761	0.861	0.976
	High	Default	1.000	1.080	1.236	1.424	1.643
Peripheral	Low	Default	0.293	0.402	0.456	0.456	0.456
	Norm	Default	0.633	0.678	0.761	0.861	0.976
	High	Default	1.000	1.080	1.236	1.424	1.643

Radiography (Exposure) - F20/12 Frontal Stand

		Field of View	0	1	2	3	4	5	6	7
		Field Size (cm)	48	42	37	31	27	22	19	15
Procedure	X-ray Protocol	Patient Type	Reference Air Kerma (mGy/image)							
Cardio	Left Coronary	Default	0.061	0.076	0.083	0.095	0.108	0.125	0.142	0.168
	15 fps Low	Infant	0.046	0.054	0.058	0.064	0.071	0.081	0.090	0.104
		Large Adult, Very Large Adult	0.060	0.075	0.082	0.093	0.107	0.124	0.141	0.166
		Neonate	0.025	0.032	0.035	0.040	0.046	0.054	0.063	0.076
	Rotational Scan	Default	0.116	0.143	0.157	0.179	0.204	0.236	0.267	0.314
	Prop Ang0 4s	Infant	0.039	0.048	0.052	0.058	0.066	0.076	0.086	0.101
		Neonate	0.025	0.032	0.035	0.040	0.046	0.054	0.063	0.076
Pediatrics	15 fps Contrast Normal	Default	0.118	0.146	0.160	0.181	0.206	0.238	0.269	0.317
		Child, Small Adult	0.069	0.086	0.094	0.107	0.123	0.142	0.161	0.188
		Infant	0.039	0.048	0.052	0.058	0.066	0.076	0.086	0.101
		Neonate	0.025	0.032	0.035	0.040	0.046	0.054	0.063	0.076
	Prop Free Position	Default	0.114	0.142	0.155	0.177	0.202	0.234	0.265	0.314
		Neonate, Infant	0.027	0.033	0.036	0.041	0.047	0.054	0.062	0.074
EP	15 fps	Default	0.069	0.086	0.094	0.107	0.123	0.142	0.161	0.188
	Prop 4s	Default	0.141	0.180	0.225	0.225	0.225	0.225	0.225	0.225
		Neonate, Infant	0.094	0.121	0.153	0.153	0.153	0.153	0.153	0.153
		Large Adult, Very Large Adult	0.141	0.180	0.225	0.225	0.225	0.225	0.225	0.225
EP Biosence Carto	7.5 fps low	Default	0.011	0.014	0.015	0.017	0.019	0.022	0.025	0.028
	3D EP Prop 4s	Default	0.141	0.180	0.225	0.225	0.225	0.225	0.225	0.225
		Neonate, Infant	0.094	0.121	0.153	0.153	0.153	0.153	0.153	0.153
		Large Adult, Very Large Adult	0.141	0.180	0.225	0.225	0.225	0.225	0.225	0.225
Head	Cerebral 2 fps normal	Default	2.856	3.713	4.139	4.848	5.711	6.852	7.867	8.549
		Child	1.839	2.207	2.384	2.677	3.022	3.482	3.945	4.534
		Neonate, Infant	1.839	2.207	2.384	2.677	3.022	3.482	3.945	4.534
	Aortic Arch 3 fps	Default	4.232	5.502	6.139	7.198	8.155	8.155	8.155	8.155
Spine	4 fps	Default	1.197	1.555	1.734	2.034	2.390	2.870	3.350	4.127
	2 fps	Default	1.495	1.944	2.168	2.540	2.993	3.591	4.184	5.163
Thorax	Lungs 2 fps	Default	1.427	1.857	2.068	2.426	2.677	2.938	3.189	3.492
	Subclavian 3 fps	Default	5.136	6.669	7.447	8.718	10.268	11.183	11.737	12.575

		Field of View	0	1	2	3	4	5	6	7
		Field Size (cm)	48	42	37	31	27	22	19	15
Procedure	X-ray Protocol	Patient Type	Reference Air Kerma (mGy/image)							
Abdomen	Abdomen	Default	2.619	3.406	3.801	4.455	5.243	6.296	7.334	7.334
	3 fps	Large Adult, Very Large Adult	2.306	2.995	3.342	3.922	4.613	5.530	6.457	7.953
	Iliac / Pelvis 3 fps	Default	4.262	5.538	6.173	7.243	8.517	10.218	11.918	14.041
Peripheral	Upper Legs 3 fps	Default	3.690	4.793	5.292	5.691	6.142	6.705	7.241	7.869
	Lower Legs 1 fps	Default	4.509	5.620	5.922	6.361	6.850	7.454	8.029	8.708

Radiography (Exposure) - F20/12 Lateral Stand

		Field of View	0	1	2	3	4
		Field Size (cm)	30	27	22	19	15
Procedure	X-ray Protocol	Patient Type	Reference Air Kerma (mGy/image)				
Cardio	Left Coronary	Default	0.137	0.148	0.170	0.197	0.227
	15 fps Low	Infant	0.095	0.101	0.113	0.128	0.145
		Large Adult, Very Large Adult	0.138	0.148	0.170	0.196	0.227
		Neonate	0.063	0.068	0.078	0.091	0.107
	Rotational Scan	Default	-	-	-	-	-
	Prop Ang0 4s	Infant	-	-	-	-	-
		Neonate	-	-	-	-	-
Pediatrics	15 fps Contrast Normal	Default	0.252	0.271	0.310	0.356	0.408
		Child, Small Adult	0.153	0.166	0.189	0.219	0.253
		Infant	0.095	0.101	0.113	0.128	0.145
		Neonate	0.063	0.068	0.078	0.091	0.107
	Prop Free Position	Default	-	-	-	-	-
		Neonate, Infant	-	-	-	-	-
EP	15 fps	Default	0.153	0.166	0.189	0.219	0.253
	Prop 4s	Default	-	-	-	-	-
		Neonate, Infant	-	-	-	-	-
		Large Adult, Very Large Adult	-	-	-	-	-
EP Biosence Carto	7.5 fps low	Default	0.024	0.027	0.031	0.036	0.042
	3D EP Prop 4s	Default	-	-	-	-	-
		Neonate, Infant	-	-	-	-	-
		Large Adult, Very Large Adult	-	-	-	-	-
Head	Cerebral 2 fps normal	Default	7.227	7.589	8.276	9.092	10.049
		Child	4.242	4.550	5.153	5.904	6.819
		Neonate, Infant	4.242	4.550	5.153	5.904	6.819
	Aortic Arch 3 fps	Default	10.577	11.581	12.244	13.006	13.861
Spine	4 fps	Default	2.441	2.684	3.173	3.783	4.519
	2 fps	Default	3.050	3.352	3.962	4.729	5.646

		Field of View	0	1	2	3	4
		Field Size (cm)	30	27	22	19	15
Procedure	X-ray Protocol	Patient Type	Reference Air Kerma (mGy/image)				
Thorax	Lungs 2 fps	Default	3.692	3.915	4.264	4.683	5.161
	Subclavian 3 fps	Default	12.819	14.979	14.979	14.979	14.979
Abdomen	Abdomen	Default	5.656	6.215	7.351	8.767	10.456
	3 fps	Large Adult, Very Large Adult	4.985	5.485	6.475	7.726	9.217
	Iliac / Pelvis 3 fps	Default	10.803	11.882	14.028	16.732	19.956
Peripheral	Upper Legs 3 fps	Default	6.762	7.096	7.749	8.528	9.433
	Lower Legs 1 fps	Default	7.254	7.608	8.292	9.091	10.024

Roadmap - F20/12 Frontal Stand

		Field of View	0	1	2	3	4	5	6	7
		Field Size (cm)	48	42	37	31	27	22	19	15
Procedure	Mode	Patient Type	Reference Air Kerma (mGy/image)							
Cardio	Navigate	Default	0.233	0.287	0.313	0.356	0.405	0.466	0.496	0.496
	UnSubtract	Default	0.233	0.287	0.313	0.356	0.405	0.466	0.496	0.496
Pediatrics	Navigate	Default	0.233	0.287	0.313	0.356	0.405	0.466	0.496	0.496
	UnSubtract	Default	0.233	0.287	0.313	0.356	0.405	0.466	0.496	0.496
EP	Navigate	Default	0.233	0.287	0.313	0.356	0.405	0.466	0.496	0.496
EP Bio-sense Carto	Navigate	Default	0.233	0.287	0.313	0.356	0.405	0.466	0.496	0.496
Head	Navigate	Default	0.233	0.287	0.313	0.356	0.405	0.466	0.496	0.496
	Carotid	Default	0.201	0.240	0.258	0.287	0.320	0.363	0.383	0.383
	Coil	Default	1.065	1.383	1.544	1.810	2.129	2.553	2.984	3.670
Spine	UnSubtract	Default	0.233	0.287	0.313	0.356	0.405	0.466	0.496	0.496
	Navigate	Default	0.233	0.287	0.313	0.356	0.405	0.466	0.496	0.496
	Stent	Default	0.201	0.240	0.258	0.287	0.320	0.363	0.383	0.383
Thorax	UnSubtract	Default	0.233	0.287	0.313	0.356	0.405	0.466	0.496	0.496
	Navigate	Default	0.233	0.287	0.313	0.356	0.405	0.466	0.496	0.496
	Interven-tion	Default	0.201	0.240	0.258	0.287	0.320	0.363	0.383	0.383
Abdomen	UnSubtract	Default	0.233	0.287	0.313	0.356	0.405	0.466	0.496	0.496
	Navigate	Default	0.233	0.287	0.313	0.356	0.405	0.466	0.496	0.496
	Stent	Default	0.201	0.240	0.258	0.287	0.320	0.363	0.383	0.383
Peripheral	UnSubtract	Default	0.233	0.287	0.313	0.356	0.405	0.466	0.496	0.496
	Navigate	Default	0.233	0.287	0.313	0.356	0.405	0.466	0.496	0.496

Roadmap - F20/12 Lateral Stand

		Field of View	0	1	2	3	4
		Field Size (cm)	30	27	22	19	15
Procedure	Mode	Patient Type	Reference Air Kerma (mGy/image)				
Cardio	Navigate	Default	0.493	0.623	0.623	0.623	0.623
	UnSubtract	Default	0.493	0.623	0.623	0.623	0.623

		Field of View	0	1	2	3	4
		Field Size (cm)	30	27	22	19	15
Procedure	Mode	Patient Type	Reference Air Kerma (mGy/image)				
Pediatrics	Navigate	Default	0.493	0.623	0.623	0.623	0.623
	UnSubtract	Default	0.493	0.623	0.623	0.623	0.623
EP	Navigate	Default	0.493	0.623	0.623	0.623	0.623
EP Biosense Carto	Navigate	Default	0.493	0.623	0.623	0.623	0.623
Head	Navigate	Default	0.493	0.623	0.623	0.623	0.623
	Carotid	Default	0.464	0.567	0.567	0.567	0.567
	Coil	Default	2.691	2.963	3.501	4.172	4.983
Spine	UnSubtract	Default	0.493	0.623	0.623	0.623	0.623
	Navigate	Default	0.493	0.623	0.623	0.623	0.623
	Stent	Default	0.464	0.567	0.567	0.567	0.567
Thorax	UnSubtract	Default	0.493	0.623	0.623	0.623	0.623
	Navigate	Default	0.493	0.623	0.623	0.623	0.623
	Intervention	Default	0.464	0.567	0.567	0.567	0.567
Abdomen	UnSubtract	Default	0.493	0.623	0.623	0.623	0.623
	Navigate	Default	0.493	0.623	0.623	0.623	0.623
	Stent	Default	0.464	0.567	0.567	0.567	0.567
Peripheral	UnSubtract	Default	0.493	0.623	0.623	0.623	0.623
	Navigate	Default	0.493	0.623	0.623	0.623	0.623

16.20.10 Biplane F20/12 Systems with ClarityIQ Option

Radioscopy (Fluoroscopy) - F20/12 with ClarityIQ Frontal Stand

		Field of View	0	1	2	3	4	5	6	7
		Field Size (cm)	48	42	37	31	27	22	19	15
Procedure	Flavor	Patient Type	Reference Air Kerma (mGy/s)							
Cardio Clarity	Low	Default	0.089	0.111	0.121	0.138	0.157	0.181	0.205	0.241
	Medium	Default	0.134	0.166	0.182	0.208	0.238	0.278	0.316	0.377
	Normal	Default	0.313	0.385	0.419	0.474	0.537	0.620	0.701	0.827
Cardio Pedia-trics Clarity <40 kg	Low	Default	0.039	0.048	0.053	0.060	0.069	0.080	0.091	0.109
	Medium	Default	0.057	0.071	0.078	0.089	0.103	0.120	0.137	0.159
	Normal	Default	0.087	0.108	0.118	0.135	0.155	0.179	0.203	0.240
Cardio Pedia-trics Clarity >40 kg	Low	Default	0.039	0.048	0.053	0.060	0.069	0.080	0.091	0.109
	Medium	Default	0.057	0.071	0.078	0.089	0.103	0.120	0.137	0.159
	Normal	Default	0.087	0.108	0.118	0.135	0.155	0.179	0.203	0.240
EP Clarity	Low	Default	0.035	0.035	0.035	0.040	0.046	0.053	0.059	0.068
	Medium	Default	0.070	0.070	0.070	0.079	0.090	0.105	0.117	0.136
	Normal	Default	0.090	0.090	0.090	0.102	0.118	0.138	0.158	0.189
EP Biosense Clarity	Low	Default	0.035	0.035	0.035	0.040	0.046	0.053	0.059	0.068
	Medium	Default	0.070	0.070	0.070	0.079	0.090	0.105	0.117	0.136
	Normal	Default	0.090	0.090	0.090	0.102	0.118	0.138	0.158	0.189

		Field of View	0	1	2	3	4	5	6	7
		Field Size (cm)	48	42	37	31	27	22	19	15
Procedure	Flavor	Patient Type	Reference Air Kerma (mGy/s)							
Head Clarity	Low	Default	0.123	0.148	0.160	0.178	0.208	0.244	0.273	0.305
	Medium	Default	0.187	0.234	0.256	0.294	0.346	0.402	0.445	0.493
	Normal	Default	0.330	0.409	0.447	0.509	0.580	0.672	0.762	0.905
Spine Clarity	Low	Default	0.123	0.148	0.160	0.178	0.208	0.244	0.273	0.305
	Medium	Default	0.187	0.234	0.256	0.294	0.346	0.402	0.445	0.493
	Normal	Default	0.330	0.409	0.447	0.509	0.580	0.672	0.762	0.905
Thorax Clarity	Low	Default	0.123	0.148	0.160	0.178	0.208	0.244	0.273	0.305
	Medium	Default	0.187	0.234	0.256	0.294	0.346	0.402	0.445	0.493
	Normal	Default	0.330	0.409	0.447	0.509	0.580	0.672	0.762	0.905
Abdomen Clarity	Low	Default	0.123	0.148	0.160	0.178	0.208	0.244	0.273	0.305
	Medium	Default	0.187	0.234	0.256	0.294	0.346	0.402	0.445	0.493
	Normal	Default	0.330	0.409	0.447	0.509	0.580	0.672	0.762	0.905
Peripheral Clarity	Low	Default	0.123	0.148	0.160	0.178	0.208	0.244	0.273	0.305
	Medium	Default	0.187	0.234	0.256	0.294	0.346	0.402	0.445	0.493
	Normal	Default	0.330	0.409	0.447	0.509	0.580	0.672	0.762	0.905

Radioscopy (Fluoroscopy) - F20/12 with ClarityIQ Lateral Stand

		Field of View	0	1	2	3	4
		Field Size (cm)	30	27	22	19	15
Procedure	Flavor	Patient Type	Reference Air Kerma (mGy/s)				
Cardio Clarity	Low	Default	0.200	0.217	0.249	0.288	0.333
	Medium	Default	0.300	0.325	0.374	0.434	0.505
	Normal	Default	0.673	0.726	0.827	0.952	1.095
Cardio Pediatrics Clarity <40 kg	Low	Default	0.087	0.095	0.109	0.127	0.148
	Medium	Default	0.130	0.141	0.160	0.183	0.211
	Normal	Default	0.198	0.215	0.247	0.287	0.333
Cardio Pediatrics Clarity >40 kg	Low	Default	0.087	0.095	0.109	0.127	0.148
	Medium	Default	0.130	0.141	0.160	0.183	0.211
	Normal	Default	0.198	0.215	0.247	0.287	0.333
EP Clarity	Low	Default	0.061	0.066	0.076	0.086	0.097
	Medium	Default	0.124	0.134	0.154	0.174	0.198
	Normal	Default	0.148	0.161	0.186	0.217	0.253
EP Biosense Clarity	Low	Default	0.061	0.066	0.076	0.086	0.097
	Medium	Default	0.124	0.134	0.154	0.174	0.198
	Normal	Default	0.148	0.161	0.186	0.217	0.253
Head Clarity	Low	Default	0.267	0.287	0.327	0.375	0.432
	Medium	Default	0.429	0.461	0.522	0.599	0.687
	Normal	Default	0.744	0.804	0.921	1.062	1.230
Spine Clarity	Low	Default	0.267	0.287	0.327	0.375	0.432
	Medium	Default	0.429	0.461	0.522	0.599	0.687
	Normal	Default	0.744	0.804	0.921	1.062	1.230

		Field of View	0	1	2	3	4
		Field Size (cm)	30	27	22	19	15
Procedure	Flavor	Patient Type	Reference Air Kerma (mGy/s)				
Thorax Clarity	Low	Default	0.267	0.287	0.327	0.375	0.432
	Medium	Default	0.429	0.461	0.522	0.599	0.687
	Normal	Default	0.744	0.804	0.921	1.062	1.230
Abdomen Clarity	Low	Default	0.267	0.287	0.327	0.375	0.432
	Medium	Default	0.429	0.461	0.522	0.599	0.687
	Normal	Default	0.744	0.804	0.921	1.062	1.230
Peripheral Clarity	Low	Default	0.267	0.287	0.327	0.375	0.432
	Medium	Default	0.429	0.461	0.522	0.599	0.687
	Normal	Default	0.744	0.804	0.921	1.062	1.230

Radiography (Exposure) - F20/12 with ClarityIQ Frontal Stand

		Field of View	0	1	2	3	4	5	6	7
		Field Size (cm)	48	42	37	31	27	22	19	15
Procedure	X-ray Protocol	Patient Type	Reference Air Kerma (mGy/image)							
Cardio Clarity	Left Coronary 15 fps Low	Default	0.022	0.027	0.030	0.034	0.039	0.046	0.053	0.063
	Rotational Scan Prop Ang0 4s	Default	0.118	0.146	0.159	0.181	0.206	0.239	0.269	0.317
		Infant	0.039	0.048	0.052	0.058	0.066	0.076	0.086	0.101
		Neonate	0.025	0.032	0.035	0.040	0.046	0.054	0.063	0.076
Cardio Pediatrics Clarity <40 kg	15 fps Contrast low	Default	0.012	0.015	0.016	0.018	0.021	0.024	0.027	0.032
	15 fps Contrast normal	Default	0.018	0.023	0.025	0.029	0.034	0.040	0.045	0.052
Cardio Pediatrics Clarity >40 kg	15 fps Contrast low	Default	0.022	0.027	0.030	0.034	0.039	0.046	0.053	0.063
		Neonate, Infant, Child	0.012	0.015	0.016	0.018	0.021	0.024	0.027	0.032
	15 fps Contrast normal	Default	0.047	0.058	0.064	0.073	0.083	0.097	0.110	0.130
		Neonate, Infant, Child	0.018	0.023	0.025	0.029	0.034	0.040	0.045	0.052
EP Clarity	15 fps	Default	0.022	0.027	0.030	0.034	0.039	0.046	0.053	0.063
	Prop 4s	Default	0.141	0.180	0.225	0.225	0.225	0.225	0.225	0.225
		Neonate, Infant	0.094	0.121	0.153	0.153	0.153	0.153	0.153	0.153
		Large Adult, Very Large Adult	0.141	0.180	0.225	0.225	0.225	0.225	0.225	0.225
EP Biosense Clarity	7.5 fps	Default	0.022	0.027	0.030	0.034	0.039	0.046	0.053	0.063
	3D EP Prop 4s	Default	0.141	0.180	0.225	0.225	0.225	0.225	0.225	0.225
		Neonate, Infant	0.094	0.121	0.153	0.153	0.153	0.153	0.153	0.153
		Large Adult, Very Large Adult	0.141	0.180	0.225	0.225	0.225	0.225	0.225	0.225

		Field of View	0	1	2	3	4	5	6	7
		Field Size (cm)	48	42	37	31	27	22	19	15
Procedure	X-ray Protocol	Patient Type	Reference Air Kerma (mGy/image)							
Head Clarity	Cerebral 2 fps low	Default	0.570	0.741	0.827	0.969	1.141	1.367	1.595	1.882
	Aortic Arch 3 fps	Default	0.815	1.059	1.181	1.385	1.629	1.956	2.280	2.689
Spine Clarity	4 fps	Default	0.672	0.875	0.975	1.142	1.345	1.614	1.883	2.221
	2 fps	Default	0.673	0.875	0.974	1.142	1.344	1.612	1.882	2.221
Thorax Clarity	Lungs 2 fps	Default	0.713	0.928	1.036	1.213	1.429	1.713	1.999	2.355
	Subclavian 3 fps	Default	0.965	1.254	1.398	1.639	1.928	2.313	2.699	3.180
Abdomen Clarity	3 fps low	Default	0.748	0.972	1.084	1.272	1.497	1.793	2.095	2.465
	Iliac / Pelvis 3 fps	Default	0.714	0.927	1.034	1.214	1.428	1.714	1.998	2.356
Peripheral Clarity	Upper Legs 3 fps	Default	0.631	0.802	0.868	0.973	1.097	1.236	1.366	1.523
	Lower Legs 1 fps	Default	1.127	1.465	1.633	1.915	2.123	2.384	2.625	2.911

Radiography (Exposure) - F20/12 with ClarityIQ Lateral Stand

		Field of View	0	1	2	3	4
		Field Size (cm)	30	27	22	19	15
Procedure	X-ray Protocol	Patient Type	Reference Air Kerma (mGy/image)				
Cardio Clarity	Left Coronary 15 fps Low	Default	0.050	0.055	0.063	0.073	0.085
	Rotational Scan Prop Ang0 4s	Default	-	-	-	-	-
		Infant	-	-	-	-	-
		Neonate	-	-	-	-	-
Cardio Pediatrics Clarity <40 kg	15 fps Contrast low	Default	0.027	0.029	0.033	0.038	0.044
	15 fps Contrast normal	Default	0.043	0.047	0.054	0.061	0.070
Cardio Pediatrics Clarity >40 kg	15 fps Contrast low	Default	0.050	0.055	0.063	0.073	0.085
		Neonate, Infant, Child	0.027	0.029	0.033	0.038	0.044
	15 fps Contrast normal	Default	0.102	0.110	0.126	0.146	0.169
		Neonate, Infant, Child	0.043	0.047	0.054	0.061	0.070
EP Clarity	15 fps	Default	0.050	0.055	0.063	0.073	0.085
	Prop 4s	Default	-	-	-	-	-
		Neonate, Infant	-	-	-	-	-
		Large Adult, Very Large Adult	-	-	-	-	-
EP Biosense Clarity	7.5 fps	Default	0.050	0.055	0.063	0.073	0.085
	3D EP Prop 4s	Default	-	-	-	-	-
		Neonate, Infant	-	-	-	-	-
		Large Adult, Very Large Adult	-	-	-	-	-
Head Clarity	Cerebral 2 fps low	Default	1.456	1.602	1.894	2.258	2.696
	Aortic Arch 3 fps	Default	2.097	2.305	2.725	3.247	3.878

		Field of View	0	1	2	3	4
		Field Size (cm)	30	27	22	19	15
Procedure	X-ray Protocol	Patient Type	Reference Air Kerma (mGy/image)				
Spine Clarity	4 fps	Default	1.659	1.821	2.154	2.569	3.064
	2 fps	Default	1.658	1.824	2.156	2.570	3.064
Thorax Clarity	Lungs 2 fps	Default	1.841	2.022	2.393	2.849	3.407
	Subclavian 3 fps	Default	2.477	2.724	3.222	3.839	4.585
Abdomen Clarity	3 fps low	Default	1.927	2.119	2.505	2.988	3.564
	Iliac / Pelvis 3 fps	Default	1.840	2.024	2.392	2.850	3.407
Peripheral Clarity	Upper Legs 3 fps	Default	1.589	1.685	1.869	2.093	2.348
	Lower Legs 1 fps	Default	2.897	3.181	3.760	4.258	4.743

Roadmap - F20/12 with ClarityIQ Frontal Stand

		Field of View	0	1	2	3	4	5	6	7
		Field Size (cm)	48	42	37	31	27	22	19	15
Procedure	Mode	Patient Type	Reference Air Kerma (mGy/image)							
Cardio Clarity	Navigate	Default	0.093	0.113	0.122	0.137	0.154	0.177	0.199	0.232
	UnSubtract	Default	0.093	0.113	0.122	0.137	0.154	0.177	0.199	0.232
Cardio Pediatrics Clarity <40 kg	Navigate	Default	0.093	0.113	0.122	0.137	0.154	0.177	0.199	0.232
	UnSubtract	Default	0.093	0.113	0.122	0.137	0.154	0.177	0.199	0.232
Cardio Pediatrics Clarity >40 kg	Navigate	Default	0.093	0.113	0.122	0.137	0.154	0.177	0.199	0.232
	UnSubtract	Default	0.093	0.113	0.122	0.137	0.154	0.177	0.199	0.232
EP Clarity	Navigate	Default	0.093	0.113	0.122	0.137	0.154	0.177	0.199	0.232
	UnSubtract	Default	0.093	0.113	0.122	0.137	0.154	0.177	0.199	0.232
EP Biosense Clarity	Navigate	Default	0.093	0.113	0.122	0.137	0.154	0.177	0.199	0.232
	UnSubtract	Default	0.093	0.113	0.122	0.137	0.154	0.177	0.199	0.232
Head Clarity	Navigate	Default	0.093	0.113	0.122	0.137	0.154	0.177	0.199	0.232
	Coil	Default	0.192	0.249	0.278	0.325	0.383	0.459	0.536	0.660
	Unsubtract	Default	0.093	0.113	0.122	0.137	0.154	0.177	0.199	0.232
Spine Clarity	Navigate	Default	0.093	0.113	0.122	0.137	0.154	0.177	0.199	0.232
	Coil	Default	0.192	0.249	0.278	0.325	0.383	0.459	0.536	0.660
	Unsubtract	Default	0.093	0.113	0.122	0.137	0.154	0.177	0.199	0.232
Thorax Clarity	UnSubtract	Default	0.093	0.113	0.122	0.137	0.154	0.177	0.199	0.232
	Navigate	Default	0.093	0.113	0.122	0.137	0.154	0.177	0.199	0.232
Abdomen Clarity	UnSubtract	Default	0.093	0.113	0.122	0.137	0.154	0.177	0.199	0.232
	Navigate	Default	0.093	0.113	0.122	0.137	0.154	0.177	0.199	0.232
Peripheral Clarity	UnSubtract	Default	0.093	0.113	0.122	0.137	0.154	0.177	0.199	0.232
	Navigate	Default	0.093	0.113	0.122	0.137	0.154	0.177	0.199	0.232

Roadmap - F20/12 with ClarityIQ Lateral Stand

		Field of View	0	1	2	3	4
		Field Size (cm)	30	27	22	19	15
Procedure	Mode	Patient Type	Reference Air Kerma (mGy/image)				
Cardio Clarity	Navigate	Default	0.222	0.238	0.268	0.305	0.346
	UnSubtract	Default	0.222	0.238	0.268	0.305	0.346
Cardio Pediatrics Clarity <40 kg	Navigate	Default	0.222	0.238	0.268	0.305	0.346
	UnSubtract	Default	0.222	0.238	0.268	0.305	0.346
Cardio Pediatrics Clarity >40 kg	Navigate	Default	0.222	0.238	0.268	0.305	0.346
	UnSubtract	Default	0.222	0.238	0.268	0.305	0.346
EP Clarity	Navigate	Default	0.222	0.238	0.268	0.305	0.346
	UnSubtract	Default	0.222	0.238	0.268	0.305	0.346
EP Biosense Clarity	Navigate	Default	0.222	0.238	0.268	0.305	0.346
	UnSubtract	Default	0.222	0.238	0.268	0.305	0.346
Head Clarity	Navigate	Default	0.222	0.238	0.268	0.305	0.346
	Coil	Default	0.493	0.542	0.641	0.764	0.890
	Unsubtract	Default	0.222	0.238	0.268	0.305	0.346
Spine Clarity	Navigate	Default	0.222	0.238	0.268	0.305	0.346
	Coil	Default	0.493	0.542	0.641	0.764	0.890
	Unsubtract	Default	0.222	0.238	0.268	0.305	0.346
Thorax Clarity	UnSubtract	Default	0.222	0.238	0.268	0.305	0.346
	Navigate	Default	0.222	0.238	0.268	0.305	0.346
Abdomen Clarity	UnSubtract	Default	0.222	0.238	0.268	0.305	0.346
	Navigate	Default	0.222	0.238	0.268	0.305	0.346
Peripheral Clarity	UnSubtract	Default	0.222	0.238	0.268	0.305	0.346
	Navigate	Default	0.222	0.238	0.268	0.305	0.346

16.20.11 Biplane F20/15 Systems

Radioscopy (Fluoroscopy) - F20/15 Frontal Stand

		Field of View	0	1	2	3	4	5	6	7
		Field Size (cm)	48	42	37	31	27	22	19	15
Procedure	Flavor	Patient Type	Reference Air Kerma (mGy/s)							
Cardio	Low	Default	0.122	0.155	0.171	0.197	0.228	0.269	0.309	0.372
	Norm	Default	0.323	0.393	0.426	0.480	0.543	0.623	0.696	0.786
	High	Default	0.423	0.521	0.568	0.643	0.730	0.842	0.951	1.112
Pediatrics	Low	Default	0.112	0.140	0.154	0.176	0.203	0.237	0.271	0.309
	Norm	Default	0.253	0.313	0.343	0.390	0.443	0.501	0.557	0.645
	High	Default	0.428	0.514	0.553	0.615	0.663	0.724	0.782	0.871
EP	Low	Default	0.058	0.073	0.081	0.091	0.103	0.118	0.136	0.149
	Norm	Default	0.127	0.158	0.173	0.198	0.237	0.266	0.325	0.368
	High	Default	0.148	0.188	0.207	0.239	0.277	0.326	0.375	0.452

	Field of View	0	1	2	3	4	5	6	7
	Field Size (cm)	48	42	37	31	27	22	19	15
Procedure	Flavor	Patient Type	Reference Air Kerma (mGy/s)							
EP Biosense Carto	Low	Default	0.030	0.037	0.041	0.046	0.053	0.060	0.070	0.077
	Norm	Default	0.065	0.081	0.089	0.102	0.121	0.136	0.166	0.187
	High	Default	0.076	0.096	0.105	0.122	0.141	0.166	0.191	0.230
Head	Low	Default	0.136	0.171	0.188	0.216	0.249	0.282	0.315	0.348
	Norm	Default	0.275	0.341	0.373	0.426	0.503	0.589	0.657	0.731
	High	Default	0.444	0.545	0.594	0.674	0.767	0.887	0.987	1.122
Spine	Low	Default	0.136	0.171	0.188	0.216	0.249	0.282	0.315	0.348
	Norm	Default	0.275	0.341	0.373	0.426	0.503	0.589	0.657	0.731
	High	Default	0.444	0.545	0.594	0.674	0.767	0.887	0.987	1.122
Thorax	Low	Default	0.136	0.171	0.188	0.216	0.249	0.282	0.315	0.348
	Norm	Default	0.275	0.341	0.373	0.426	0.503	0.589	0.657	0.731
	High	Default	0.444	0.545	0.594	0.674	0.767	0.887	0.987	1.122
Abdomen	Low	Default	0.136	0.171	0.188	0.216	0.249	0.282	0.315	0.348
	Norm	Default	0.275	0.341	0.373	0.426	0.503	0.589	0.657	0.731
	High	Default	0.444	0.545	0.594	0.674	0.767	0.887	0.987	1.122
Peripheral	Low	Default	0.136	0.171	0.188	0.216	0.249	0.282	0.315	0.348
	Norm	Default	0.275	0.341	0.373	0.426	0.503	0.589	0.657	0.731
	High	Default	0.444	0.545	0.594	0.674	0.767	0.887	0.987	1.122

Radioscopy (Fluoroscopy) - F20/15 Lateral Stand

	Field of View	0	1	2	3	4	5	6
	Field Size (cm)	39	37	31	27	22	19	15
Procedure	Flavor	Patient Type	Reference Air Kerma (mGy/s)						
Cardio	Low	Default	0.262	0.285	0.330	0.376	0.443	0.519	0.616
	Norm	Default	0.524	0.564	0.641	0.714	0.823	0.941	1.054
	High	Default	0.696	0.751	0.858	0.961	1.112	1.282	1.493
Pediatrics	Low	Default	0.188	0.204	0.236	0.267	0.313	0.366	0.418
	Norm	Default	0.451	0.489	0.561	0.628	0.715	0.810	0.930
	High	Default	0.680	0.728	0.818	0.905	0.993	1.087	1.202
EP	Low	Default	0.095	0.104	0.121	0.137	0.162	0.190	0.224
	Norm	Default	0.220	0.239	0.276	0.313	0.367	0.431	0.512
	High	Default	0.271	0.293	0.338	0.383	0.448	0.523	0.617
EP Biosense Carto	Low	Default	0.048	0.053	0.061	0.070	0.082	0.097	0.115
	Norm	Default	0.113	0.123	0.141	0.160	0.188	0.219	0.260
	High	Default	0.134	0.145	0.169	0.191	0.226	0.264	0.314
Head	Low	Default	0.212	0.231	0.271	0.311	0.370	0.438	0.517
	Norm	Default	0.497	0.531	0.600	0.668	0.767	0.878	1.019
	High	Default	0.774	0.835	0.957	1.075	1.248	1.444	1.668
Spine	Low	Default	0.212	0.231	0.271	0.311	0.370	0.438	0.517
	Norm	Default	0.497	0.531	0.600	0.668	0.767	0.878	1.019
	High	Default	0.774	0.835	0.957	1.075	1.248	1.444	1.668

		Field of View	0	1	2	3	4	5	6
		Field Size (cm)	39	37	31	27	22	19	15
Procedure	Flavor	Patient Type	Reference Air Kerma (mGy/s)						
Thorax	Low	Default	0.212	0.231	0.271	0.311	0.370	0.438	0.517
	Norm	Default	0.497	0.531	0.600	0.668	0.767	0.878	1.019
	High	Default	0.774	0.835	0.957	1.075	1.248	1.444	1.668
Abdomen	Low	Default	0.212	0.231	0.271	0.311	0.370	0.438	0.517
	Norm	Default	0.497	0.531	0.600	0.668	0.767	0.878	1.019
	High	Default	0.774	0.835	0.957	1.075	1.248	1.444	1.668
Peripheral	Low	Default	0.212	0.231	0.271	0.311	0.370	0.438	0.517
	Norm	Default	0.497	0.531	0.600	0.668	0.767	0.878	1.019
	High	Default	0.774	0.835	0.957	1.075	1.248	1.444	1.668

Radiography (Exposure) - F20/15 Frontal Stand

		Field of View	0	1	2	3	4	5	6	7
		Field Size (cm)	48	42	37	31	27	22	19	15
Procedure	X-ray Protocol	Patient Type	Reference Air Kerma (mGy/image)							
Cardio	Left Coronary	Default	0.061	0.076	0.083	0.095	0.108	0.125	0.142	0.168
	15 fps Low	Infant	0.046	0.054	0.058	0.064	0.071	0.081	0.090	0.104
		Large Adult, Very Large Adult	0.060	0.075	0.082	0.093	0.107	0.124	0.141	0.166
		Neonate	0.025	0.032	0.035	0.040	0.046	0.054	0.063	0.076
	Rotational Scan	Default	0.116	0.143	0.157	0.179	0.204	0.236	0.267	0.314
	Prop Ang0 4s	Infant	0.039	0.048	0.052	0.058	0.066	0.076	0.086	0.101
		Neonate	0.025	0.032	0.035	0.040	0.046	0.054	0.063	0.076
Pediatrics	15 fps Contrast Normal	Default	0.118	0.146	0.160	0.181	0.206	0.238	0.269	0.317
		Child, Small Adult	0.069	0.086	0.094	0.107	0.123	0.142	0.161	0.188
		Infant	0.039	0.048	0.052	0.058	0.066	0.076	0.086	0.101
		Neonate	0.025	0.032	0.035	0.040	0.046	0.054	0.063	0.076
	Prop Free Position	Default	0.114	0.142	0.155	0.177	0.202	0.234	0.265	0.314
		Neonate, Infant	0.027	0.033	0.036	0.041	0.047	0.054	0.062	0.074
EP	15 fps	Default	0.069	0.086	0.094	0.107	0.123	0.142	0.161	0.188
	Prop 4s	Default	0.141	0.180	0.225	0.225	0.225	0.225	0.225	0.225
		Neonate, Infant	0.094	0.121	0.153	0.153	0.153	0.153	0.153	0.153
		Large Adult, Very Large Adult	0.141	0.180	0.225	0.225	0.225	0.225	0.225	0.225

Procedure	X-ray Protocol	Field of View	0	1	2	3	4	5	6	7
		Field Size (cm)	48	42	37	31	27	22	19	15
		Patient Type	Reference Air Kerma (mGy/image)							
EP Biosence Carto	7.5 fps low	Default	0.011	0.014	0.015	0.017	0.019	0.022	0.025	0.028
	3D EP Prop 4s	Default	0.141	0.180	0.225	0.225	0.225	0.225	0.225	0.225
		Neonate, Infant	0.094	0.121	0.153	0.153	0.153	0.153	0.153	0.153
		Large Adult, Very Large Adult	0.141	0.180	0.225	0.225	0.225	0.225	0.225	0.225
Head	Cerebral 2 fps normal	Default	2.856	3.713	4.139	4.848	5.711	6.852	7.867	8.549
		Child	1.839	2.207	2.384	2.677	3.022	3.482	3.945	4.534
		Neonate, Infant	1.839	2.207	2.384	2.677	3.022	3.482	3.945	4.534
	Aortic Arch 3 fps	Default	4.232	5.502	6.139	7.198	8.155	8.155	8.155	8.155
Spine	4 fps	Default	1.195	1.556	1.734	2.034	2.393	2.869	3.352	4.126
	2 fps	Default	1.495	1.944	2.168	2.540	2.993	3.591	4.184	5.163
Thorax	Lungs 2 fps	Default	1.427	1.856	2.071	2.428	2.657	2.919	3.169	3.474
	Subclavian 3 fps	Default	5.136	6.669	7.447	8.718	10.268	11.183	11.737	12.575
Abdomen	Abdomen	Default	2.619	3.406	3.801	4.455	5.243	6.296	7.334	7.334
	3 fps	Large Adult, Very Large Adult	2.306	2.995	3.342	3.922	4.613	5.530	6.457	7.953
	Iliac / Pelvis 3 fps	Default	4.262	5.538	6.173	7.243	8.517	10.218	11.918	14.041
Peripheral	Upper Legs 3 fps	Default	3.690	4.793	5.292	5.691	6.142	6.705	7.241	7.869
	Lower Legs 1 fps	Default	4.509	5.620	5.922	6.361	6.850	7.454	8.029	8.708

Radiography (Exposure) - F20/15 Lateral Stand

Procedure	X-ray Protocol	Field of View	0	1	2	3	4	5	6
		Field Size (cm)	39	37	31	27	22	19	15
		Patient Type	Reference Air Kerma (mGy/image)						
Cardio	Left Coronary	Default	0.100	0.108	0.124	0.139	0.162	0.188	0.219
	15 fps Low	Infant	0.070	0.074	0.083	0.092	0.105	0.119	0.138
		Large Adult, Very Large Adult	0.100	0.108	0.124	0.139	0.162	0.188	0.219
		Neonate	0.046	0.049	0.057	0.064	0.076	0.089	0.093
	Rotational Scan	Default	-	-	-	-	-	-	-
	Prop Ang0 4s	Infant	-	-	-	-	-	-	-
		Neonate	-	-	-	-	-	-	-

		Field of View	0	1	2	3	4	5	6
		Field Size (cm)	39	37	31	27	22	19	15
Procedure	X-ray Protocol	Patient Type	Reference Air Kerma (mGy/image)						
Pediatrics	15 fps Contrast Normal	Default	0.187	0.202	0.231	0.258	0.299	0.344	0.399
		Child, Small Adult	0.113	0.122	0.141	0.158	0.184	0.212	0.248
		Infant	0.067	0.072	0.081	0.091	0.105	0.121	0.142
		Neonate	0.045	0.049	0.057	0.065	0.077	0.090	0.108
	Prop Free Position	Default	-	-	-	-	-	-	-
		Neonate, Infant	-	-	-	-	-	-	-
EP	15 fps	Default	0.113	0.122	0.141	0.158	0.184	0.212	0.248
	Prop 4s	Default	-	-	-	-	-	-	-
		Neonate, Infant	-	-	-	-	-	-	-
		Large Adult, Very Large Adult	-	-	-	-	-	-	-
EP Biosence Carto	7.5 fps low	Default	0.018	0.019	0.023	0.026	0.030	0.036	0.042
	3D EP Prop 4s	Default	-	-	-	-	-	-	-
		Neonate, Infant	-	-	-	-	-	-	-
		Large Adult, Very Large Adult	-	-	-	-	-	-	-
Head	Cerebral 2 fps normal	Default	5.093	5.597	6.615	7.258	7.985	8.807	9.820
		Child	3.253	3.482	3.925	4.368	5.019	5.788	6.784
		Neonate, Infant	3.253	3.482	3.925	4.368	5.019	5.788	6.784
	Aortic Arch 3 fps	Default	7.351	8.097	9.561	11.031	11.031	11.031	11.031
Spine	4 fps	Default	1.705	1.877	2.216	2.559	3.068	3.662	4.436
	2 fps	Default	2.135	2.346	2.770	3.197	3.837	4.587	5.550
Thorax	Lungs 2 fps	Default	2.561	2.815	3.328	3.784	4.159	4.581	5.098
	Subclavian 3 fps	Default	8.863	9.750	11.532	13.286	14.407	15.756	15.756
Abdomen	Abdomen	Default	4.597	5.056	5.972	6.896	8.273	9.885	10.475
	3 fps	Large Adult, Very Large Adult	4.063	4.474	5.289	6.105	7.326	8.734	10.568
	Iliac / Pelvis 3 fps	Default	7.471	8.209	9.708	11.214	13.446	16.044	19.432
Peripheral	Upper Legs 3 fps	Default	5.559	5.823	6.331	6.821	7.514	8.299	9.268
	Lower Legs 1 fps	Default	5.969	6.247	6.778	7.286	8.013	8.810	9.809

Roadmap - F20/15 Frontal Stand

		Field of View	0	1	2	3	4	5	6	7
		Field Size (cm)	48	42	37	31	27	22	19	15
Procedure	Mode	Patient Type	Reference Air Kerma (mGy/image)							
Cardio	Navigate	Default	0.233	0.287	0.313	0.356	0.405	0.466	0.496	0.496
	UnSubtract	Default	0.233	0.287	0.313	0.356	0.405	0.466	0.496	0.496
Pediatrics	Navigate	Default	0.233	0.287	0.313	0.356	0.405	0.466	0.496	0.496
	UnSubtract	Default	0.233	0.287	0.313	0.356	0.405	0.466	0.496	0.496

		Field of View	0	1	2	3	4	5	6	7
		Field Size (cm)	48	42	37	31	27	22	19	15
Procedure	Mode	Patient Type	Reference Air Kerma (mGy/image)							
EP	Navigate	Default	0.233	0.287	0.313	0.356	0.405	0.466	0.496	0.496
EP Bio-sense Carto	Navigate	Default	0.233	0.287	0.313	0.356	0.405	0.466	0.496	0.496
Head	Navigate	Default	0.233	0.287	0.313	0.356	0.405	0.466	0.496	0.496
	Carotid	Default	0.201	0.240	0.258	0.287	0.320	0.363	0.383	0.383
	Coil	Default	1.065	1.383	1.544	1.810	2.129	2.553	2.984	3.670
Spine	UnSubtract	Default	0.233	0.287	0.313	0.356	0.405	0.466	0.496	0.496
	Navigate	Default	0.233	0.287	0.313	0.356	0.405	0.466	0.496	0.496
	Stent	Default	0.201	0.240	0.258	0.287	0.320	0.363	0.383	0.383
Thorax	UnSubtract	Default	0.233	0.287	0.313	0.356	0.405	0.466	0.496	0.496
	Navigate	Default	0.233	0.287	0.313	0.356	0.405	0.466	0.496	0.496
	Interven-tion	Default	0.201	0.240	0.258	0.287	0.320	0.363	0.383	0.383
Abdomen	UnSubtract	Default	0.233	0.287	0.313	0.356	0.405	0.466	0.496	0.496
	Navigate	Default	0.233	0.287	0.313	0.356	0.405	0.466	0.496	0.496
	Stent	Default	0.201	0.240	0.258	0.287	0.320	0.363	0.383	0.383
Peripheral	UnSubtract	Default	0.233	0.287	0.313	0.356	0.405	0.466	0.496	0.496
	Navigate	Default	0.233	0.287	0.313	0.356	0.405	0.466	0.496	0.496

Roadmap - F20/15 Lateral Stand

		Field of View	0	1	2	3	4	5	6
		Field Size (cm)	39	37	31	27	22	19	15
Procedure	Mode	Patient Type	Reference Air Kerma (mGy/image)						
Cardio	Navigate	Default	0.367	0.396	0.452	0.474	0.578	0.671	0.778
	UnSubtract	Default	0.367	0.396	0.452	0.474	0.578	0.671	0.778
Pediatrics	Navigate	Default	0.367	0.396	0.452	0.474	0.578	0.671	0.778
	UnSubtract	Default	0.367	0.396	0.452	0.474	0.578	0.671	0.778
EP	Navigate	Default	0.367	0.396	0.452	0.474	0.578	0.671	0.778
EP Biosense Carto	Navigate	Default	0.367	0.396	0.452	0.474	0.578	0.671	0.778
Head	Navigate	Default	0.365	0.394	0.450	0.472	0.577	0.623	0.623
	Carotid	Default	0.362	0.385	0.431	0.473	0.534	0.568	0.568
	Coil	Default	1.865	2.052	2.429	2.799	3.361	4.019	4.852
Spine	UnSubtract	Default	0.365	0.394	0.450	0.472	0.577	0.623	0.623
	Navigate	Default	0.365	0.394	0.450	0.472	0.577	0.623	0.623
	Stent	Default	0.362	0.385	0.431	0.473	0.534	0.568	0.568
Thorax	UnSubtract	Default	0.365	0.394	0.450	0.472	0.577	0.623	0.623
	Navigate	Default	0.365	0.394	0.450	0.472	0.577	0.623	0.623
	Intervention	Default	0.362	0.385	0.431	0.473	0.534	0.568	0.568
Abdomen	UnSubtract	Default	0.365	0.394	0.450	0.472	0.577	0.623	0.623
	Navigate	Default	0.365	0.394	0.450	0.472	0.577	0.623	0.623
	Stent	Default	0.362	0.385	0.431	0.473	0.534	0.568	0.568
Peripheral	UnSubtract	Default	0.365	0.394	0.450	0.472	0.577	0.623	0.623
	Navigate	Default	0.365	0.394	0.450	0.472	0.577	0.623	0.623

16.20.12 Biplane F20/15 Systems with ClarityIQ Option

Radioscopy (Fluoroscopy) - F20/15 with ClarityIQ Frontal Stand

		Field of View	0	1	2	3	4	5	6	7
		Field Size (cm)	48	42	37	31	27	22	19	15
Procedure	Flavor	Patient Type	Reference Air Kerma (mGy/s)							
Cardio Clarity	Low	Default	0.086	0.107	0.117	0.133	0.152	0.177	0.201	0.240
	Medium	Default	0.130	0.161	0.177	0.202	0.231	0.270	0.307	0.368
	Normal	Default	0.301	0.369	0.403	0.456	0.517	0.596	0.674	0.796
Cardio Pediatrics Clarity <40 kg	Low	Default	0.037	0.046	0.051	0.058	0.067	0.078	0.089	0.106
	Medium	Default	0.055	0.069	0.076	0.087	0.100	0.116	0.133	0.158
	Normal	Default	0.084	0.105	0.115	0.132	0.151	0.176	0.201	0.240
Cardio Pediatrics Clarity >40 kg	Low	Default	0.037	0.046	0.051	0.058	0.067	0.078	0.089	0.106
	Medium	Default	0.055	0.069	0.076	0.087	0.100	0.116	0.133	0.158
	Normal	Default	0.084	0.105	0.115	0.132	0.151	0.176	0.201	0.240
EP Clarity	Low	Default	0.030	0.030	0.030	0.034	0.039	0.045	0.051	0.060
	Medium	Default	0.061	0.061	0.061	0.069	0.079	0.092	0.104	0.121
	Normal	Default	0.075	0.075	0.075	0.086	0.099	0.117	0.133	0.159
EP Biosense Clarity	Low	Default	0.035	0.035	0.035	0.040	0.046	0.053	0.059	0.068
	Medium	Default	0.070	0.070	0.070	0.079	0.090	0.105	0.117	0.136
	Normal	Default	0.090	0.090	0.090	0.102	0.118	0.138	0.158	0.189
Head Clarity	Low	Default	0.123	0.148	0.160	0.179	0.208	0.244	0.273	0.305
	Medium	Default	0.185	0.232	0.255	0.293	0.346	0.402	0.445	0.493
	Normal	Default	0.320	0.395	0.432	0.491	0.561	0.651	0.738	0.875
Spine Clarity	Low	Default	0.123	0.148	0.160	0.179	0.208	0.244	0.273	0.305
	Medium	Default	0.185	0.232	0.255	0.293	0.346	0.402	0.445	0.493
	Normal	Default	0.320	0.395	0.432	0.491	0.561	0.651	0.738	0.875
Thorax Clarity	Low	Default	0.123	0.148	0.160	0.179	0.208	0.244	0.273	0.305
	Medium	Default	0.185	0.232	0.255	0.293	0.346	0.402	0.445	0.493
	Normal	Default	0.320	0.395	0.432	0.491	0.561	0.651	0.738	0.875
Abdomen Clarity	Low	Default	0.123	0.148	0.160	0.179	0.208	0.244	0.273	0.305
	Medium	Default	0.185	0.232	0.255	0.293	0.346	0.402	0.445	0.493
	Normal	Default	0.320	0.395	0.432	0.491	0.561	0.651	0.738	0.875
Peripheral Clarity	Low	Default	0.123	0.148	0.160	0.179	0.208	0.244	0.273	0.305
	Medium	Default	0.185	0.232	0.255	0.293	0.346	0.402	0.445	0.493
	Normal	Default	0.320	0.395	0.432	0.491	0.561	0.651	0.738	0.875

Radioscopy (Fluoroscopy) - F20/15 with ClarityIQ Lateral Stand

	Field of View	0	1	2	3	4	5	6
	Field Size (cm)	39	37	31	27	22	19	15
Procedure	Flavor	Patient Type	Reference Air Kerma (mGy/s)						
Cardio Clarity	Low	Default	0.146	0.158	0.182	0.205	0.239	0.278	0.327
	Medium	Default	0.217	0.235	0.271	0.306	0.358	0.418	0.492
	Normal	Default	0.495	0.534	0.609	0.683	0.791	0.911	1.063
Cardio Pediatrics Clarity <40 kg	Low	Default	0.062	0.068	0.078	0.088	0.104	0.121	0.143
	Medium	Default	0.093	0.101	0.117	0.132	0.153	0.178	0.207
	Normal	Default	0.141	0.153	0.177	0.199	0.233	0.271	0.318
Cardio Pediatrics Clarity >40 kg	Low	Default	0.062	0.068	0.078	0.088	0.104	0.121	0.143
	Medium	Default	0.093	0.101	0.117	0.132	0.153	0.178	0.207
	Normal	Default	0.141	0.153	0.177	0.199	0.233	0.271	0.318
EP Clarity	Low	Default	0.039	0.043	0.049	0.055	0.064	0.074	0.086
	Medium	Default	0.079	0.085	0.098	0.110	0.128	0.148	0.171
	Normal	Default	0.090	0.098	0.113	0.128	0.150	0.175	0.206
EP Biosense Clarity	Low	Default	0.046	0.050	0.057	0.064	0.075	0.085	0.098
	Medium	Default	0.091	0.099	0.113	0.127	0.148	0.169	0.194
	Normal	Default	0.108	0.117	0.135	0.153	0.179	0.209	0.246
Head Clarity	Low	Default	0.204	0.220	0.250	0.280	0.323	0.371	0.433
	Medium	Default	0.320	0.347	0.399	0.444	0.511	0.587	0.683
	Normal	Default	0.532	0.575	0.659	0.741	0.861	0.997	1.156
Spine Clarity	Low	Default	0.204	0.220	0.250	0.280	0.323	0.371	0.433
	Medium	Default	0.320	0.347	0.399	0.444	0.511	0.587	0.683
	Normal	Default	0.532	0.575	0.659	0.741	0.861	0.997	1.156
Thorax Clarity	Low	Default	0.204	0.220	0.250	0.280	0.323	0.371	0.433
	Medium	Default	0.320	0.347	0.399	0.444	0.511	0.587	0.683
	Normal	Default	0.532	0.575	0.659	0.741	0.861	0.997	1.156
Abdomen Clarity	Low	Default	0.204	0.220	0.250	0.280	0.323	0.371	0.433
	Medium	Default	0.320	0.347	0.399	0.444	0.511	0.587	0.683
	Normal	Default	0.532	0.575	0.659	0.741	0.861	0.997	1.156
Peripheral Clarity	Low	Default	0.204	0.220	0.250	0.280	0.323	0.371	0.433
	Medium	Default	0.320	0.347	0.399	0.444	0.511	0.587	0.683
	Normal	Default	0.532	0.575	0.659	0.741	0.861	0.997	1.156

Radiography (Exposure) - F20/15 with ClarityIQ Frontal Stand

		Field of View	0	1	2	3	4	5	6	7
		Field Size (cm)	48	42	37	31	27	22	19	15
Procedure	X-ray Protocol	Patient Type	Reference Air Kerma (mGy/image)							
Cardio Clarity	Left Coronary 15 fps Low	Default	0.022	0.027	0.030	0.034	0.039	0.046	0.053	0.063
	Rotational Scan Prop Ang0 4s	Default	0.118	0.146	0.159	0.181	0.206	0.239	0.269	0.317
		Infant	0.039	0.048	0.052	0.058	0.066	0.076	0.086	0.101
		Neonate	0.025	0.032	0.035	0.040	0.046	0.054	0.063	0.076

		Field of View	0	1	2	3	4	5	6	7
		Field Size (cm)	48	42	37	31	27	22	19	15
Procedure	X-ray Protocol	Patient Type	Reference Air Kerma (mGy/image)							
Cardio Pediatrics Clarity <40 kg	15 fps Contrast low	Default	0.012	0.015	0.016	0.018	0.021	0.024	0.027	0.032
	15 fps Contrast normal	Default	0.018	0.023	0.025	0.029	0.034	0.040	0.045	0.052
Cardio Pediatrics Clarity >40 kg	15 fps Contrast low	Default	0.022	0.027	0.030	0.034	0.039	0.046	0.053	0.063
		Neonate, Infant, Child	0.012	0.015	0.016	0.018	0.021	0.024	0.027	0.032
	15 fps Contrast normal	Default	0.047	0.058	0.064	0.073	0.083	0.097	0.110	0.130
		Neonate, Infant, Child	0.018	0.023	0.025	0.029	0.034	0.040	0.045	0.052
EP Clarity	15 fps	Default	0.022	0.027	0.030	0.034	0.039	0.046	0.053	0.063
	Prop 4s	Default	0.141	0.180	0.225	0.225	0.225	0.225	0.225	0.225
		Neonate, Infant	0.094	0.121	0.153	0.153	0.153	0.153	0.153	0.153
		Large Adult, Very Large Adult	0.141	0.180	0.225	0.225	0.225	0.225	0.225	0.225
EP Biosense Clarity	7.5 fps	Default	0.022	0.027	0.030	0.034	0.039	0.046	0.053	0.063
	3D EP Prop 4s	Default	0.141	0.180	0.225	0.225	0.225	0.225	0.225	0.225
		Neonate, Infant	0.094	0.121	0.153	0.153	0.153	0.153	0.153	0.153
		Large Adult, Very Large Adult	0.141	0.180	0.225	0.225	0.225	0.225	0.225	0.225
Head Clarity	Cerebral 2 fps low	Default	0.570	0.741	0.827	0.969	1.141	1.367	1.595	1.882
	Aortic Arch 3 fps	Default	0.815	1.059	1.181	1.385	1.629	1.956	2.280	2.689
Spine Clarity	4 fps	Default	0.672	0.875	0.975	1.142	1.345	1.614	1.883	2.221
	2 fps	Default	0.673	0.875	0.974	1.142	1.344	1.612	1.882	2.221
Thorax Clarity	Lungs 2 fps	Default	0.713	0.928	1.036	1.213	1.429	1.713	1.999	2.355
	Subclavian 3 fps	Default	0.965	1.254	1.398	1.639	1.928	2.313	2.699	3.180
Abdomen Clarity	3 fps low	Default	0.454	0.590	0.659	0.772	0.907	1.091	1.272	1.497
	Iliac / Pelvis 3 fps	Default	0.714	0.927	1.034	1.214	1.428	1.714	1.998	2.356
Peripheral Clarity	Upper Legs 3 fps	Default	0.631	0.802	0.868	0.973	1.097	1.236	1.366	1.523
	Lower Legs 1 fps	Default	1.127	1.465	1.633	1.915	2.123	2.384	2.625	2.911

Radiography (Exposure) - F20/15 with ClarityIQ Lateral Stand

		Field of View	0	1	2	3	4	5	6
		Field Size (cm)	39	37	31	27	22	19	15
Procedure	X-ray Protocol	Patient Type	Reference Air Kerma (mGy/image)						
Cardio Clarity	Left Coronary 15 fps Low	Default	0.037	0.040	0.047	0.053	0.062	0.072	0.085
	Rotational Scan Prop Ang0 4s	Default	-	-	-	-	-	-	-
		Infant	-	-	-	-	-	-	-
		Neonate	-	-	-	-	-	-	-
Cardio Pedia-trics Clarity <40 kg	15 fps Contrast low	Default	0.020	0.022	0.025	0.028	0.033	0.038	0.044
	15 fps Contrast normal	Default	0.032	0.035	0.040	0.046	0.053	0.061	0.070
Cardio Pedia-trics Clarity >40 kg	15 fps Contrast low	Default	0.037	0.040	0.047	0.053	0.062	0.072	0.085
		Neonate, Infant, Child	0.020	0.022	0.025	0.028	0.033	0.038	0.044
	15 fps Contrast normal	Default	0.075	0.081	0.094	0.105	0.122	0.142	0.166
		Neonate, Infant, Child	0.032	0.035	0.040	0.046	0.053	0.061	0.070
EP Clarity	15 fps	Default	0.037	0.040	0.047	0.053	0.062	0.072	0.085
	Prop 4s	Default	-	-	-	-	-	-	-
		Neonate, Infant	-	-	-	-	-	-	-
		Large Adult, Very Large Adult	-	-	-	-	-	-	-
EP Biosense Clarity	7.5 fps	Default	0.037	0.040	0.047	0.053	0.062	0.072	0.085
	3D EP Prop 4s	Default	-	-	-	-	-	-	-
		Neonate, Infant	-	-	-	-	-	-	-
		Large Adult, Very Large Adult	-	-	-	-	-	-	-
Head Clarity	Cerebral 2 fps low	Default	1.017	1.119	1.321	1.524	1.830	2.184	2.643
	Aortic Arch 3 fps	Default	1.451	1.597	1.886	2.175	2.611	3.120	3.771
Spine Clarity	4 fps	Default	1.157	1.272	1.504	1.737	2.084	2.490	3.007
	2 fps	Default	1.157	1.272	1.503	1.736	2.083	2.488	3.011
Thorax Clarity	Lungs 2 fps	Default	1.281	1.406	1.664	1.918	2.303	2.753	3.327
	Subclavian 3 fps	Default	1.706	1.875	2.217	2.557	3.066	3.666	4.434
Abdomen Clarity	3 fps low	Default	0.806	0.887	1.049	1.210	1.452	1.732	2.097
	Iliac / Pelvis 3 fps	Default	1.281	1.406	1.664	1.919	2.303	2.750	3.324
Peripheral Clarity	Upper Legs 3 fps	Default	1.131	1.245	1.470	1.624	1.822	2.043	2.317
	Lower Legs 1 fps	Default	1.979	2.178	2.577	2.971	3.565	4.133	4.639

Roadmap - F20/15 with ClarityIQ Frontal Stand

		Field of View	0	1	2	3	4	5	6	7
		Field Size (cm)	48	42	37	31	27	22	19	15
Procedure	Mode	Patient Type	Reference Air Kerma (mGy/image)							
Cardio Clarity	Navigate	Default	0.093	0.113	0.122	0.137	0.154	0.177	0.199	0.232
	UnSubtract	Default	0.093	0.113	0.122	0.137	0.154	0.177	0.199	0.232
Cardio Pediatrics Clarity <40 kg	Navigate	Default	0.093	0.113	0.122	0.137	0.154	0.177	0.199	0.232
	UnSubtract	Default	0.093	0.113	0.122	0.137	0.154	0.177	0.199	0.232
Cardio Pediatrics Clarity >40 kg	Navigate	Default	0.093	0.113	0.122	0.137	0.154	0.177	0.199	0.232
	UnSubtract	Default	0.093	0.113	0.122	0.137	0.154	0.177	0.199	0.232
EP Clarity	Navigate	Default	0.093	0.113	0.122	0.137	0.154	0.177	0.199	0.232
	UnSubtract	Default	0.093	0.113	0.122	0.137	0.154	0.177	0.199	0.232
EP Biosense Clarity	Navigate	Default	0.093	0.113	0.122	0.137	0.154	0.177	0.199	0.232
	UnSubtract	Default	0.093	0.113	0.122	0.137	0.154	0.177	0.199	0.232
Head Clarity	Navigate	Default	0.093	0.113	0.122	0.137	0.154	0.177	0.199	0.232
	Coil	Default	0.192	0.249	0.278	0.325	0.383	0.459	0.536	0.660
	Unsubtract	Default	0.093	0.113	0.122	0.137	0.154	0.177	0.199	0.232
Spine Clarity	Navigate	Default	0.093	0.113	0.122	0.137	0.154	0.177	0.199	0.232
	Coil	Default	0.192	0.249	0.278	0.325	0.383	0.459	0.536	0.660
	Unsubtract	Default	0.093	0.113	0.122	0.137	0.154	0.177	0.199	0.232
Thorax Clarity	UnSubtract	Default	0.093	0.113	0.122	0.137	0.154	0.177	0.199	0.232
	Navigate	Default	0.093	0.113	0.122	0.137	0.154	0.177	0.199	0.232
Abdomen Clarity	UnSubtract	Default	0.093	0.113	0.122	0.137	0.154	0.177	0.199	0.232
	Navigate	Default	0.093	0.113	0.122	0.137	0.154	0.177	0.199	0.232
Peripheral Clarity	UnSubtract	Default	0.093	0.113	0.122	0.137	0.154	0.177	0.199	0.232
	Navigate	Default	0.093	0.113	0.122	0.137	0.154	0.177	0.199	0.232

Roadmap - F20/15 with ClarityIQ Lateral Stand

		Field of View	0	1	2	3	4	5	6
		Field Size (cm)	39	37	31	27	22	19	15
Procedure	Mode	Patient Type	Reference Air Kerma (mGy/image)						
Cardio Clarity	Navigate	Default	0.170	0.182	0.205	0.227	0.260	0.296	0.340
	UnSubtract	Default	0.170	0.182	0.205	0.227	0.260	0.296	0.340
Cardio Pediatrics Clarity <40 kg	Navigate	Default	0.170	0.182	0.205	0.227	0.260	0.296	0.340
	UnSubtract	Default	0.170	0.182	0.205	0.227	0.260	0.296	0.340
Cardio Pediatrics Clarity >40 kg	Navigate	Default	0.170	0.182	0.205	0.227	0.260	0.296	0.340
	UnSubtract	Default	0.170	0.182	0.205	0.227	0.260	0.296	0.340
EP Clarity	Navigate	Default	0.170	0.182	0.205	0.227	0.260	0.296	0.340
	UnSubtract	Default	0.170	0.182	0.205	0.227	0.260	0.296	0.340
EP Biosense Clarity	Navigate	Default	0.170	0.182	0.205	0.227	0.260	0.296	0.340
	UnSubtract	Default	0.170	0.182	0.205	0.227	0.260	0.296	0.340
Head Clarity	Navigate	Default	0.170	0.182	0.205	0.227	0.260	0.296	0.340
	Coil	Default	0.341	0.374	0.443	0.511	0.614	0.733	0.872
	Unsubtract	Default	0.170	0.182	0.205	0.227	0.260	0.296	0.340

		Field of View	0	1	2	3	4	5	6
		Field Size (cm)	39	37	31	27	22	19	15
Procedure	Mode	Patient Type	Reference Air Kerma (mGy/image)						
Spine Clarity	Navigate	Default	0.170	0.182	0.205	0.227	0.260	0.296	0.340
	Coil	Default	0.341	0.374	0.443	0.511	0.614	0.733	0.872
	Unsubtract	Default	0.170	0.182	0.205	0.227	0.260	0.296	0.340
Thorax Clarity	UnSubtract	Default	0.170	0.182	0.205	0.227	0.260	0.296	0.340
	Navigate	Default	0.170	0.182	0.205	0.227	0.260	0.296	0.340
Abdomen Clarity	UnSubtract	Default	0.170	0.182	0.205	0.227	0.260	0.296	0.340
	Navigate	Default	0.170	0.182	0.205	0.227	0.260	0.296	0.340
Peripheral Clarity	UnSubtract	Default	0.170	0.182	0.205	0.227	0.260	0.296	0.340
	Navigate	Default	0.170	0.182	0.205	0.227	0.260	0.296	0.340

16.20.13 Examples of Settings with a Relatively High Air Kerma (Rate)

The following table shows examples of exposure procedures that produce a relatively high reference air kerma value, compared to other procedures, for the different Azurion systems (according to IEC 60601-2-54:2009, 203.5.2.4.5.101b 4):

System	X-ray Protocol			Field size	Patient type
C12/F12	Head	Subclavian	3 fps	15 cm	Default
C20/F20	Head	Subclavian	3 fps	15 cm	Default
C12/F12 with ClarityIQ (option)	Head	Cerebral	2 fps Normal	15 cm	Default
C20/F20 with ClarityIQ (option)	Head	Cerebral	2 fps Normal	15 cm	Default

The following table shows examples of fluoroscopy flavors that produce a relatively high Reference Air Kerma value, compared to other procedures, for the different Azurion systems (according to IEC 60601-2-54:2009, 203.5.2.4.5.101b 3):

System	X-ray Protocol	Flavor	Field size	Patient type
C12/F12	Head	High	15 cm	Default
C20/F20	Head	High	15 cm	Default
C12/F12 with ClarityIQ (option)	Head	Normal	15 cm	Default
C20/F20 with ClarityIQ (option)	Head	Normal	15 cm	Default

Measurement conditions: according to *Reference Air Kerma Measurement Setup* (page 349).

16.20.14 Reference Air Kerma Measurement Setup

Systems with FD12 Detector

Description	Setup
Anti-scatter grid	In position
Distance from focal spot to entrance surface of the phantom	• Frontal: 985 mm (38.78 inch) • Lateral: 1060 mm (41.73 inch)

Description	Setup
Distance from focal spot to Image receptor	• Frontal: 1210 mm (47.64 inch) • Lateral: 1300 mm (51.18 inch)
Distance from focal spot to patient entrance reference point	Frontal and lateral: 615 mm (24.21 inch)
Distance from focal spot to isocenter	Frontal and lateral: 765 mm (30.12 inch)
Measuring device	Unfors Xi meter or RaySafe X2 meter with sensor placed in the X-ray beam between the focal spot and the phantom, outside the system measurement field (see the figure below)
Measurement result	To determine the measured air kerma, the ratio between the distance from focal spot to patient entrance reference point and the distance from focal spot to the measurement device shall be taken into account
Patient support	Out of the primary X-ray beam
Phantom	Rectangular blocks of PMMA, total thickness 200 mm (7.87 inch), sides equal to or greater than 250 mm (9.84 inch)
Single-shot exposure	After radioscopy (stabilized kV/mA)
Wedge filter	Deselected
X-ray beam orientation	• Rotation: 90 degrees LAO • Angulation: 0 degrees CAUD

Systems with FD15 Detector

Description	Setup
Anti-scatter grid	In position
Distance from focal spot to entrance surface of the phantom	• Frontal: 960 mm (37.80 inch) • Lateral: 1075 mm (42.32 inch)
Distance from focal spot to Image receptor	• Frontal: 1195 mm (47.05 inch) • Lateral: 1300 mm (51.18 inch)
Distance from focal spot to patient entrance reference point	• Frontal: 660 mm (25.98 inch) • Lateral: 615 mm (24.21 inch)
Distance from focal spot to isocenter	• Frontal: 810 mm (31.89 inch) • Lateral: 765 mm (30.12 inch)
Measuring device	Unfors Xi meter or RaySafe X2 meter with sensor placed in the X-ray beam between the focal spot and the phantom, outside the system measurement field (see the figure below)
Measurement result	To determine the measured air kerma, the ratio between the distance from focal spot to patient entrance reference point and the distance from focal spot to the measurement device shall be taken into account
Patient support	Out of the primary X-ray beam
Phantom	Rectangular blocks of PMMA, total thickness 200 mm (7.87 inch), sides equal to or greater than 300 x 400 mm (11.81 x 15.75 inch)
Single-shot exposure	After radioscopy (stabilized kV/mA)
Wedge filter	Deselected
X-ray beam orientation	• Rotation: 90 degrees LAO • Angulation: 0 degrees CAUD

Systems with FD20 Detector

Description	Setup
Anti-scatter grid	In position

Description	Setup
Distance from focal spot to entrance surface of the phantom	945 mm (37.20 inch)
Distance from focal spot to Image receptor	1195 mm (47.05 inch)
Distance from focal spot to patient entrance reference point	660 mm (25.98 inch)
Distance from focal spot to isocenter	810 mm (31.89 inch)
Measuring device	Unfors Xi meter or RaySafe X2 meter with sensor placed in the X-ray beam between the focal spot and the phantom, outside the system measurement field (see the figure below)
Measurement result	To determine the measured air kerma, the ratio between the distance from focal spot to patient entrance reference point and the distance from focal spot to the measurement device shall be taken into account
Patient support	Out of the primary X-ray beam
Phantom	Rectangular blocks of PMMA, total thickness 200 mm (7.87 inch), sides equal to or greater than 300 x 400 mm (11.81 x 15.75 inch)
Single-shot exposure	After radioscopy (stabilized kV/mA)
Wedge filter	Deselected
X-ray beam orientation	• Rotation: 90 degrees LAO • Angulation: 0 degrees CAUD

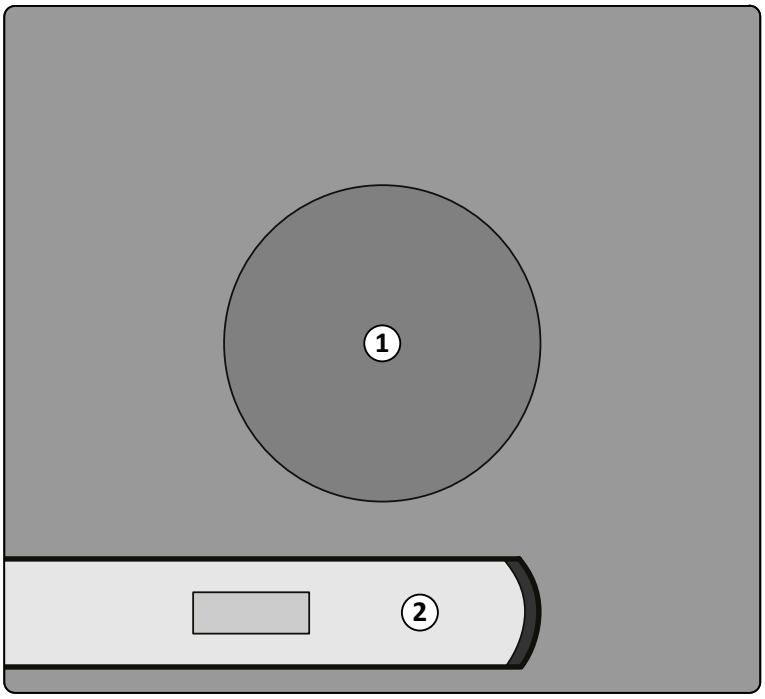

Figure 134 Location of the measuring device

Legend	
1	System measurement field
2	Measuring device

16.21 Protection Against Stray Radiation

This section describes the levels of protection provided by the system against stray radiation.

16.21.1 Zone of Occupancy

Technique factors can be obtained using the Manual X-ray Generator Test in Field Service mode.

The following technique factors are used:

- 125 kV, 10 mA
- No additional filter

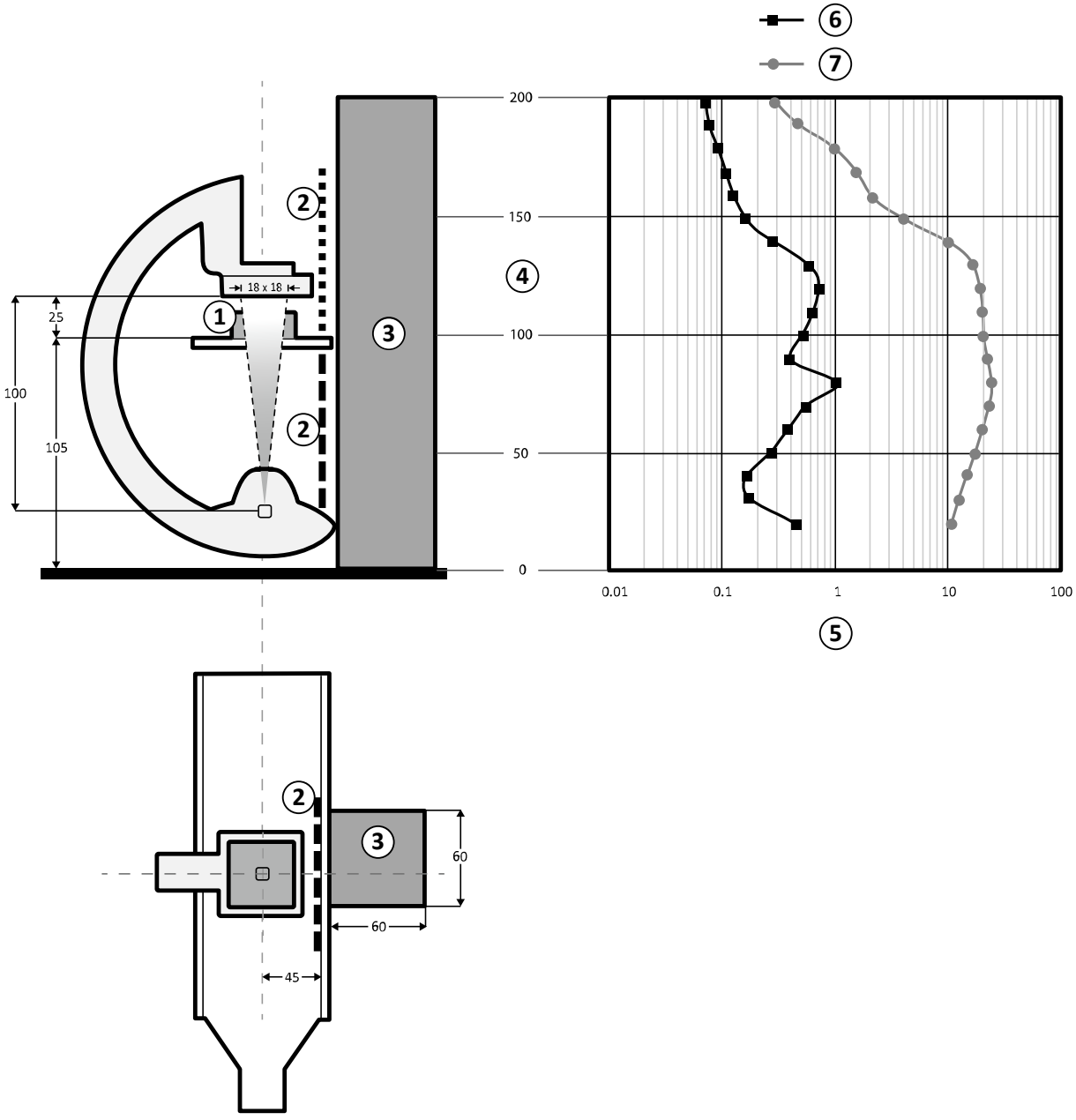

Figure 135 Technique factors graph (all dimensions are in cm)

Legend			
1	Scatter object: 25 x 25 x 15cm PMMA (IEC60601-1-3 / IEC60601-2-54)	5	Dose (mGy/hour)
2	Radiation shields	6	Dose (mGy/hour) with shield (0.5 mm Pb equivalent)
3	Significant zone of occupation (LxWxH): 60 x 60 x 200 cm (located 10 cm from the radiation shield)	7	Dose (mGy/hour) without shield
4	Height (cm)		

NOTE ***Radiation shields lower the AK by at least one order of magnitude.***

The indicated significant zone of occupancy is designated to be used for radiologic procedures according to the intended use of the equipment. For details, see *Intended Use of the System* (page 16).

16.21.2 Isokerma Maps for C12/F12 System

The following illustrations show normalized isokerma maps at 100 cm (39.37 in) and 150 cm (59.10 in) above the floor, with swivel out.

The following technique factors are used:

- Fluoroscopy 120 kV
- Source-to-image distance 100 cm
- Field size 10 x 10 cm
- No additional filter

Frontal X-ray Direction

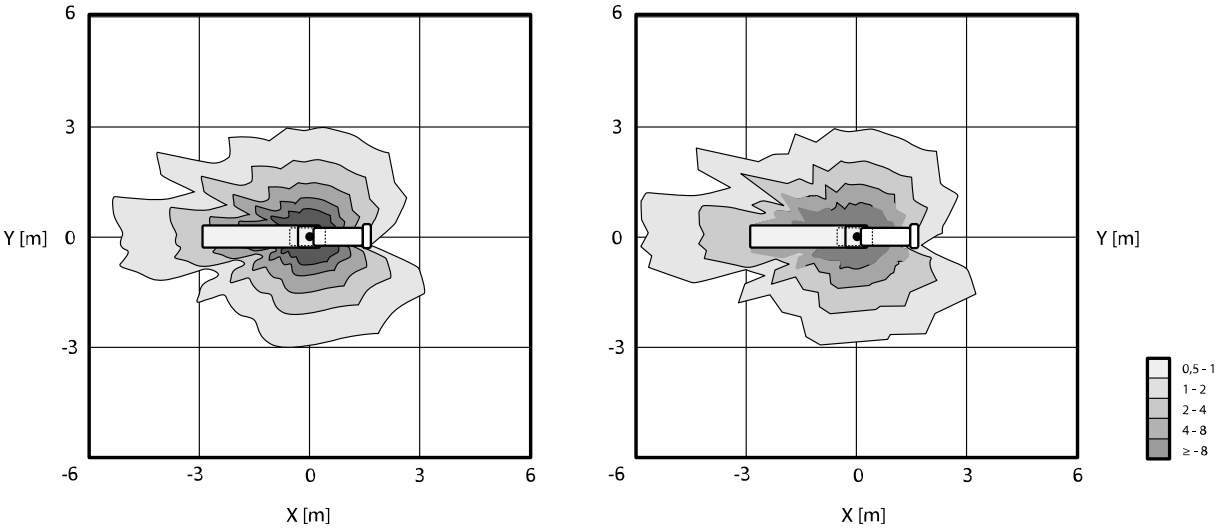

Figure 136 Isokerma map at 100 cm (left) and 150 cm (right) above the floor, µGy/(Gy x cm²)

Lateral X-ray Direction

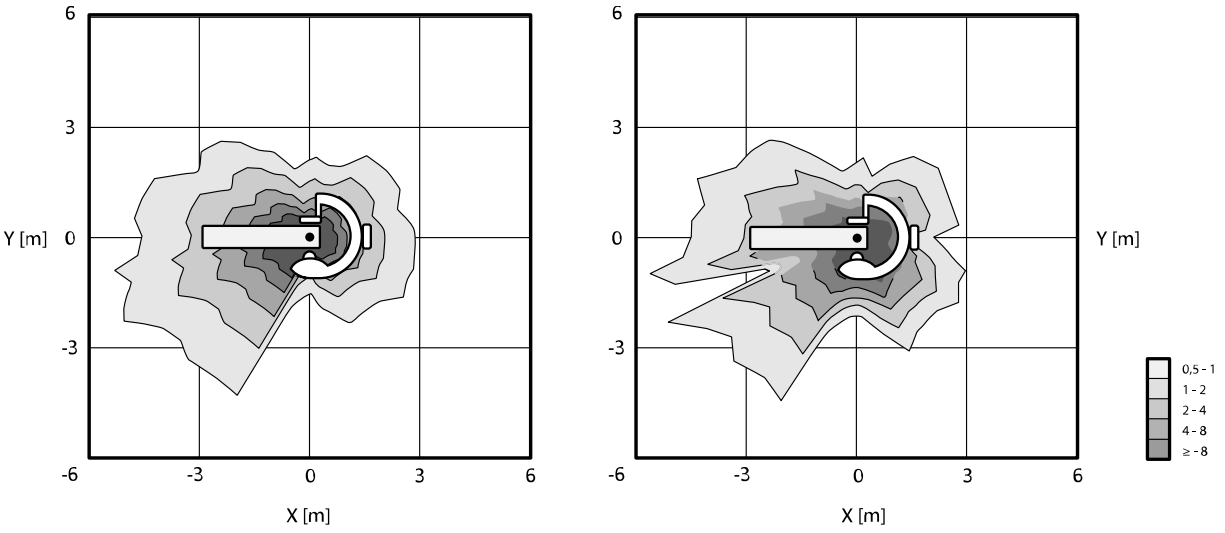

Figure 137 Isokerma map at 100 cm (left) and 150 cm (right) above the floor, µGy/(Gy x cm²)

16.21.3 Isokerma Maps for F15 System and C20/F20 System

The following illustrations show normalized isokerma maps at 100 cm (39.37 in) and 150 cm (59.10 in) above the floor, with swivel out.

The following technique factors are used:

- Fluoroscopy 120 kV
- Source-to-image distance 100 cm
- Field size 10 x 10 cm
- No additional filter

Frontal X-ray Direction

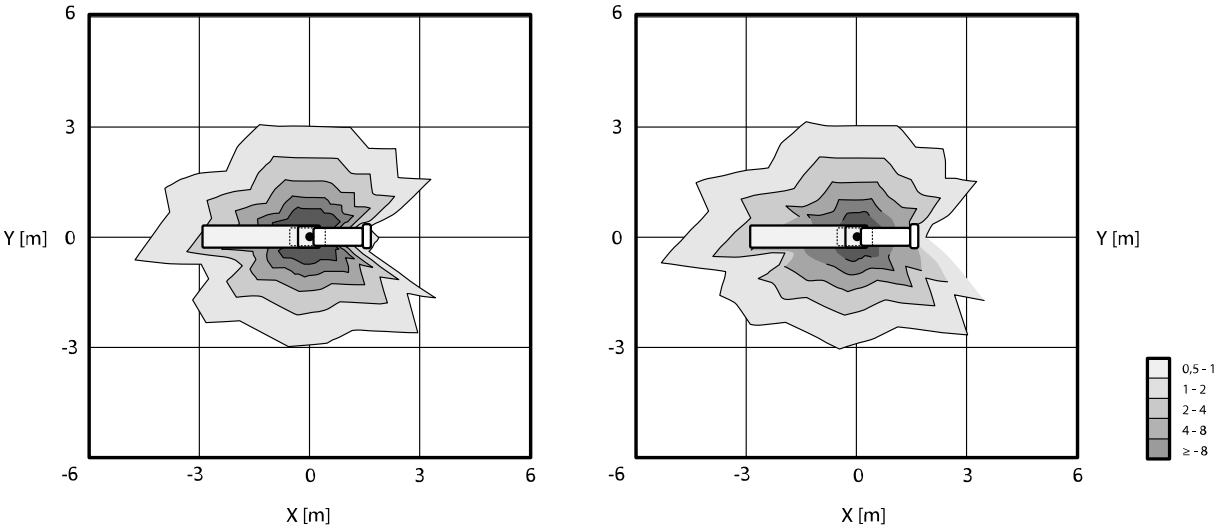

Figure 138 Isokerma map at 100 cm (left) and 150 cm (right) above the floor, µGy/(Gy x cm²)

Lateral X-ray Direction

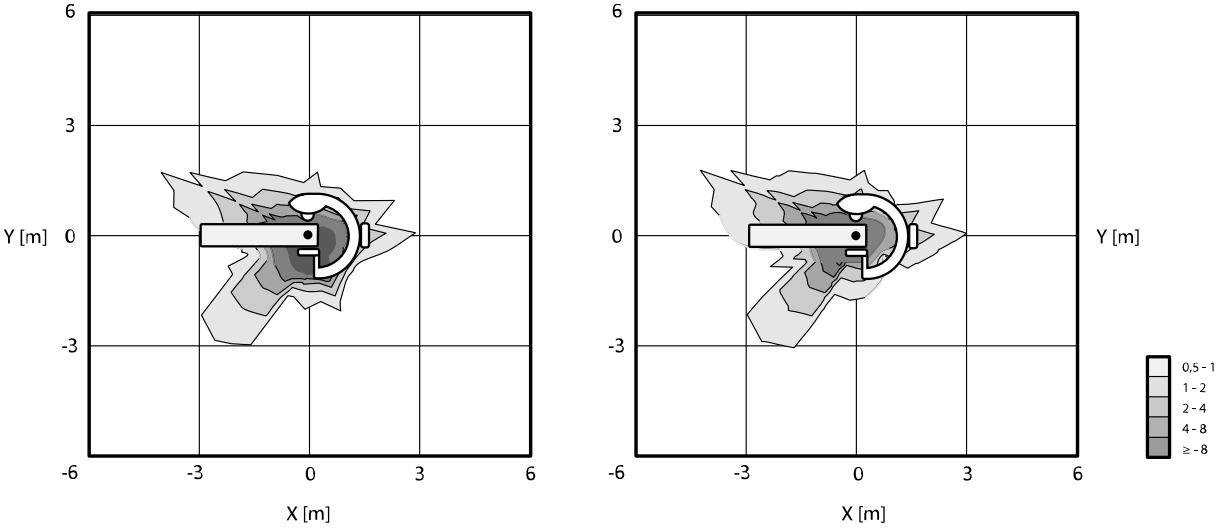

Figure 139 Isokerma map at 100 cm (left) and 150 cm (right) above the floor, µGy/(Gy x cm²)

16.21.4 Isokerma Maps for B20 System

The following illustrations show normalized isokerma maps at 100 cm (39.37 in) and 150 cm (59.10 in) above the floor, with swivel out.

The following technique factors are used:

- Fluoroscopy 120 kV
- Source-to-image distance 100 cm
- Field size 10 x 10 cm
- No additional filter

Frontal X-ray Direction

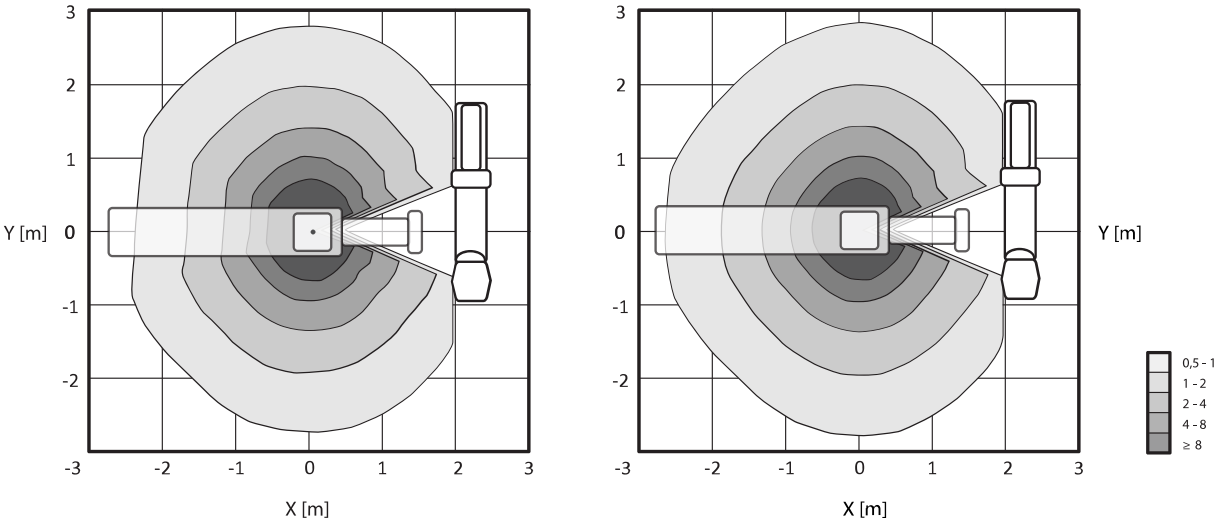

Figure 140 Isokerma map at 100 cm (left) and 150 cm (right) above the floor, µGy/(Gy x cm²)

Lateral X-ray Direction

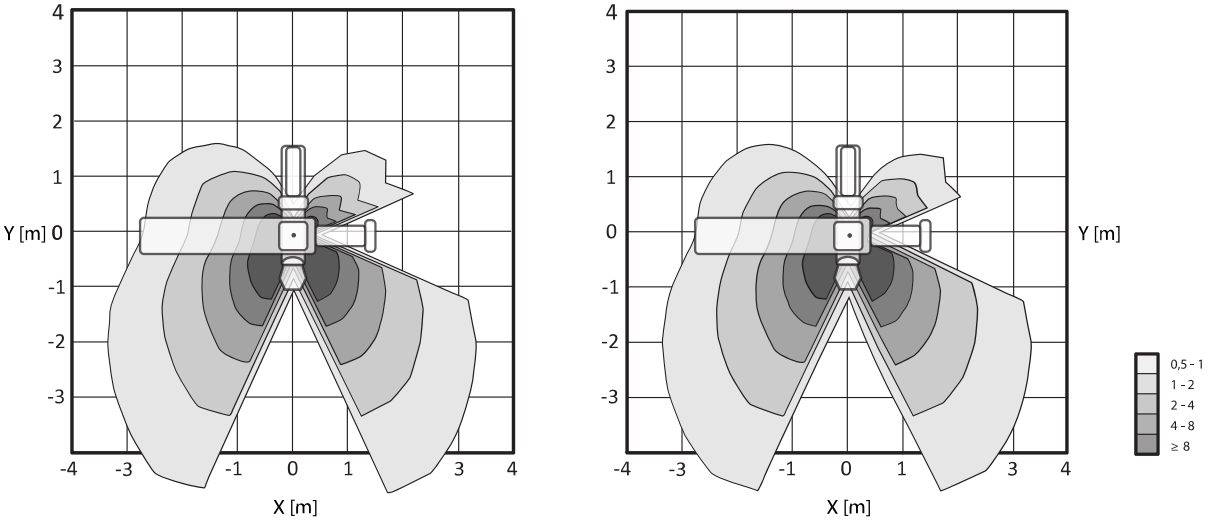

Figure 141 Isokerma map at 100 cm (left) and 150 cm (right) above the floor, µGy/(Gy x cm²)

16.21.5 Additional Filtering

This section provides information about the effect of filtration on air kerma values.

The maximum attenuation equivalent of the tabletop is 1.59 mm Al (at 75 kV/HVL 3.5 mm Al).

The minimum inherent filtration (at 75 kV/HVL 3.5 mm Al) of the X-ray tube is 2.5 mm Al.

The attenuation equivalent (at 75 kV/HVL 3.5 mm Al) of other materials in the X-ray beam are as follows:

- Collimator: 0.1 mm Al
- X-ray tube cover: 0.1 - 0.2 mm Al
- DAP-meter: < 0.5 mm Al.
- Wedge filter: 1 mm brass (CuZn37 R-019; 22 mm Al equivalent at 75 kV/HVL 3.5 mm Al)

Depending on the selected procedure, an additional filter may also be applied by the system, with the following values (for beam limiting devices with identification number 9896 010 22xxx):

Additional Filter Number	Filter	Filtration
1	0.1 mm Cu + 1.0 mm Al	4.0 mm Al (75 kV/HVL 3.5 mm Al)
2	0.4 mm Cu + 1.0 mm Al	11.0 mm Al (75 kV/HVL 3.5 mm Al)
3	0.9 mm Cu + 1.0 mm Al	21.5 mm Al (75 kV/HVL 3.5 mm Al)

The following table shows air kerma values as a percentage of the curves as a function of the additional filter selection.

		Air Kerma Value (%)			
kV	Filter	No protection	0.5 mm lead equivalence	1.0 mm lead equivalence	1.5 mm lead equivalence
110	0	100	100	100	100
	1	66	87	85	76
	2	38	69	64	53
	3	19	49	47	32
90	0	64	33	34	46
	1	39	27	24	31
	2	19	20	15	17
	3	8.5	12	9.0	9.2
70	0	35	6.0	13	22
	1	18	4.1	7.2	12
	2	7.1	2.4	3.1	4.6
	3	2.3	1.3	1.0	1.9

The following table shows normalized air kerma values as a percentage of the curves as a function of the additional filter selection.

Additional Filter	Normalized Air Kerma Value (%)
0	100
1	120
2	135
3	150

16.21.6 User Dose and Imaging Information for Cone Beam CT Reconstructions

This section provides information about cone beam CT (CBCT) reconstructions.

Low-Contrast Resolution

Non-stationarity of low-contrast resolution (image noise), was evaluated through 3D reconstructions of a Catphan 500 phantom (slice CTP515). Visual inspection of this image and similar images shows that non-stationarity of contrast resolution is negligible: at 10 and 5 Hounsfield Units (HU), discs representing features of 7 and 15 mm respectively are clearly visible.

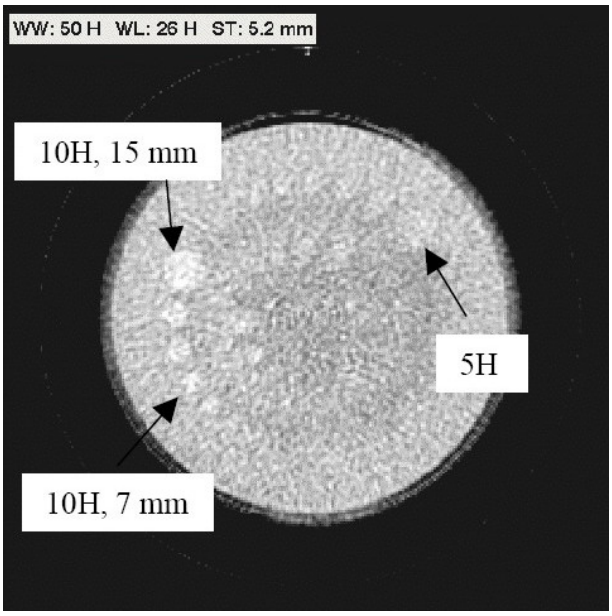

Figure 142 XperCT reconstruction of the Catphan 500 phantom, weighted CT dose ($CTDI_w$) 50 mGy, reconstruction slice thickness 5.2 mm

For more information about the phantoms used, refer to the following website:

www.phantomlab.com

Mean CT Number (XperCT)

XperCT is calibrated to produce values that are accurate for the Hounsfield scale, using several calibration methods:

- Detector gain
- Water beam hardening
- Patient scatter
- Intra-detector scatter

Truncation is corrected through parabolic extrapolation of profiles. Accuracy of mean CT numbers is limited mainly due to variations in the anti-scatter grid (relevant for neuro and abdomen), patient truncation (relevant for abdomen) and incompleteness of circular orbit (resulting in cone-beam artifacts). From clinical experience, from 2006 onwards, Philips Medical Systems has observed that the mean CT number is accurate to within approximately 20 H (neuro) and 50 H (abdomen, depending on patient size, due to truncation). For the intended use of this product, this level of accuracy is sufficient.

Uniformity

Uniformity within an axial single slice (near the plane of rotation) is dependent on the type of object scanned. Philips Medical Systems has measured uniformity using water phantoms (19 cm in diameter) where uniformity is better than 2%. This level of uniformity is also observed with XperCT Head. Uniformity with XperCT Abdomen is approximately 10%, mainly limited by scatter and truncation. Within axial slices (near plane of rotation) the uniformity is better than across axial slices. The across axial slice uniformity is influenced by the combination of object type and the incompleteness of semi-circular orbit of approximately 200 degrees, resulting in cone-beam artifacts which are clearly recognizable by the user (streaks).

Modulation Transfer Function

XperCT uses a linear reconstruction algorithm with a single reconstruction kernel. The graph below shows the measured modulation transfer function (MTF) for a typical XperCT reconstruction.

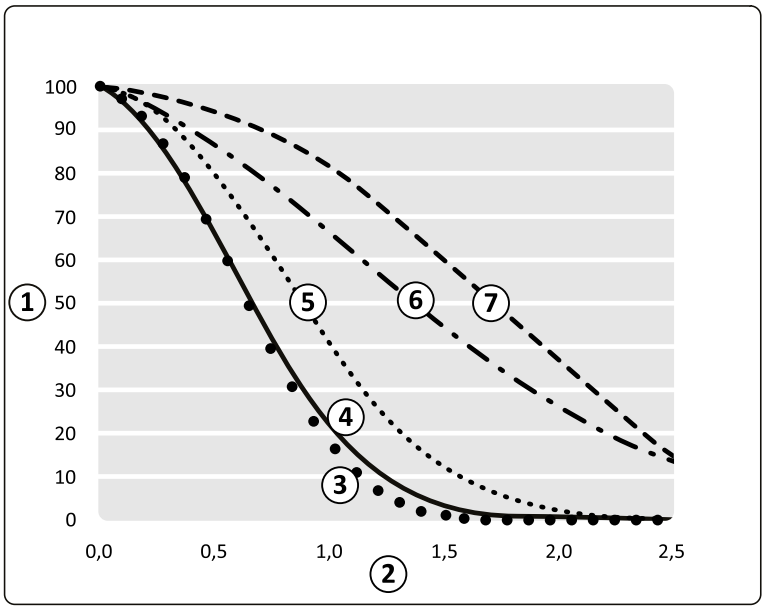

Figure 143 XperCT modulation transfer function simulation and measurement

Legend			
1	Modulation transfer function (%)	5	3D-RX processing
2	Spatial frequency in the isocenter (lp/mm)	6	Detector
3	Measured modulation transfer function	7	Focal spot blur
4	Total simulation		

Spatial Resolution and Distance Measurement

As a practical approach for measuring the MTF, the spatial resolution can be determined using a Catphan 500 phantom. Here, slice CTP528 is used to determine the spatial resolution for cone beam CT and 3D-RA reconstructions.

Using high-quality head or body procedures, a spatial resolution better than 5 line pairs per cm (representing features of 1 mm) can be achieved.

A measurement accuracy better than 5% is achieved for line pairs consisting of more than 3 line-gap transitions, which still comply to the above mentioned spatial resolution.

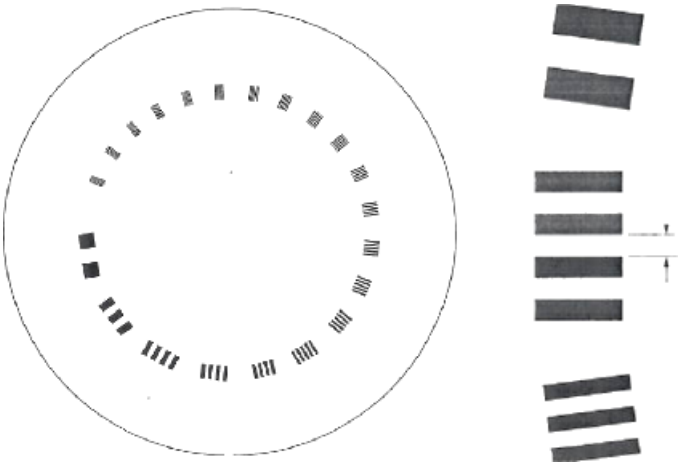

Figure 144 Schematic drawing and description of slice CTP528 of the Catphan 500 phantom (gap indicated on the right side)

Line Pair/cm	Gap Size	Line Pair/cm	Gap Size
1	0.500 cm	11	0.045 cm
2	0.250 cm	12	0.042 cm
3	0.167 cm	13	0.038 cm
4	0.125 cm	14	0.036 cm
5	0.100 cm	15	0.033 cm
6	0.083 cm	16	0.031 cm
7	0.071 cm	17	0.029 cm
8	0.063 cm	18	0.028 cm
9	0.056 cm	19	0.026 cm
10	0.050 cm	20	0.025 cm
		21	0.024 cm

Tomographic Section Thickness

Cone beam CT reconstruction yields isotropic volumes based on scans made with a square-pixels detector, therefore the MTF along the rotational axis is the same as the MTF in axial slices.

Dose Phantoms

CT dosimetry (CTDI) phantoms are used to determine the dose delivered during a cone beam CT acquisition. The phantoms consist of circular cylinders of polymethyl methacrylate (PMMA) and are 15 cm long. Their density is 1.19 ± 0.01 g/cc. The phantom for testing CT imaging of the body has a diameter of 32.0 cm, and the phantom for the head has a diameter of 16.0 cm. The phantoms provide the means for placement of the dosimeters along their axis of rotation and along a line parallel to the axis of rotation, 1.0 cm from the outer surface and within the phantom.

Dose Measurements

Actual dose values were measured with a 10 cm long, pencil-shaped ionization chamber.

CTDI Definition

The weighted CTDI dose is calculated with the formula:

CTDIW = 2/3 * (P1 + P2 + P3 + P4) / 4 + 1/3 P5 [Gy]

where P_i is the dose measured with the measurement device in position *i*.

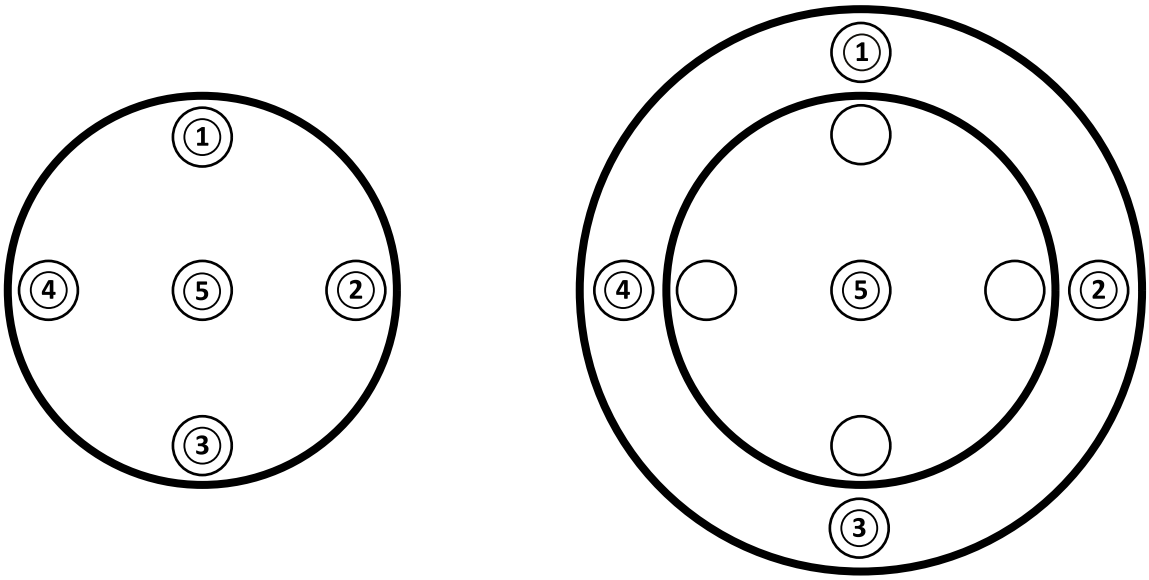

Figure 145 Dose measurement positions for head (left) and body (right) application areas

CTDI Dose Measurements

Dose measurements for some typical cone beam CT acquisition protocols are presented in the table below.

Phantom	Acquisition Protocol	CTDi (mGy)
CTDI Head	XperCT LD 30 fps -10s	22
	XperCT HQ 30 fps -21s	45
CTDI Body	Abdomen XperCT Prop LD - 5 s	14
	Abdomen XperCT Prop HQ -5 s	29
	Abdomen 3D-RA Prop scan 4 s	21
	Abdomen 3D-RA Roll scan 8 s	21

High-Contrast Resolution

3D-RA (3D rotational angiography) reconstructions provide high-speed and high-resolution 3D visualization of vessels and bones anatomy.

A high-contrast phantom is used in the evaluation of 3D-RA head and body procedures. Philips Medical Systems uses a CsI C-delta (Cesium-Iodine Contrast-difference) phantom. The CsI C-delta phantom consists of 2 cm thick, 10 cm in diameter circular cylinders of water equivalent plastic containing CsI rods representing 8 different contrast groups. The contrast groups represent: >2700, 1160, 562, 274, 116, 53, 27 and 14 HU. For each slice two different contrast groups are present each containing rods of 8 different diameters: 11.3; 8.0; 5.6; 4.0; 2.8; 2.0; 1.4; 1.0 mm. The discs are inserted in elliptical (or circular) containers of water equivalent plastic depending on procedure used (head or body).

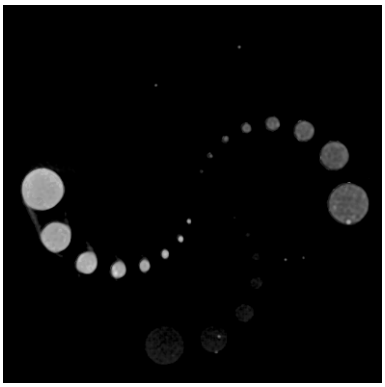

Figure 146 Projection of the CsI C-Delta phantom displaying two different contrast groups

The readout of the smallest discernable rod diameter gives the contrast resolution. The table shows representative values for typical head and body 3D-RA reconstructions. Although the same procedures are used as for CTDI dose measurements, the CTDI dose for the high-contrast resolution measurements is lower due to the smaller diameter of the CsI C-delta phantom.

Acquisition Protocol	Contrast Resolution Group [HU]	Readout for FD Format 42 cm	22 cm
Head 3D-RA Prop scan 4 s	>2700	1	1
	1160	1	1
	562	1	1
	274	1	1
	116	1-1.4	2
	53	4	C/N limit
	27	C/N limit	None
	14	None	None
Abdomen 3D-RA Prop scan 4 s	>2700	1	1
	1160	1	1
	562	1	1
	274	1	1
	116	1.4	2
	53	5.7	C/N limit
	27	C/N limit	None
	14	None	None
Abdomen 3D-RA Roll scan 8 s	>2700	1	1
	1160	1	1
	562	1	1
	274	1	1
	116	1.4	2
	53	5.7	C/N limit
	27	C/N limit	None
	14	None	None

16.22 Electromagnetic Compatibility

You should only use the system in an electromagnetic environment similar to the environment described in this section.

The Azurion medical electrical system, further referred to as the system, has been tested and complies with IEC 60601-1-2:2007 (edition 3: collateral standard - electromagnetic compatibility) and IEC60601-1-2:2014 (edition 4: collateral standard - electromagnetic disturbances) for medical electrical equipment.

Exception: DoseAware Xtend is designed as an independent option that cannot adversely affect the medical electrical systems essential performance or basic safety as a result of electromagnetic interference or disturbances. DoseAware Xtend is classified as multimedia equipment connected to the medical electrical system and complies with the Class-A CISPR 32 emission limits. DoseAware Xtend has been tested and has shown to comply with the requirements from IEC 60601-1-2:2007 (edition 3: collateral standard).

Emissions Declaration
Within the limits specified in the collateral EMC standards, the medical electrical system does not emit electromagnetic disturbances that could affect radio services, other equipment or the essential performance of other medical electrical equipment or medical electrical systems.

Immunity Declaration
Within the limits specified in the collateral EMC standards, the medical electrical system has adequate immunity to be able to provide its basic safety and essential performance in the presence of electromagnetic disturbances.

Intended Use Environment
The system has been designed for the professional healthcare environment and do not require additional shielding against electromagnetic disturbances. In addition, equipment intended to be used on or near the patient table has been designed and tested to provide its basic safety and essential performance in the presence of reasonably foreseeable disturbances caused by the use of surgical equipment.

Floors should be wood, concrete or ceramic tile. If floors are covered with synthetic material, the relative humidity should be at least 30%.

Supply mains quality should be that of a typical hospital environment, not exceeding overvoltage category III for the 3-phase supply mains to the system and not exceeding overvoltage category II for single phase hospital powered devices.

If the responsible organization requires continued operation during power mains interruptions, it is recommended that the system is powered from a compatible uninterruptable power supply. Contact a Philips representative for details.

Portable and mobile RF communications equipment should be used no closer to any part of the system enclosures, including cables, than the recommended separation distance calculated from the equation applicable to the frequency of the transmitter.

The recommended separation distance for frequencies between 150 kHz and 800 MHz can be calculated as: $d=1.2\sqrt{P}$ where P is the maximum output power rating of the transmitter in Watts (W) according to the transmitter manufacturer and d is the recommended separation distance in meters (m). For frequencies above 800 MHz the recommended separation distance can be calculated as: $d=2.4\sqrt{P}$. For the specified ISM frequencies in the 150 kHz to 80 MHz frequency range, the recommended separation distance can be calculated as: $d=0.6\sqrt{P}$.

The table below provides some concrete examples of portable and mobile RF communications equipment and the recommended separation distance.

Equipment examples	Rated effective radiated power (ERP)	Recommended separation distance
HAM radio 1.8 – 4 MHz	1,500 W	50 m
HAM radio 5.3-5.4 MHz	50 W	10 m
GSM phone 890-915 MHz	2 W	1 m
GSM base station 890-915 MHz	320 W	11 m
DCS1800 phone 1.7-1.8 GHz	4 W	5 m
DCS1800 base station 1.7-1.8 GHz	200 W	34 m
DECT phone 1.9-2 GHz	0.25 W	1.5 m
RFID 866-868 MHz	2 W	1 m
RFID 5.7-5.9 GHz (US only)	4 W	5 m
FM broadcast 88-108 MHz	100,000 W	190 m

Field strengths from fixed RF transmitters, as determined by an electromagnetic site survey, should be less than the compliance level in each frequency range. Field strengths from fixed transmitters, such as base stations for radio (cellular/cordless) telephones and land mobile radios, amateur radio, AM and FM radio broadcast and TV broadcast cannot be predicted theoretically with accuracy. To assess the electromagnetic environment due to fixed RF transmitters, an electromagnetic site survey should be considered. If the measured field strength in the location in which the system is used exceeds the applicable RF compliance level, the Azurion system should be observed to verify normal operation. If abnormal performance is observed, additional measures may be necessary, such as re-orientating or relocating part of the system components.

Interference may occur in the vicinity of equipment marked with the following symbol:



NOTE ***These guidelines may not apply in all situations. Electromagnetic propagation is affected by absorption and reflection from structures, objects and people.***

The responsible organization should ensure that the environment in which the system is used complies with the intended use environment. For further details on electromagnetic environments and environment classification refer to IEC TR 61000-2-5.

Essential Performance

The essential performance of the system (based on IEC60601-1) is: "Maintain fluoroscopy during the critical part of interventional procedures". It has been determined via EMC risk management and tests that in rare circumstances with high levels of continuous disturbances at specific frequencies, line or bar artifacts may be visible in X-ray images with a low signal-to-noise ratio.

Performance

In addition to the required immunity for basic safety and essential performance, the system has been tested against the performance levels of IEC TR 60601-4-2:2016 (Electromagnetic immunity: performance).

Electromagnetic Emissions

Electromagnetic emissions tests have been done in standby, movement and X-ray operating modes of the system. Tests are done per subsystem, subsystem test results are combined to show system level compliance with the specified limits.

The system uses RF energy only for its internal function. Therefor its RF emissions are very low and are not likely to cause any interference in nearby electronic equipment.

Overview of standards and EMC emission tests:

Description of emission test	Test standard	60601-1-2:2007 Edition 3	60601-1-2:2014 Edition 4	60601-4-2:2016 Performance
Conducted disturbance at mains port 150 kHz – 30 MHz	CISPR 11	Group I Class A limits	Group I Class A limits	Not applicable
Radiated disturbances 30 MHz – 1000 MHz	CISPR 11	Group I Class A limits	Group I Class A limits	Not applicable
Radiated disturbances 1 GHz – 6 GHz	CISPR 32	Applicable for the following enclosures: • Wireless footswitch (including base station) • Wireless mouse (including receiver dongle) • DoseAware Xtend (PDM and Hub)		
Harmonic distortion	IEC 61000-3-2	Not applicable, the system is not intended to be connected to the public mains network		
Voltage fluctuations and flicker	IEC 61000-3-3	Not applicable, the system is not intended to be connected to the public mains network		

Electromagnetic Immunity

Electromagnetic immunity tests have been done in standby, movement, and X-ray operating modes of the system. Tests are done on subsystems, operated in a representative end-use scenario using auxiliary equipment.

Overview of standards and EMC immunity tests:

Description of immunity test	Test standard	60601-1-2:2007 Edition 3	60601-1-2:2014 Edition 4	60601-4-2:2016 Performance
Electrostatic discharge (ESD)	IEC 61000-4-2	±6 kV contact ±2, 4, 8 kV air	±8 kV contact ±2, 4, 8, 15 kV air	±4 kV contact ±2, 4, 8 kV air
Radiated RF electromagnetic fields	IEC 61000-4-3	80-2500 MHz 80% AM 1 kHz 3 V/m	80-2700 MHz 80% AM 1 kHz 3 V/m	80-2700 MHz 80% AM 1 kHz 3 V/m
Proximity fields	IEC 61000-4-3	Not applicable	Frequencies and levels determined by EMC risk management. Refer to the table below.	
Electrical fast transients and bursts	IEC 61000-4-4	±1 kV (signal ports) ±2 kV (AC power ports)	±1 kV (signal ports) ±2 kV (AC power ports)	±0.5 kV 100 kHz
Surges	IEC 61000-4-5	1 kV (line-line) 2 kV (line/PE)	±0.5, 1 kV (line-line) ±0.5, 1, 2 kV (line/PE) ±4 kV (3-phase AC supply mains)	±0.5, 1 kV (line-line) ±0.5, 1 kV (line/PE)
Conducted disturbances, induced by RF fields	IEC 61000-4-6	0.15 – 80 MHz 80% AM 1kHz 3 V_{rms}	0.15 – 80 MHz 80% AM 1 kHz 3 V_{rms} 6 V_{rms} ISM freq. (refer to the table below)	0.15 – 80 MHz 80% AM 1 kHz 3 V_{rms} on system external interface ports

Description of immunity test	Test standard	60601-1-2:2007 Edition 3	60601-1-2:2014 Edition 4	60601-4-2:2016 Performance
Voltage dips, short interruptions and voltage variations on power supply input lines (3-phase supply mains port[1] and 1-phase supply mains ports not powered from the system)	IEC 61000-4-11	Voltage dips: >95%-10 ms, 60%-100 ms, 30%-500 ms, Interruptions: >95%-5 s	Voltage dips: 0% UT 0º, 45º,.. ,315º - 10 ms 0% UT 0º - 20 ms 70% UT 0º - 500 ms 0% UT 0º - 5000 ms	Voltage dips: 0% UT 0º, 180º - 10 ms 70% UT 0º - 500 ms 0% UT 0º - 5000 ms
Power frequency magnetic fields	IEC 61000-4-8	50 and 60 Hz 3 A/m	50 Hz 30 A/m	50 Hz 3 A/m

[1] The system has been tested and found to be compliant with the YY0505 and IEC60601-1-2:2004 standards. The voltage dip and variation tests of clause 36.202.7.a1 (table 210) have not been applied to the 3-phase supply mains interface of this system because this interface is exempt from these tests by clause 36.202.7.a1 for the following reasons:

- The Azurion system is not life-supporting equipment.
- The rated input current on the 3-phase supply mains interface exceeds 16 A.
- The voltage interruption test of clause 36.202.7.a2 (table 211) has been applied on the 3-phase supply mains interface and passed.

NOTE ***U_T is the AC mains voltage prior to application of the voltage dip or short interruption test.***

The following table of reasonable foreseeable ISM frequencies for conducted disturbance testing has been determined via EMC risk management.

ISM frequency table 0.15 MHz-80 MHz conducted disturbances induced by RF fields testing:

Frequency band [MHz]	Test frequencies [MHz]	Modulation	60601-1-2:2014 Edition 4	60601-4-2:2016 Performance
6.765-6.795	6.765, 6.795	80% AM, 1 kHz	6 V	3 V
12.5-20 (medical implants EN 301 330)	16	80% AM, 1 kHz	6 V	3 V
13.553-13.567	13.56	80% AM, 1 kHz	6 V	3 V
26.957-27.283	26.957, 26.03, 27.283	80% AM, 1 kHz	6 V	3 V
29-990 (porto base-stations, erp130W, d=2m)	29-80, 1% steps	80% AM, 1 kHz	10 V	3 V
40.66-40.70	40.66, 40.70	80% AM, 1 kHz	6 V	3 V

The following table of reasonable foreseeable ISM frequencies for proximity field testing has been determined via EMC risk management.

ISM frequency table 80MHz-6GHz proximity fields testing:

Frequency band [MHz]	Test frequencies [MHz]	Modulation	60601-1-2:2014 Edition 4	60601-4-2:2016 Performance
29-990 (porto base-stations, erp 130 W, d=2m)	80-990, 1% steps	80% AM, 1 kHz	10 V/m	3 V/m
380-390	385	Pulse, 18 Hz	27 V/m	6 V/m
401-406 (medical implants EN 301 839)	405	Pulse, 18 Hz	27 V/m	-
430-470	434[2], 450	Pulse, 18 Hz	28 V/m	9 V/m
704-787	710, 745, 780	Pulse, 217 Hz	9 V/m	3 V/m
800-960	810, 870, 930	Pulse, 18 Hz	33 V/m	9 V/m
1700-1990	1720, 1845, 1970	Pulse, 217 Hz	28 V/m	9 V/m

Frequency band [MHz]	Test frequencies [MHz]	Modulation	60601-1-2:2014 Edition 4	60601-4-2:2016 Performance
1900-2000	1920, 1940, 1960, 1980	Pulse, 18 Hz	10 V/m	-
2400-2570	2410, 2430, .. 2570	Pulse, 217 Hz	28 V/m	9 V/m
5100-5800	5240, 5500, 5785	Pulse, 217 Hz	9 V/m	6 V/m

[2] In Germany, Austria, Bosnia and Herzegovina, Croatia, The Former Yugoslav Republic of Macedonia, Liechtenstein, Montenegro, Portugal, Serbia, Slovenia, and Switzerland, the band 433.05-434.79 MHz (center frequency 433.92 MHz) is designated for industrial, scientific, and medical (ISM) applications.

Radio Equipment

The following radio equipment can optionally be integrated with the medical electrical system. Compliance with the immunity requirements for medical electrical equipment and compliance with emission limits from 150 kHz to 1000 MHz has been shown via inclusion of the radio equipment in the EMC subsystem tests. Compliance with the emission limits from 1000 MHz to 6000 MHz was has been shown by tests on the individual radio equipment.

Radio equipment technical data:

Radio equipment	Frequency	Power (EIRP)	Modulation
Wireless mouse	2400.0-2483.5 MHz	< 10 mW	Spectrum use: Non-specific short range device
Wireless foot switch and base station	2400.0-2483.5 MHz	< 10 mW	Spectrum use: FHSS Protocol type: Bluetooth® Type of modulation: FSK Channel spacing; 1 MHz Protocol type: Bluetooth Low Energy Type of modulation: GFSK Channel spacing; 2 MHz
DoseAware Xtend hub and personal dose meter (PDM)	(EU version) 868.3 MHz (US version) 918.3 MHz (Japan version) 927.9 MHz	< 5 mW	Spectrum use: Non-specific short range device Type of modulation: GFSK Duty cycle: < 1% Channel spacing: 100 kHz Occupied BW: 250 kHz

WARNING

The system may be subject to interference from other equipment using the same frequencies shown above, even if the other equipment complies with emission requirements for medical devices.

Declaration of Conformity for Radio Equipment

Hereby, Philips Medical Systems Nederland B.V. declares that the radio equipment type Azurion (for model numbers, see *X-ray System Configuration* (page 271)) is in compliance with Directive 2014/53/EU.

The full text of the EU declaration of conformity is available on request from the manufacturer (see *Contacting the Manufacturer* (page 388)).

For the United States and Canada, the radio conformity is based on radio module license grants:

- Wireless Footswitch (3P and 4P+2), Wireless Base Station
  FCC license grant number: XK5-SW100AMBINT or XK5 -SW24LE
  IC license grant number: 5158A-SW100AMBINT or 5158A-SW24LE
- Wireless Mouse Logitec M525
  FCC license grant number: JNZ-MR0027
  IC license grant number: 4418A-MR0027
- DoseAware Xtend Hub

FCC license grant number: XWK-8650202
IC license grant number: 9038A-8650202

- DoseAware Xtend PDM
  FCC license grant number: XWK-8601015
  IC license grant number: 9038A-8601015

Cabling Guidance

Philips provides high quality cabling with the system and has evaluated the system to be compliant with the emission and immunity requirements of the listed standards when installed in accordance with the accompanying documentation. Cables supplied with the system should be used and replaced by authorized spare parts.

Cable bundles of the system should be routed separate from foreign cables. For additional guidance on cable bundling and routing refer to IEC TR 61000-5-2.

User supplied cables may be installed to published system external interfaces provided they comply with the interface requirements in the accompanying documentation for the external interface. Cables should comply with the local regulations and public standards applicable for the interface type (shielded CAT5e or better for network RJ45 connections, USB cables should be shielded and no longer than 3 meter, DVI cables should be shielded and no longer than 3 meter). Ground loops via cable shields should be prevented by using isolating wall connect boxes. Contact your Philips representative for details.

16.23 Equipment Labels

This section provides information about the labels that are used on the system equipment. For an explanation of the symbols used on the labels, see *Symbols Used on the Equipment* (page 379).

System Label

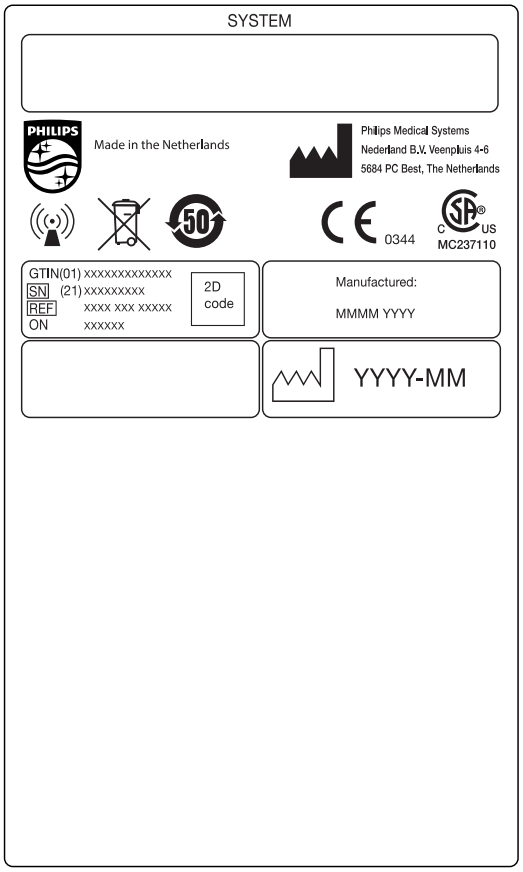

Figure 147 System label

C-arm Stand Label

Labels for the following items can be found on the back of the C-arm:

- X-ray tube assembly
- Beam limiting device (collimator)
- Image receptor (detector)

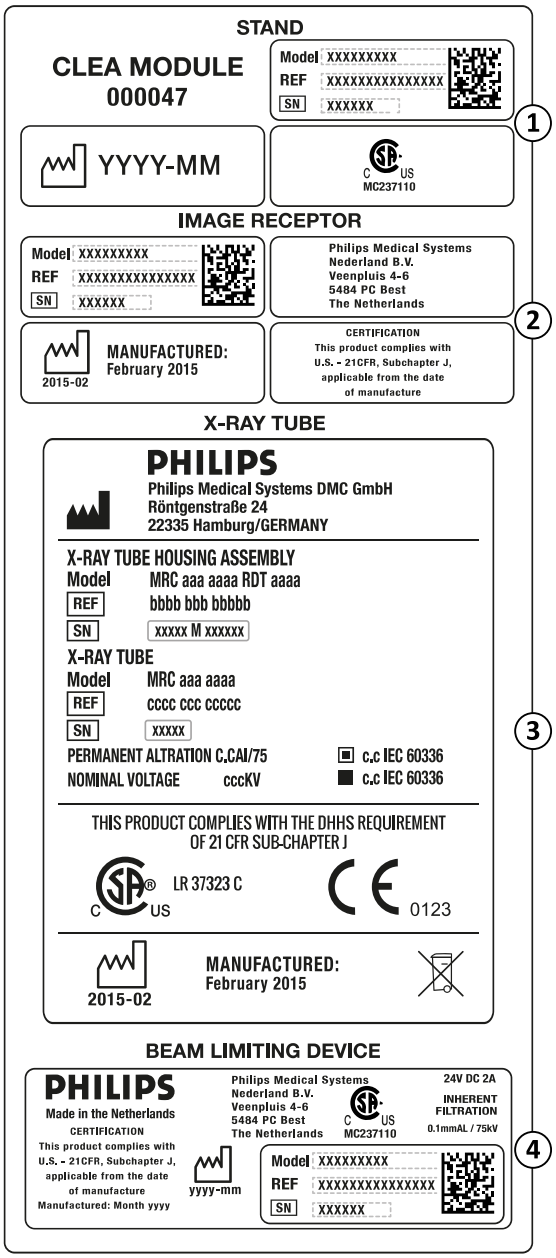

Figure 148 C-arm label

Legend			
1	Stand type, including: • Part number (12NC) • Order number (ON) • Serial number (SN) • Date of manufacture	3	X-ray tube assembly: varies according to system configuration
2	Image receptor, including: • Manufacturer • Certification label	4	Beam limiting device, including: • Part number (12NC) • Order number (ON) • Serial number (SN) • Date of manufacture • Manufacturer • Certification label

Anti-Scatter Grid Label

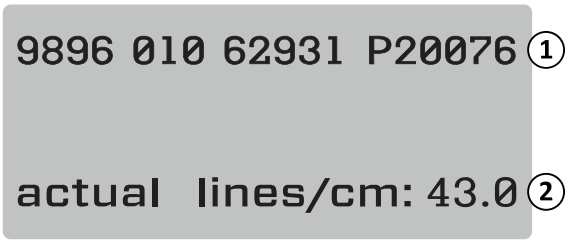

Figure 149 Anti-scatter grid label

Legend	
1	Part number (12NC) and serial number
2	Grid information: actual lines / cm: 43.0

Patient Table

The following label can be found on the connection plate at the base of the table.

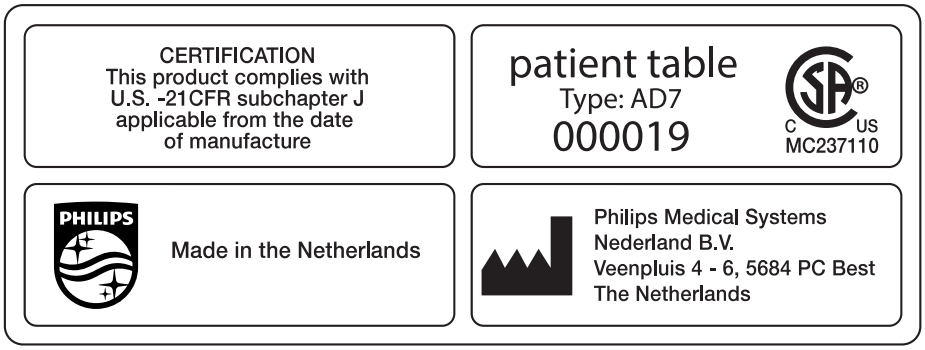

Figure 150 Patient table label

The tabletop is a type B applied part, and it carries the following label:



Figure 151 Symbol indicating type B applied part

A label on tabletop indicates the maximum permissible weight on the table including accessories and modules.



Figure 152 Patient table maximum weight label

Label text: Max. 275 kg

Table Secondary Circuit Outlet

A label for the secondary circuit outlet power socket can be found at the rear of the table base.

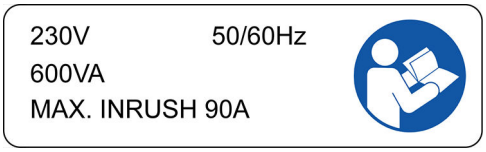

Figure 153 Secondary circuit outlet label

The label text states that the socket provides up to 600 VA at 230 V (50/60 Hz) with a maximum inrush (surge) current of 90 A.

NOTE ***Exceeding these ratings risks damage to the system.***

The following label near the secondary circuit outlet label indicates the location of a protective conductor (equipment grounding conductor).



The following label near the POAG-type potential equalization pins indicates the location of potential equalization for Physio/ECG equipment or injectors. For more information, see *Installation and Equipment Connections* (page 384).

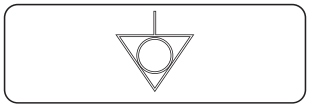

Figure 154 Potential equalization label

Table Accessory Rail

The label on the table accessory rail provides information about correct use of patient straps. For more information, see *Using Patient Straps* (page 55).



Figure 155 Patient straps label on the table accessory rail

Mattress Label

The label for the mattress provides basic information about the model number, part number, serial number, and manufacturer.



Figure 156 Mattress label

Table-Mounted Radiation Shield Label

The label for the table-mounted radiation shield provides basic information about the model number, part number, serial number, and manufacturer.

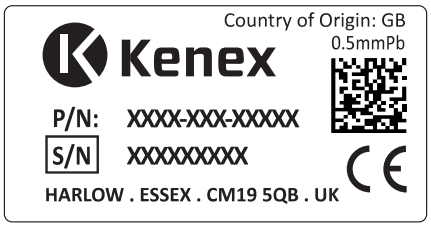

Figure 157 Table-mounted radiation shield label

Ceiling-Suspended Radiation Shield

The following label on the ceiling-suspended radiation shield warns the user about collisions with other equipment.



Figure 158 Collision warning label

A collision may cause damage to the suspension arm, and may result in injury to the patient or the operator. If a collision occurs, the suspension arm should be inspected by a qualified service technician.

Viewpad Labels

The viewpad has a laser pointing device. The intended use of the laser pointing device is to point at the images on the display monitors. Do not use this device to point at persons.



Figure 159 Viewpad laser label

Viewpad Laser Label Text
CAUTION Laser Radiation Do not stare into beam Class 2 Laser Product Laserdiode Wavelength 630-640nm Maximum output <1mW.



Figure 160 Laser warning label

Laser Warning Label Text
Laser radiation Do not stare into beam Class 2 laser product

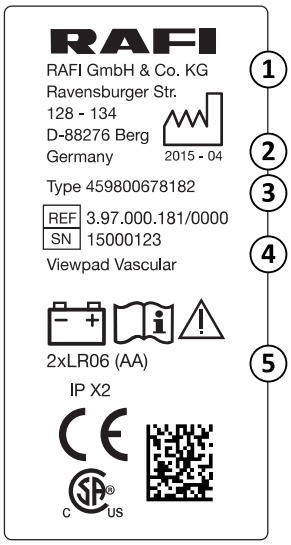

Figure 161 Viewpad product label

Legend			
1	Manufacturer	4	Serial number and viewpad type
2	Date of manufacture	5	Battery requirements
3	Part number		

The following statement on compliance applies to the viewpad:

Complies with FDA performance standards for laser products except for the deviations pursuant to laser notice 50, dated June 24, 2007.

Monoplane Wireless Foot Switch Labels

The following labels appear on the monoplane wireless foot switch. There are two models of foot switch: an earlier model referred to as type 1 and a later model referred to as type 2.

Type 1 Product Label

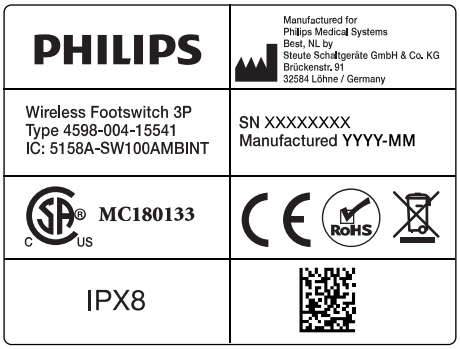

Type 2 Product Label

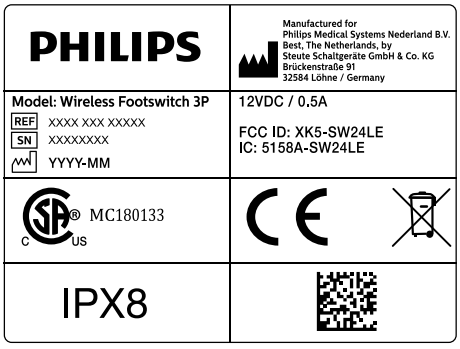

Type 1 FCC Standards Label

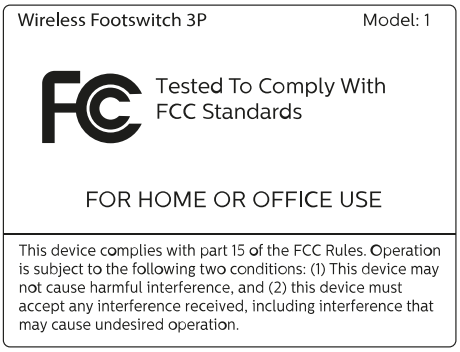

Type 2 FCC Standards Label

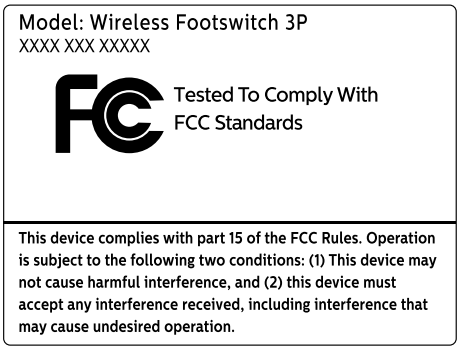

Biplane Wireless Foot Switch

The following labels appear on the biplane wireless foot switch. There are two models of foot switch: an earlier model referred to as type 1 and a later model referred to as type 2.

Type 1 Product Label

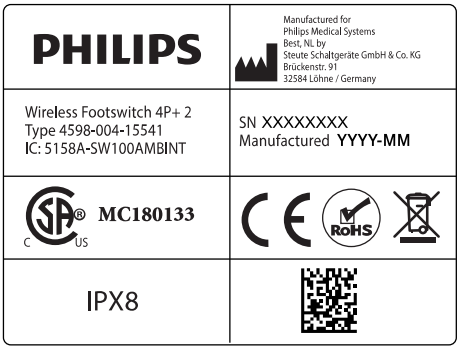

Type 2 Product Label

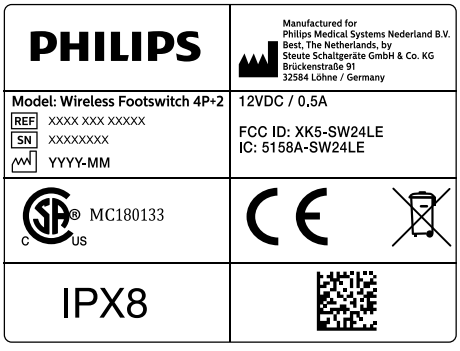

Type 1 FCC Standards Label

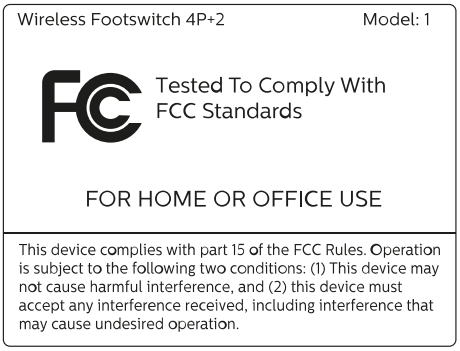

Type 2 FCC Standards Label

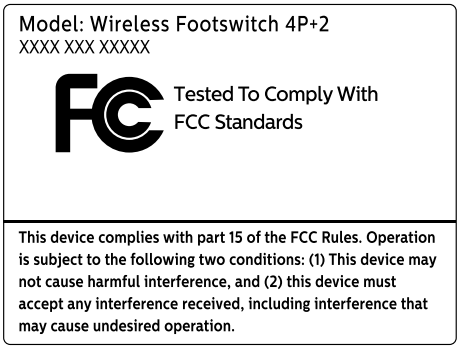

Wireless Foot Switch Charger

The following label appears on the wireless foot switch charger.

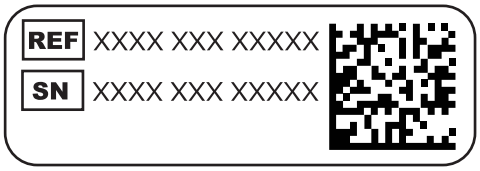

Figure 162 Product label

Wall Connection Box

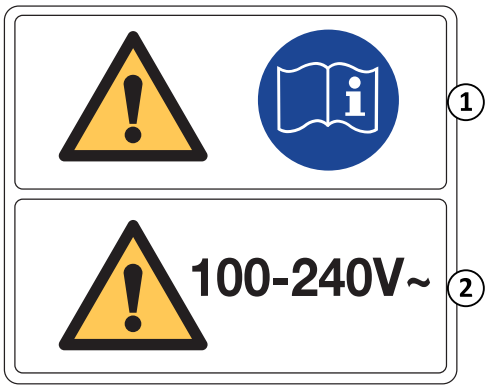

The wall connection box warning label contains the following information:

Legend	
1	Warning: read the instructions for use.
2	Warning: connect the device to a mains voltage in the range of 100 to 240 V.

For more information, see the following sections:

- *Wall Connection Box* (page 291)
- *Installation and Equipment Connections* (page 384)

Wall Connection Box WCB 2.x Tx Variant

Labels for the WCB 2.x Tx variant of the wall connection box can be found on the front and side of the box.

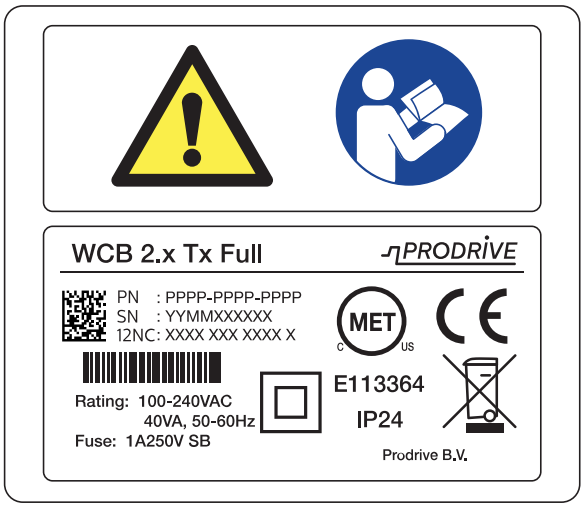

Figure 163 Wall connection box labels, 2.x Tx variant

The identification label contains the following information:

Label item	Content
Type/Model	WCB 2.x Tx Full (PRODRIVE)
PN	Part number
SN	Serial number
12NC	12 digit numeric code
Barcode	Scan identification code
—	Voltage values, current rating, operating frequency and fuse rating

For more information, see the following sections:

- *Wall Connection Box* (page 291)
- *Installation and Equipment Connections* (page 384)

Wall Connection Box WCB-x Variant

Labels for the WCB-x variant of the wall connection box can be found on the front and side of the box.

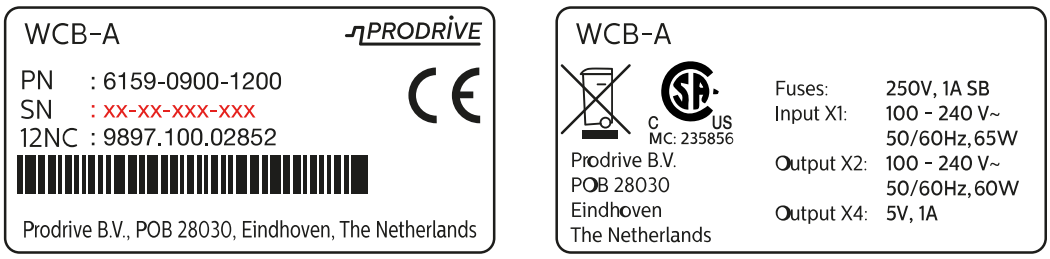

Figure 164 Identification label, WCB-x variant

The identification label contains the following information:

Label item	Left side	Right side
Type/Model	WCB-x (PRODRIVE)	Fuse rating
PN	Part number (PN)	Input X1: Voltage values and operating frequency
SN	Serial number (SN)	Output X2: Voltage values and operating frequency

Label item	Left side	Right side
12NC	12 digit numeric code	Output X4: Voltage and current values
Barcode	Scan identification code	—

For more information, see the following sections:

- *Wall Connection Box* (page 291)
- *Installation and Equipment Connections* (page 384)

Cabinets

The labels for the X-ray control can be found on the top of the M-cabinet.

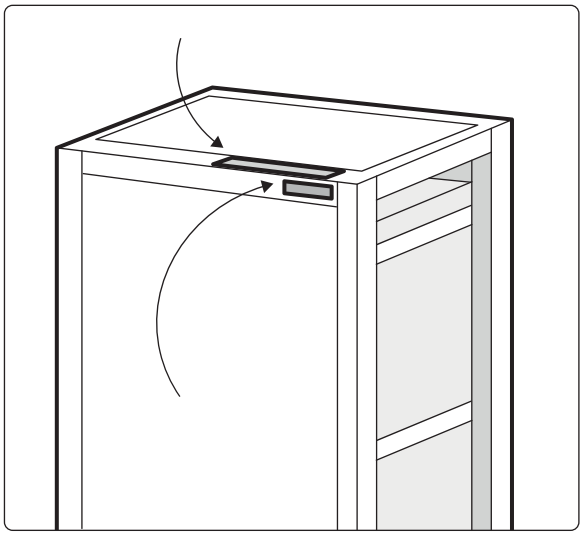

Figure 165 Position of labels on the X-ray control unit

The labels for the X-ray generator can be found on the top of the Generator cabinet.

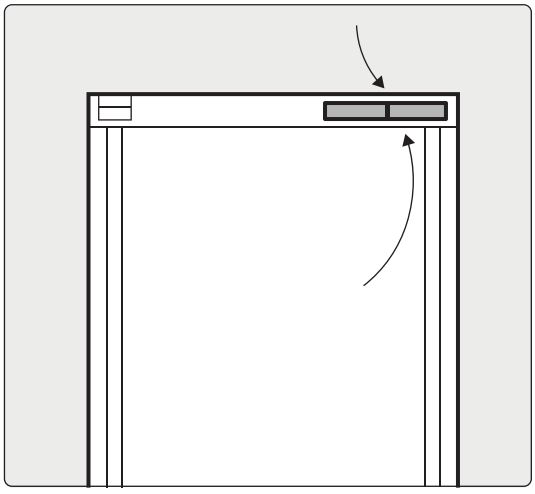

Figure 166 Position of labels on the X-ray generator

XperGuide Laser Tool Label

The label for the XperGuide laser tool provides basic information about the model number, part number, serial number and manufacturer.

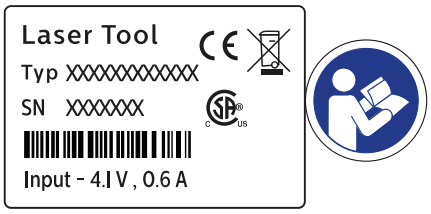

Figure 167 XperGuide laser tool label



Figure 168 Laser product label

Label text: CLASS 1 LASER PRODUCT

The following statement on compliance applies to the XperGuide laser tool:

Complies with FDA performance standards for laser products except for the deviations pursuant to laser notice 50, dated June 24, 2007.

Spring Arm Monitor Ceiling Suspension (MCS)

For more information about the following labels, refer to the Instructions for Use supplied with the spring arm MCS.



Figure 169 Spring arm warning label

Label Text
Please don't hang anything on the handle. It may detune the spring arm.

The following label on the spring arm is applicable only for service engineers when adjusting the locking screws. It warns the service engineer that the spring arm may jump up suddenly.

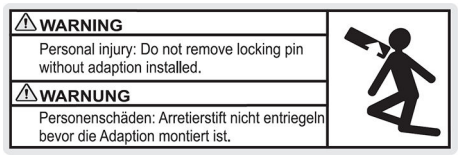

Figure 170 Locking pin warning label

Label Text
Personal injury: Do not remove locking pin without adaption installed.

Equipment Rack

The following label indicates the maximum payload for the equipment rack. The actual weight indicated on the label depends on the options installed in the equipment rack. For more information, refer to the Instructions for Use supplied with the equipment rack.

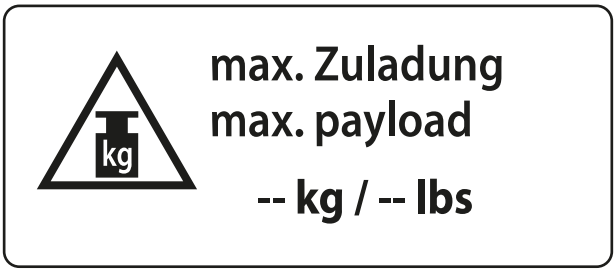

Figure 171 Equipment rack maximum payload label

16.24 Symbols Used on the Equipment

CE Label

CE 0344

This symbol indicates that the equipment complies with the European Communities regulation. The number of the notified body is indicated, if applicable.

Canadian Standards Association

C SP US

This symbol indicates that the component has been tested and certified by the Canadian Standards Association to comply with the applicable U.S. and Canadian Standards.

Product Disposal



This symbol indicates that the equipment contains materials that are harmful to the environment if disposed of incorrectly.

IPXX

IP X X

IP stands for International Protection. The IP code indicates the degree of protection of an enclosure and is regulated by IEC 60529. The first digit indicates the degree of protection for dust or solid objects, and the second digit indicates the protection against ingress of water.

For example:

- IP00 indicates that the enclosure is not protected.
- IP24 indicates that the enclosure is protected against objects larger than 12 mm (fingers), and is protected against splashing water from any direction.

Class II Equipment



This symbol indicates that the equipment meets the safety requirements specified for Class II equipment (without the use of protective earth connection).

Manufacturer

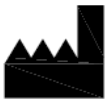

This symbol identifies the medical device manufacturer, as defined in EU Directive 93/42/EEC. The date of manufacture, as well as the name and address of the manufacturer, can be combined in one symbol.

Date of Manufacture



This symbol indicates the date when the medical device was manufactured.

Catalogue Number



This symbol indicates the manufacturer's catalogue number so that the medical device can be identified. This symbol may be shown without the enclosure.

Serial Number



This symbol indicates the manufacturer's serial number so that a specific medical device can be identified. This symbol may be shown without the enclosure.

Consult the Instructions for Use



This symbol instructs the user to consult the Instructions for Use.

eIFU



This symbol indicates that the user may press F1 to access the electronic version of the Instructions for Use.

Caution



This symbol indicates that operator awareness or operator action is required in order to avoid undesirable consequences.

Maximum Weight



This symbol indicates the maximum weight that can be applied to the patient table.

Battery



This symbol indicates the number and type of batteries used for the device.

Dangerous Voltage Warning



This symbol indicates that dangerous voltages are present in the associated component. Only trained personnel may remove the system cover, or otherwise obtain access to system components. There are no user serviceable parts and you should never attempt to repair this unit.



Intermediate Focal Spot

The value next to this symbol indicates the size of the intermediate focal spot of the X-ray tube.



Large Focal Spot

The value next to this symbol indicates the size of the large focal spot of the X-ray tube.



Radio Frequency Transmitters

This symbol indicates the presence of radio frequency transmitters.



X-Radiation

This symbol indicates that hazardous X-rays are emitted when the equipment is in operation.



Do Not Push

This symbol indicates that you should not push or lean against the equipment because it may overbalance and fall over.



Finger Safety

This symbol indicates that there is a risk of fingers becoming pinched in the location of the symbol.

17 Regulatory Information

The system complies with relevant international and national standards and laws.

17.1 Frequently Used Functions

The system provides the following frequently used functions:
- Collimator movements, i.e. shutter movements with hardware button
- Field of view adjustment
- Performing fluoroscopy, for example:
  - Selecting the fluoroscopy flavor
  - Activating fluoroscopy with the foot switch
  - Reviewing in last image hold
  - Storing fluoroscopy series and images
- Performing exposure, for example:
  - X-ray protocols
  - Activating exposure with the foot switch
  - Reviewing (image/series stepping and series cycle)
- C-arm movements
- Tabletop horizontal and transversal movements
- Changing the source-to-image distance

17.2 Applied Parts

An applied part is a part of the equipment that in normal use satisfies one of the following conditions:
- The part must come into physical contact with the patient for the equipment to perform its function.
- The part can be brought into contact with the patient.
- The part needs to be touched by the patient.

Normal use is defined as "operation, including routine inspection and adjustments by any OPERATOR, and stand-by, according to the instructions for use".

The following parts are regarded as applied parts:
- Tabletop: The applied part of the tabletop is defined as 220 cm from the edge of the head end toward the foot end. Equipment attached to the foot end is not regarded as an applied part.
- Mattress
- Arm supports
- Head-fixing aids
- Patient straps
- Ratchet compressor (band only)
- Handgrips and clamps

The following parts are applied parts supplied by a third-party manufacturer:
- Injectors (a compatibility statement is provided with each injector)
- Operating tables (a compatibility statement is provided with each table)
- Neuro head holder

The following parts are considered accessible by the patient, and are therefore treated as applied parts:
- Table accessory rail
- Additional table accessory rail
- Table-mounted radiation shield
- Rails accessory clamp

- Tabletop accessory clamp
- Table rail cable guides
- Dripstand
- Peripheral X-ray filter
- Detector cover, including the detector suspension and detector bodyguard
- Detector front plate
- Antiscatter grid and grid suspension
- X-ray tube / collimator cover
- Cerebral filter
- Control module
- Touch screen module
- Pan handle
- Mouse table

The following parts are supplied by a third-party manufacturer and are treated as applied parts:

- Biosense Carto frame

All applied parts, and parts that are treated as applied parts, that are described in this section, are type B applied parts. This is indicated by the following symbol:



Figure 172 Symbol indicating type B applied part

17.3 System Version

You can find system version details in the product information screen.

1 On the **Help** menu, click **About**.

The product information screen is displayed.

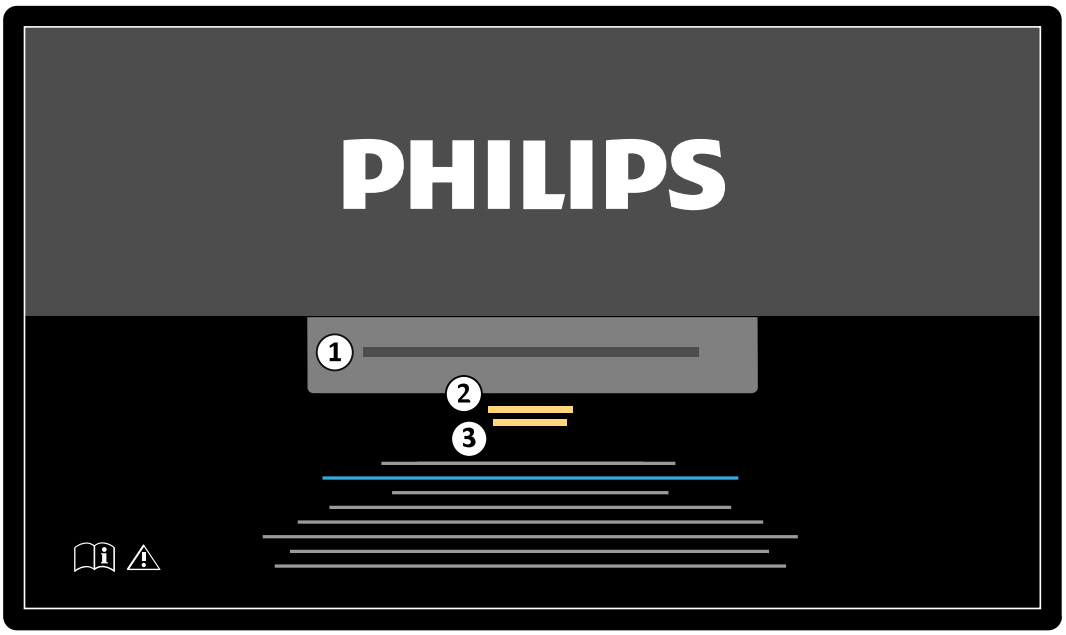

Figure 173 Product information screen

Legend	
1	Product name
2	Product release number
3	Product release date

2 To close the screen, click **Close** in the upper-right corner.

17.4 Third Party Software

This product uses other software, including open source software, for which licenses and copyright notices can be found in the following location on the installation medium:

3rd_party_sw\ReadMeLeaflet.txt

17.5 Installation and Equipment Connections

The system equipment must be installed and configured entirely by a trained service engineer as part of delivery and hand-over.

WARNING
All hospital network connections that are connected to the system must have double insulation towards the mains voltage, according IEC 60950-1.

During use of the system or due to changes in the place of installation, modifications to the equipment or configuration may be necessary. This must be carried out by a trained service engineer, or by third parties expressly authorized by Philips Medical Systems to do so.

The information contained in this chapter is mandatory under the terms of IEC 60601-1 and provides a guide for correct connection of the equipment.

The system equipment satisfies the terms of IEC 60601-1 and provides inside and outside the patient environment, the level of safety stipulated in IEC 60601-1 provided that the equipment has been installed with the electrical safety measures described.

Each of the following equipment forms part of the system.

Azurion X-ray Equipment

The X-ray equipment can consist of the following main parts that are located inside the patient environment:

- Table with control modules
- Frontal and lateral stands
  - Frontal and lateral X-ray tube housing assemblies with beam limiting devices
  - Frontal and lateral detector assemblies
- Ceiling suspended monitors
- Optional radiation shields
- Optional examination light
- Optional injector

The X-ray equipment can consist of the following main parts that are located outside the patient environment:

- Monitors
- Keyboard and mouse
- Control modules
- Workstations
- Frontal and Lateral X-ray generators and cooling units
- Cabinets for system control/mains power distribution with user interfaces and viewing monitors

Item	Specification
IEC or ISO standard	IEC / CSA / ANSI / AAMI ES 60601-1
Location of the equipment	Partly inside and partly outside the patient environment
Electrical safety measures	The electrical connections to other Medical Electrical equipment are according to IEC 60601-1. Connections have to be made by service personnel according to service instructions.

Network Workstation and Network Printer

Item	Specification
IEC or ISO standard	IEC standard
Location of the equipment	Outside the patient environment
Electrical safety measures	The network workstation or printer shall be connected via Ethernet isolator TN-X2.

Room Interfaces

Item	Specification
IEC or ISO standard	IEC / CSA / ANSI / AAMI ES 60601-1
Location of the equipment	Inside and outside the patient environment
Electrical safety measures	Only Philips Medical Systems service personnel are allowed to make connections for room interfaces. Additional cabling and connector is provided by Philips Medical Systems.

Medical DVD Recorder

Item	Specification
IEC or ISO standard	IEC standard
Location of the equipment	Outside the patient environment
Electrical safety measures	Refer to the documentation provided by the manufacturer of the equipment

Output to TV or Monitor with CVBS Input

Item	Specification
IEC or ISO standard	IEC standard
Location of the equipment	Outside the patient environment
Electrical safety measures	The equipment shall be connected to WVZ out. The TV or monitor shall be a modern certified TV or monitor with CVBS input, with a certification like CE (Low Voltage Directive 2006/95/EC) or IEC 60950-1.

Wall Connection Box

Item	Specification
IEC or ISO standard	IEC / CSA / UL 60950-1
Location of the equipment	Inside the patient environment
Electrical safety measures	Additional equipment and system are powered from the same branch circuit of hospital mains. Their PE domains are separated. Additional equipment connected using a wall connection box shall (can) be connected to WVB-X(ETH), WVB-X(USB), WVB-X(VIDEO). It is not permitted to connect IEC 60950 equipment, unless a compatibility exists. If the wall connection box is mounted inside the patient environment, the following restrictions apply: Ambient temperature shall be below 40°C / 104°F. Maximum load on 5V output (X4) shall be less than 1A. The wall connection box shall be mounted such that its location is compliant with Pollution degree 2 (connectors at lower side).

Item	Specification
IEC or ISO standard	IEC / CSA / UL 60950-1
Location of the equipment	Outside the patient environment
Electrical safety measures	Additional equipment and system are powered from the same branch circuit of hospital mains. Their PE domains are separated. Additional equipment connected using a wall connection box shall (can) be connected to WVB-X(ETH), WVB-X(USB), WVB-X(VIDEO). If the wall connection box is mounted inside the patient environment, the following restrictions apply: Ambient temperature shall be below 35°C / 95°F. Maximum load on 5V output (X4) shall be less than 1A. The wall connection box shall be mounted such that its location is compliant with Pollution degree 2 (connectors at lower side).

Item	Specification
IEC or ISO standard	IEC / CSA / UL 60601-1
Location of the equipment	Inside and outside the patient environment

Item	Specification
Electrical safety measures	Additional equipment and system are powered from the same branch circuit of hospital mains. Their PE domains are separated. Additional equipment connected using a wall connection box shall (can) be connected to WVB-X(ETH), WVB-X(USB), WVB-X(VIDEO). If the wall connection box is mounted inside the patient environment, the following restrictions apply: Ambient temperature shall be below 35°C / 95°F. Maximum load on 5V output (X4) shall be less than 1A. The wall connection box shall be mounted such that its location is compliant with Pollution degree 2 (connectors at lower side).

Surgery Wall Connection Box

Item	Specification
IEC or ISO standard	IEC / CSA / ANSI / AAMI ES 60601-1
Location of the equipment	Outside the patient environment
Electrical safety measures	The surgery wall connection box (SWCB) is used with an OR system. The connector for the pedestal injector is identical for all injectors (Burndy Metalok Bantam 28-pin connector). If this connector is used, a relay is needed within the SWCB to disconnect the mains supply if the connector is removed. The current to be disconnected can go up to 10 A. The connector for ECG or Physiology equipment is a Burndy Metalok Bantam 23-pin connector. Because the connector is not safe to touch, the high tension must be disconnected by means of a relay. The current to be disconnected can go up to 10 A. To ground equipment, a grounding cable must be used to connect the equipment to the SWCB.

Equipment Rack

Item	Specification
IEC or ISO standard	ISO11197
Location of the equipment	Inside the patient environment
Electrical safety measures	The equipment rack offers a number of additional power slots that are powered from the hospital mains directly. To assure IEC 60601 compliance within the patient environment it is required that: • Only IEC 60601-1 compliant devices are connected to these power slots. • None of these additional devices has any connection to equipment from the Azurion configuration. Disregarding these requirements violates the IEC 60601-1 compliance from the Azurion system.

Interventional Workspot

Item	Specification
IEC or ISO standard	IEC / CSA / UL 60950
Location of the equipment	Outside the patient environment
Electrical safety measures	Video output 2 of the workstation shall be connected via Wall Connection Box to the video input of a monitor in the examination room either directly or via an optional Multivision switch. Video output 1 of the workstation shall be connected to the video input of a slave monitor in the control room either directly or via an optional Multiswitch. In case of direct connection to slave monitor the mains cable of EP navigator shall be connected to a hospital mains input.

Patient Table and Rear Panel Interfaces

Item	Specification
IEC or ISO standard	IEC / CSA / ANSI / AAMI ES 60601-1
Location of the equipment	Inside the Patient environment
Electrical safety measures	ECG connector: The analogue output of compatible Physio/ECG monitoring equipment may be connected to the X1 interface on the AD7X(NT) patient table. When specified in the accompanying documentation of the Physio/ECG equipment, the functional earth plug may be connected to one of the POAG type functional ground pins on the AD7X(NT) patient table. Injector connector: Compatible contrast injector equipment may be connected to the X2 interface on the AD7X(NT) patient table. When specified in the accompanying documentation of the Physio/ECG equipment, the functional earth plug may be connected to one of the POAG type functional ground pins on the AD7X(NT) patient table. Secondary Circuit Outlet: Supply mains connection for external certified medical equipment with a supply voltage rating of 230 Vac not exceeding an input power rating of 600 VA. Connection of external equipment to this interface is only allowed if the equipment does not have other galvanic connections to supply mains grounds or building steel (such as unintended ground loops, for example, using shielded cables shall not be allowed). Foot switch (2x): Connection of foot switch.

17.6 Contacting the Manufacturer

You can contact the manufacturer by post or by email.

Manufacturer's Address	
Postal address	Philips Medical Systems Nederland B.V. Veenpluis 4-6 5684 PC Best The Netherlands
Email address	healthcare@philips.com

18 Quick Reference

This section provides an overview of functions on the system that you can use as a quick reference when you are familiar with the associated procedures.

18.1 WorkSpot

A WorkSpot consists of two monitors: the acquisition monitor and the review monitor.

The layout of the acquisition monitor and the review monitor is fixed.

In the control room, you use one keyboard and one mouse to interact with both monitors. This allows you to perform independent tasks in each screen. You can review the acquisition patient on the review monitor without interrupting the procedure on the acquisition monitor. This is called Instant Parallel Working. For more information, see *Instant Parallel Working* (page 119).

18.1.1 Acquisition Monitor

In the WorkSpot configuration, the acquisition monitor displays the acquisition window.

The acquisition window is divided into the following areas:

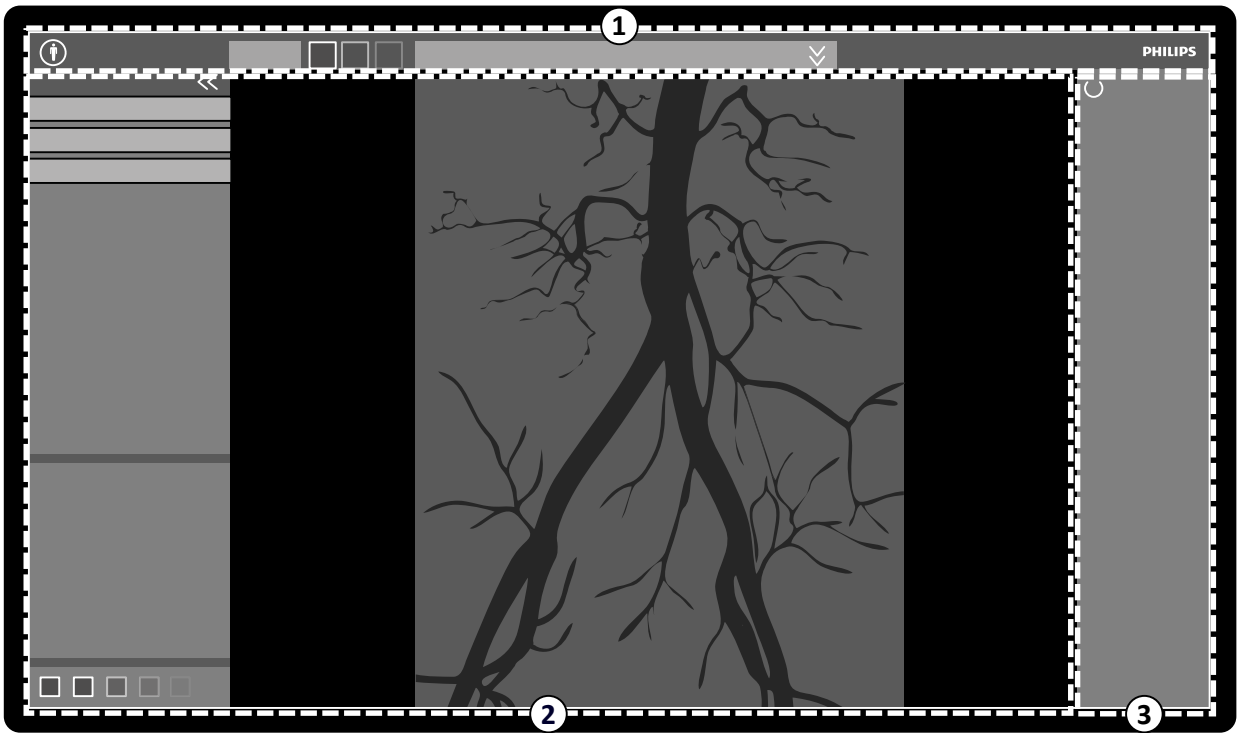

Figure 174 Acquisition window

Legend	
1	Main navigation area
2	Application area
3	Status area On biplane systems, the status area is displayed along the bottom edge of the window

Main Navigation Area

The main navigation area displays the following items:



- Patient selector: Click this button to open the patient database for patient and study administration.
- Patient information panel: This panel displays information about the acquisition patient. The expander button opens an overview panel containing details of the study, including the ProcedureCard. Warning messages related to the patient are also displayed here, for example, if the patient has allergies.
- **End Procedure** button: Click this button to open the **End Procedure** window and select how to end the procedure of the acquisition patient.

Application Area

The application area is divided into three main areas:

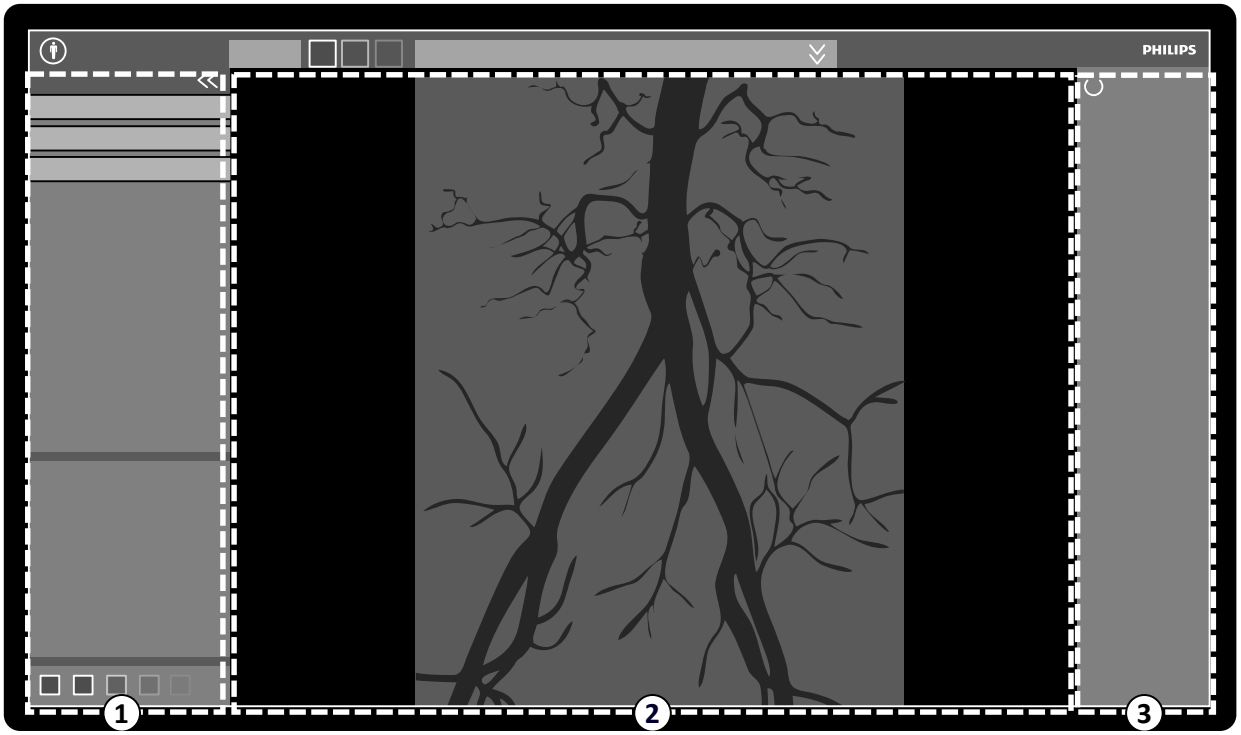

Figure 175 Application area in the acquisition window

Legend	
1	Control panel
2	Main display area On biplane systems, images from the frontal channel and the lateral channel are displayed side by side, and are synchronized.
3	Status area

- Control panel:
  - This panel provides controls and functions associated with the task that you are performing.
  - Moving to another task changes the controls and functions available in the control panel.
  - The global tools are always available regardless of the task to access activities such as archiving, printing, and image information.
- Main display area:
  - This area displays the images related to the selected X-ray live and reference views. The **Live** view is always available and displays the last acquired series or the selected series from the

acquisition patient. On biplane systems, images from the frontal channel and the lateral channel are displayed side by side, and are synchronized. **Reference** views are available when images from the acquisition patient are saved as reference images. A maximum of three views can be created. Depending on the active view, the options on the task navigation panel and the main display area change accordingly.

– The main display area contains a toolbar for manipulating the images and a control panel to change display of images and movie tools.
– The toolbar and control panel are not always in view. They are automatically hidden if not being used to create a larger viewing area. Move the pointer over the area to display them again.

Status Area

The status area displays the following items:

- Status icons
- Exposure/Fluoroscopy data
- Stand and detector Information
- Table information
- Dose data
- User guidance
- System information

For more information about the icons used in the status area, see *Status Area* (page 398).

18.1.2 Review Monitor

In the WorkSpot configuration, the review monitor displays the review window.

You can use the review window for parallel working with series from the acquisition patient or studies and series from another patient. For more information on parallel working, see *Instant Parallel Working* (page 119).

The screen layout of the review window is divided into the following areas:

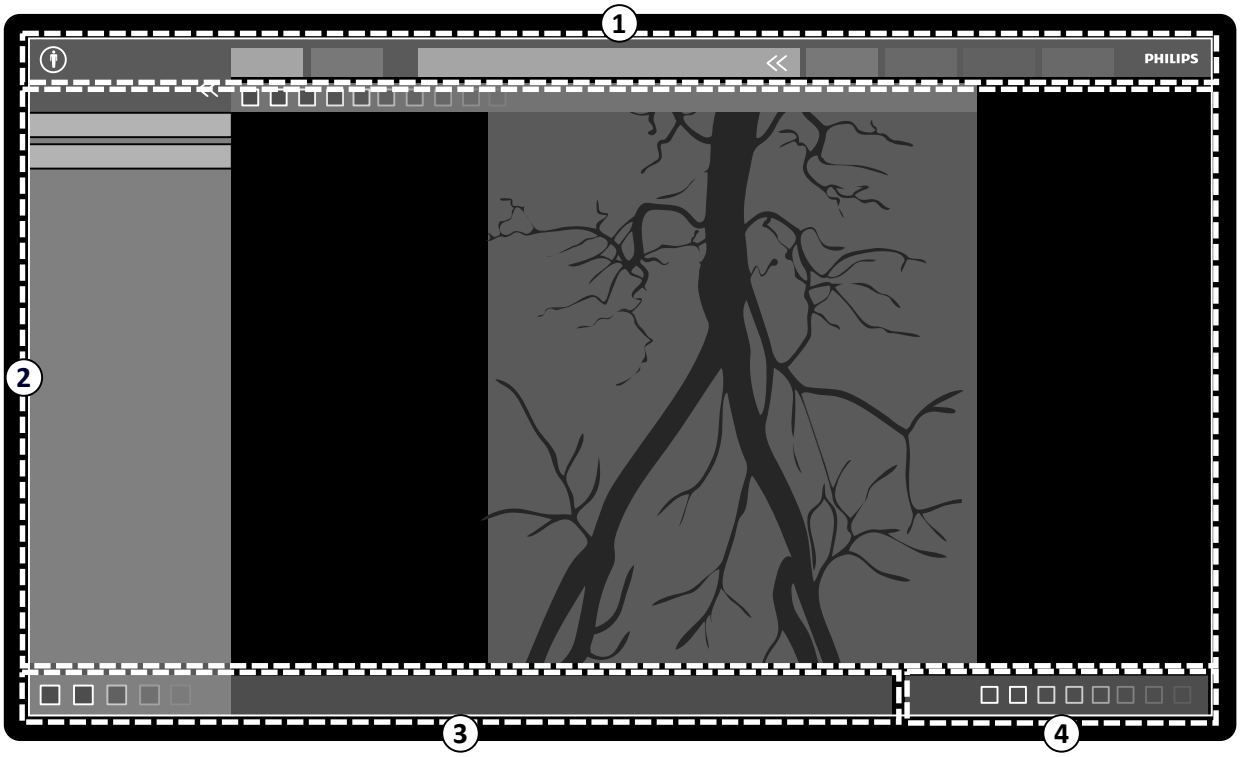

Figure 176 Review window

Legend			
1	Main navigation area	3	Application message area
2	Application area On biplane systems, images from the frontal channel and the lateral channel are displayed side by side, and are synchronized.	4	Notification area

Main Navigation Area

The main navigation area displays the following items:



Patient selector: Click this button to open the patient database for patient and study administration.

Acquisition tabs:

- **Viewer** tab: Click this tab to view the series currently being reviewed.
- **More Tools** tab: Click this tab to display a list of available tools. When a tool is selected a tab for the selected tool is added.

Patient information panel:

- This panel displays information about the acquisition patient. The expander button opens an overview panel containing details of the study, including the ProcedureCard.
- Warning messages related to the patient are also displayed here, for example, if the patient has allergies.

Close Study: Click this button to close the study.

System menu: This menu contains options for system configuration.

Help menu: This menu provides access to the following:

- Electronic Instructions for Use
- Information about the system

Application Area

The application area is divided into the following areas:

Task navigation panel: This panel allows you to move between available tasks.

NOTE ***There is no X-ray Settings task in the review window.***

Control panel:

- This panel provides controls and functions associated with the task that you are performing.
- Moving to another task changes the controls and functions available in the control panel.
- The global tools are always available regardless of the task to access activities such as archiving, printing, and image information.

Main display area:

- This area displays the images related to the selected acquisition tab.
- The main display area contains a toolbar for manipulating the images and a control panel to change display of images and movie tools.

On biplane systems, images from the frontal channel and the lateral channel are displayed side by side, and are synchronized.

NOTE ***If the patient that you are reviewing is different to the acquisition patient then a warning message is displayed.***

Application Message Area

Each application displays its own messages in this area.

Notification Area

This area provides the following additional information about the system:

- Availability of disk storage space.
- Availability of system software updates. This notification is only displayed when updates are available, or are being downloaded and installed. Click this notification to display the **Software Updates** window.
- System connection status. Click this notification to display the **System Connectivity Overview** window.
- Job viewer status. Click this notification to display the **Job Viewer** window.
- Remote assistance status. This notification is only displayed when remote assistance is enable and active. You can disable remote assistance from a shortcut menu when you right-click this notification.
- Log file status (a technical support function).
- User name of the currently logged-in user account.
- Date and time.

18.2 FlexSpot (Option)

If the FlexSpot option is installed, the monitors in the control room are replaced by up to two larger wide-screen monitors (called the primary and secondary monitors) that are capable of displaying multiple applications in multiple windows.

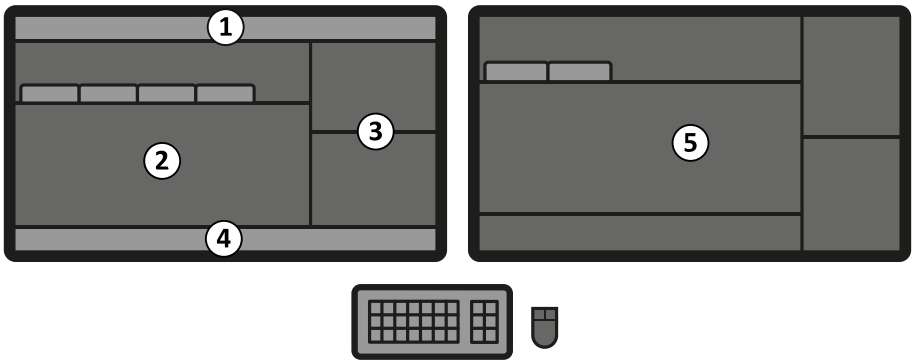

Figure 177 FlexSport primary monitor (left) and secondary monitor (right)

Legend			
1	Top bar	4	Status area
2	Live and reference images (tabs)	5	Secondary monitor
3	Application area		

The screen layout of both monitors is customizable and both monitors share a keyboard and a mouse. You can use the pointer on either monitor allowing you to perform independent tasks in each monitor.

For example, a procedure can continue in the acquisition window while you view the acquired series in the review window, or while you are reviewing another patient using the review window. This is called Instant Parallel Working. For more information, see *Instant Parallel Working* (page 119).

NOTE ***The acquisition window is always displayed, but you can choose on which monitor to display it.***

18.2.1 FlexSpot Primary Monitor

The status area is always displayed on the FlexSpot primary monitor regardless of where the acquisition window is displayed.

The primary monitor has three fixed areas that are always displayed:
- Top bar
- Application area
- Status area

Top Bar



Applications: You can drag and drop available applications on to the screen from the top bar.



Presets: Pre-defined screen layouts are displayed here and you can select screen layouts for both the primary monitor and secondary monitor.



Examination Room: You can manage the applications and presets used in the examination room, from the control room.



You can select a workstation to connect to the control room USB ports.

Keyboard lock status icons: only displayed if the additional FlexSpot option with a second keyboard is installed.

FlexSpot menu: You can access FlexSpot and FlexVision preset management, workstation power management functions and system information.

Application Area
The application area is similar to the application area of the acquisition monitor of systems without the FlexSpot option. For more information, see *Acquisition Monitor* (page 389).

System Status Area
This area contains the following items:
- Status icons
- Exposure/fluoroscopy data
- Stand and detector information
- Table information
- Dose data
- User guidance
- System information

18.2.2 FlexSpot Secondary Monitor

The FlexSpot secondary monitor does not display the system menus in the header area. To access items in the **System** menu (for example, **Customization** or **Manage ProcedureCards**), make sure that the review window is displayed somewhere on one of the two monitors.

18.2.3 Additional FlexSpot

The Additional FlexSpot is situated in the control room or examination room. It is a single-monitor WorkSpot that can be added to a FlexSpot configuration.

It provides one window displaying one application at a time. Depending on the configuration, you can change the application that is displayed in the window.

A keyboard and mouse are also provided for this monitor.

18.3 FlexVision (Option)

FlexVision is a single ultra-high-definition monitor situated in the examination room.

The FlexVision monitor has three fixed areas that are always displayed:
- Top bar
- System status area
- Live X-ray window

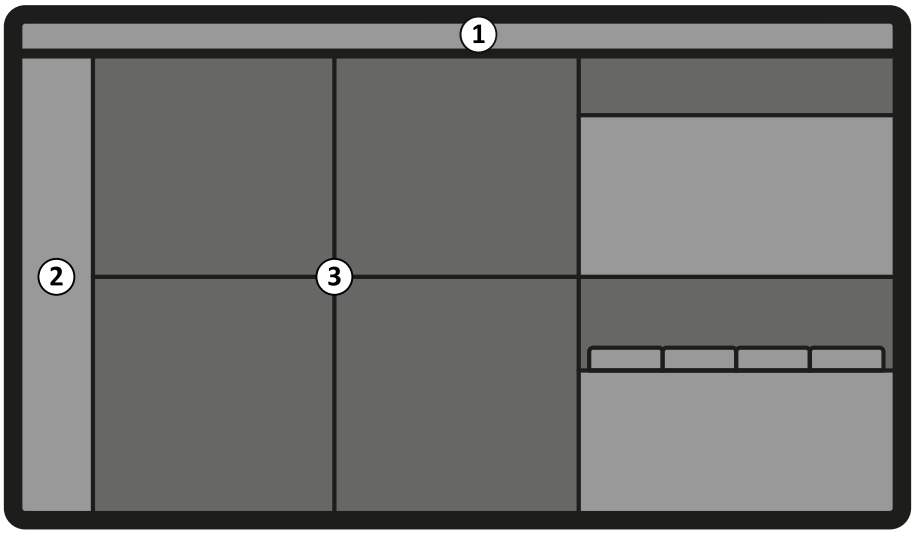

Figure 178 FlexVision monitor screen layout

Legend	
1	Top bar
2	System status area
3	Live and reference windows (the layout depend on system configuration)

Top Bar

Applications: You can drag and drop available applications on to the screen from the top bar.

Presets: Pre-defined screen layouts are displayed here and you can select screen layouts.

System Status Area

This area contains the following items:

- Status icons
- Exposure/fluoroscopy data
- Stand and detector information
- Table information
- Dose data
- User guidance
- System information

On biplane systems, the status area is divided into two columns, displaying separate status items for the frontal channel and the lateral channel as appropriate. Indicators at the top of the columns are highlighted to indicate when one or both channels are being used for acquisition. For more information, see *Status Area On FlexVision (Biplane System)* (page 406).

Live X-ray Window

This window is always in view displaying details of the acquisition patient.

On-Screen Mouse and Keyboard

When FlexVision is installed, an on-screen keyboard and mouse application may be available on the touch screen module, depending on the licenses installed on the system. Using the on-screen keyboard, you can control applications without using the optional mouse at the tableside. The mouse pointer is controlled using a touchpad on the touch screen module with two buttons for left-click and right-click actions.

The on-screen keyboard layout is determined by the language selected in the system's regional settings. For more information, see *Changing Regional Settings* (page 232).



You can activate the on-screen keyboard and mouse application using the application selector.

18.4 Touch Screen Module

You use the touch screen module to control acquisition settings, applications, monitor layouts and presets, and to process acquisition images for review and post-processing in the acquisition window.

The buttons that are available on the module depend on the active procedure or system configuration.

When FlexVision is installed, the touch screen module also provides an on-screen mouse and keyboard. For more information, see *FlexVision (Option)* (page 395).

The touch screen module has the following areas:

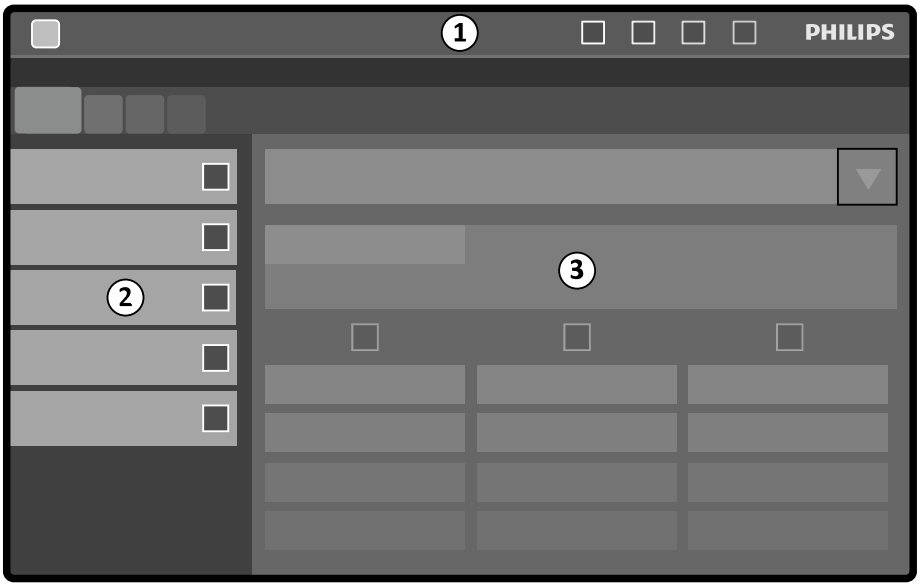

Figure 179 Touch screen module

Legend	
1	Top bar
2	Task panel
3	Application window

Top Bar

The top bar is the menu bar at the top of the screen. It is always visible and provides you with access to the following functions:

- Applications
- Fluoroscopy store
- Fluoroscopy time buzzer (only displayed when the buzzer is active)
- Full system lock
- X-ray enable/disable

Task Panel

This panel displays available tasks.

Application Window
Display area: The selected step determines the available touch screen buttons.

18.4.1 Touch Screen Gestures

You can use touch gestures on the touch screen module.

Gesture	Action		Effect
Tap		Tap the screen on a function	Activates the function
		Tap the mini viewport (biplane systems only)	Swaps the contents of the mini viewport and the main viewport
Drag	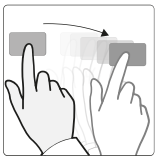	Touch an item or region in the window and move across the screen	Drags an item on the screen, or pans the image
Press	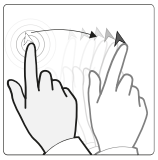	Press and hold	Displays the pointer. You can then drag the pointer to an item or region of interest. The pointer is hidden when you remove your finger from the screen
Slide	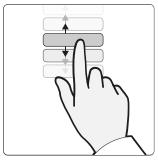	Touch a list item and move up or down	Scrolls the list
Stretch	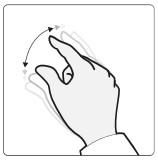	Place two fingers close together on the screen and move them apart	Zoom in at this position
Pinch		Place two fingers a distance apart on the screen and move them towards each other	Zoom out from this position
Double tap		Tap the screen twice	• If the image is not already zoomed, a double tap zooms the image to twice the default magnification • If the image is already zoomed, a double tap resets the zoom and pan settings

18.5 Status Area

The status area displays information about the status of the X-ray system, including settings in use and messages.

18.5.1 Status Area - Monoplane System

On a monoplane system, the status area is visible on the acquisition window in the control room and in the live X-ray window in the examination room.

Status Area in the Control Room (Monoplane System)

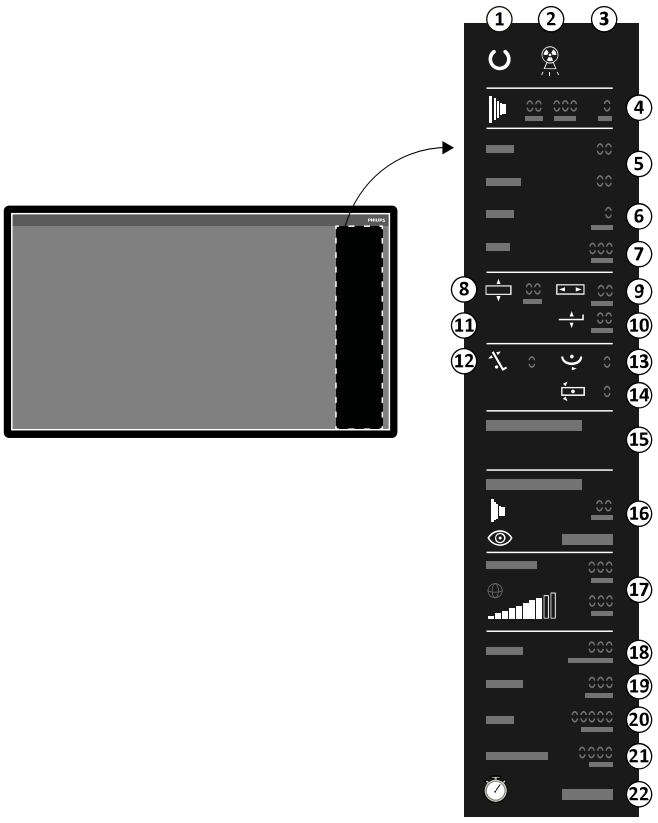

Figure 180 Status area in the control room acquisition window

Legend			Description
1		System status	The system is ready for exposure.
		System status	The system is not ready for exposure.
2		X-ray status	X-ray is on.
		X-ray status	X-ray is disabled.
3		Tube load	The tube is overheated.
4		Fluoroscopy	Fluoroscopy settings are displayed.
		Exposure	Exposure settings are displayed.
	-	kV	X-ray generator settings
	-	mA	
	-	ms	

Legend			Description
5	-	LAO	C-arm rotation angle.
	-	CRAN	C-arm angulation angle.
6	-	SID	The actual or target source-to-image distance.
7	-	FD	The selected detector size.
8		Table lateral isocenter offset [1]	The lateral offset of the table from the isocenter position.
9		Table longitudinal iso-center offset [1]	The longitudinal offset of the table from the isocenter position.
10		Table height isocenter offset [1]	The height offset of the table from the isocenter position.
11		Isocenter [1]	The table is in the isocenter position.
12		Table tilt [1]	The table tilt angle.
13		Table cradle [1]	The table cradle angle.
14		Table pivot [1]	The table pivot angle.
15	-	System information	System information, warnings, and error messages.
16	-	X-ray protocol	The selected procedure settings.
17	-	Dose model	For more information, see *Dose Model* (page 428).
18	-	Air kerma in skin area rate [2]	Displays the air kerma rate (mGy/min).
19	-	Cumulative air kerma	Displays the cumulative air kerma (mGy).
20	-	Dose area product	Displays the cumulative dose area product (Gy cm^2).
21	-	Total fluoroscopy time	Displays the total fluoroscopy time.
22		System time / stop-watch	Displays the system time. If the stopwatch is active, the stopwatch time is displayed.

[1] If a collision is detected, this section in the status area displays collision detection warnings and icons.

[2] Only displayed if the thorax region is selected.

Status Area in the Examination Room (Monoplane System)

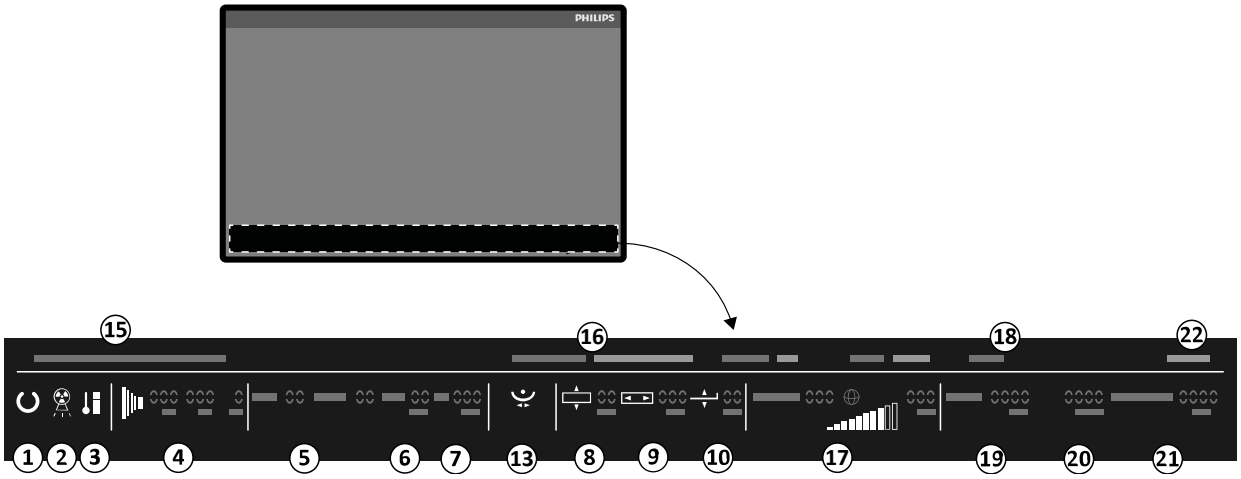

Figure 181 Status area in the examination room live X-ray window

Legend			Description
1		System status	The system is ready for exposure.
		System status	The system is not ready for exposure.
2		X-ray status	X-ray is on.
		X-ray status	X-ray is disabled.
3		Tube load	The tube is overheated.
4		Fluoroscopy	Fluoroscopy settings are displayed.
		Exposure	Exposure settings are displayed.
	-	kV	X-ray generator settings
	-	mA	
	-	ms	
5	-	LAO	C-arm rotation angle.
	-	CRAN	C-arm angulation angle.
6	-	SID	The actual or target source-to-image distance.
7	-	FD	The selected detector size.
8		Table lateral isocenter offset [1]	The lateral offset of the table from the isocenter position.
9		Table longitudinal isocenter offset [1]	The longitudinal offset of the table from the isocenter position.
10		Table height isocenter offset [1]	The height offset of the table from the isocenter position.
11		Isocenter [1]	The table is in the isocenter position.

Legend			Description
12		Table tilt [1]	The table tilt angle.
13		Table cradle [1]	The table cradle angle.
14		Table pivot [1]	The table pivot angle.
15	-	System information	System information, warnings, and error messages.
16	-	X-ray protocol	The selected procedure settings.
17	-	Dose model	For more information, see *Dose Model* (page 428).
18	-	Air kerma in skin area rate [2]	Displays the air kerma rate (mGy/min).
19	-	Cumulative air kerma	Displays the cumulative air kerma (mGy).
20	-	Dose area product	Displays the cumulative dose area product (Gy cm^2).
21	-	Total fluoroscopy time	Displays the total fluoroscopy time.
22		System time / stop-watch	Displays the system time. If the stopwatch is active, the stopwatch time is displayed.

[1] If a collision is detected, this section in the status area displays collision detection warnings and icons.

[2] Only displayed if the thorax region is selected.

18.5.2 Status Area - Biplane System

On a biplane system, the status area is visible on the acquisition window in the control room. In the examination room, the status bar is split across the live X-ray window and reference window.

Status Area in the Control Room (Biplane System)

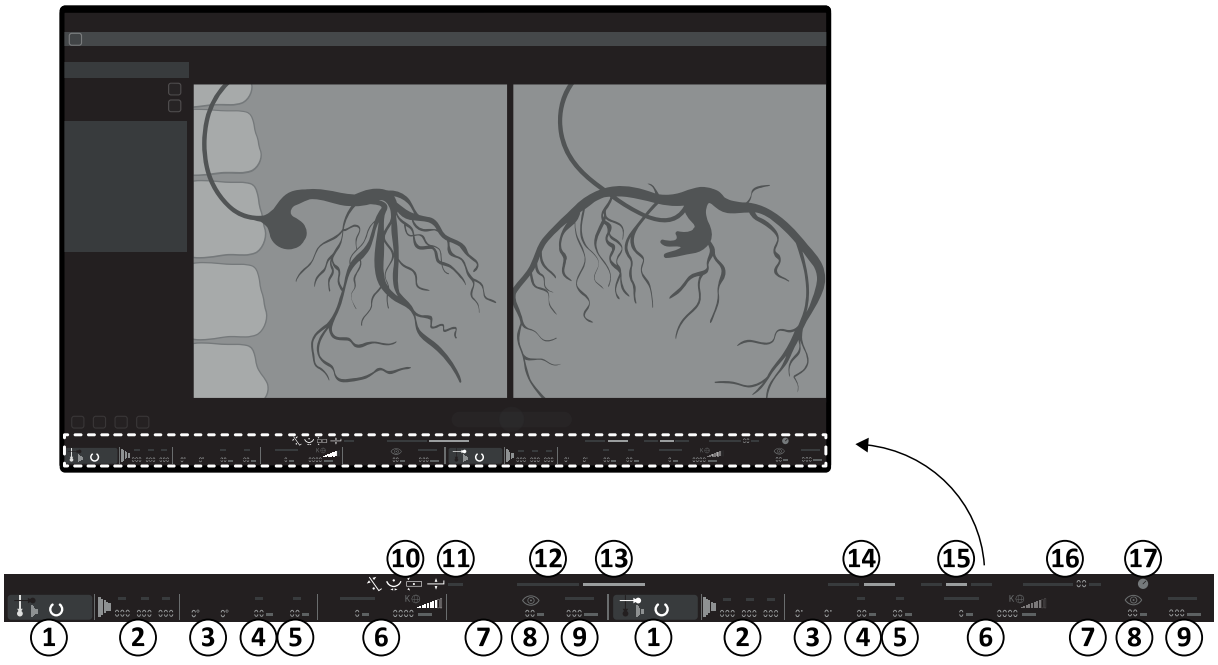

Figure 182 Status area in the control room acquisition window

Legend			Description
1		Channel indicator	Frontal channel
		Channel indicator	Lateral channel
		System status	The channel is ready for exposure (when a channel is selected for exposure, this section of the status area is highlighted)
		System status	The channel is not ready for exposure
		X-ray status	X-ray is on
		X-ray status	X-ray is disabled
		Tube load	The tube is overheated
2		Fluoroscopy	Fluoroscopy settings are displayed
		Exposure	Exposure settings are displayed
	-	kV	X-ray generator settings
	-	mA	
	-	ms	
3	-	LAO	C-arm rotation angle
	-	CRAN	C-arm angulation angle
4	-	SID	The actual or target source-to-image distance
5	-	FD	The selected detector size
6	-	Dose model	For more information, see *Dose Model* (page 428)
7	-	mGy/min	Air kerma rate
8	-	min	Fluoro time (for the channel)
9	-	mGy	Cumulative air kerma
10		Table tilt [1]	The table tilt angle
		Table cradle [1]	The table cradle angle
		Table pivot [1]	The table pivot angle
11		Table lateral isocenter offset [1]	The lateral offset of the table from the isocenter position
		Table longitudinal isocenter offset [1]	The longitudinal offset of the table from the isocenter position
		Table height isocenter offset [1]	The height offset of the table from the isocenter position
		Isocenter [1]	The table is in the isocenter position
12	-	X-ray protocol	The selected procedure settings

Legend			Description
13	-	fps	Exposure speed (selected/actual)
14	-	Fluoroscopy flavor	The currently selected fluoroscopy flavor
15	-	Dose area product	Displays the cumulative dose area product (Gy cm^2)
16	-	Total fluoroscopy time	Displays the total fluoroscopy time
17		System time / stop-watch	Displays the system time. If the stopwatch is active, the stopwatch time is displayed

[1] If a collision is detected, this section in the status area displays collision detection warnings and icons.

[2] Only displayed if the thorax region is selected.

Status Area in the Examination Room (Biplane System)

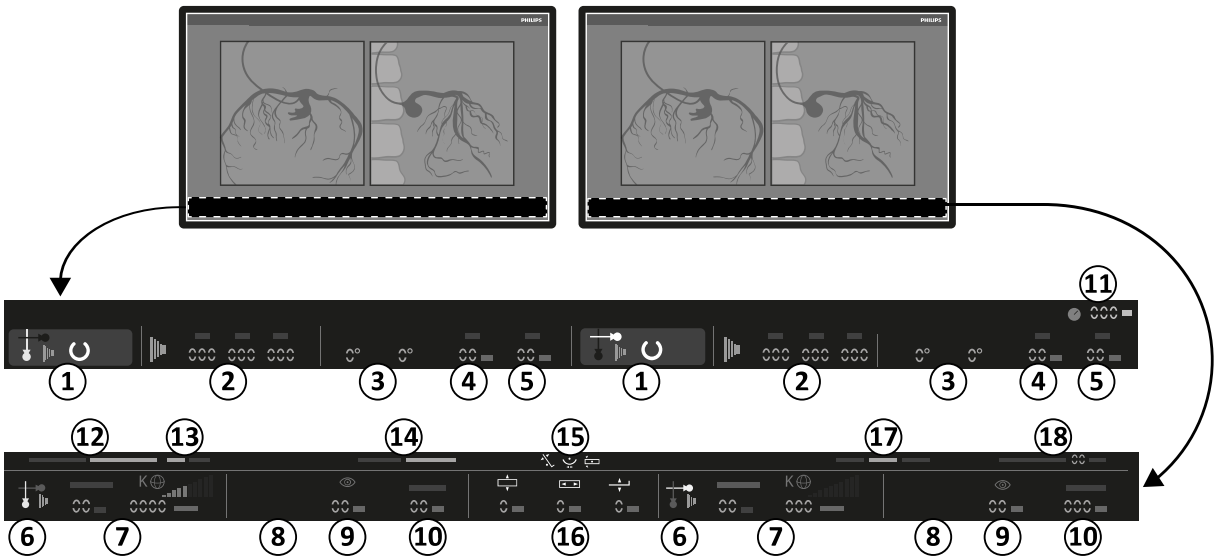

Figure 183 Status area in the examination room live X-ray window and reference window

Legend			Description
1		Channel indicator	Frontal channel
		Channel indicator	Lateral channel
		System status	The system is ready for exposure (when a channel is selected for exposure, this section of the status area is highlighted)
		System status	The system is not ready for exposure
		X-ray status	X-ray is on
		X-ray status	X-ray is disabled
		Tube load	The tube is overheated

Legend			Description
2		Fluoroscopy	Fluoroscopy settings are displayed
		Exposure	Exposure settings are displayed
	-	kV	X-ray generator settings
	-	mA	
	-	ms	
3	-	LAO	C-arm rotation angle
	-	CRAN	C-arm angulation angle
4	-	SID	The actual or target source-to-image distance
5	-	FD	The selected detector size
6		Channel indicator	Frontal channel
		Channel indicator	Lateral channel
7	-	Dose model	For more information, see *Dose Model* (page 428)
8	-	mGy/min	Air kerma rate
9	-	min	Fluoro time (for the channel)
10	-	mGy	Cumulative air kerma
11		System time / stop-watch	Displays the system time. If the stopwatch is active, the stopwatch time is displayed
12	-	X-ray protocol	The selected procedure settings
13	-	fps	Exposure speed (selected/actual)
14	-	Fluoroscopy flavor	The currently selected fluoroscopy flavor
15		Table tilt [1]	The table tilt angle
		Table cradle [1]	The table cradle angle
		Table pivot [1]	The table pivot angle
16		Table lateral isocenter offset [1]	The lateral offset of the table from the isocenter position
		Table longitudinal iso-center offset [1]	The longitudinal offset of the table from the isocenter position
		Table height isocenter offset [1]	The height offset of the table from the isocenter position
		Isocenter [1]	The table is in the isocenter position
17	-	Dose area product	Displays the cumulative dose area product (Gy cm^2)
18	-	Total fluoroscopy time	Displays the total fluoroscopy time

[1] If a collision is detected, this section in the status area displays collision detection warnings and icons.

[2] Only displayed if the thorax region is selected.

Status Area On FlexVision (Biplane System)

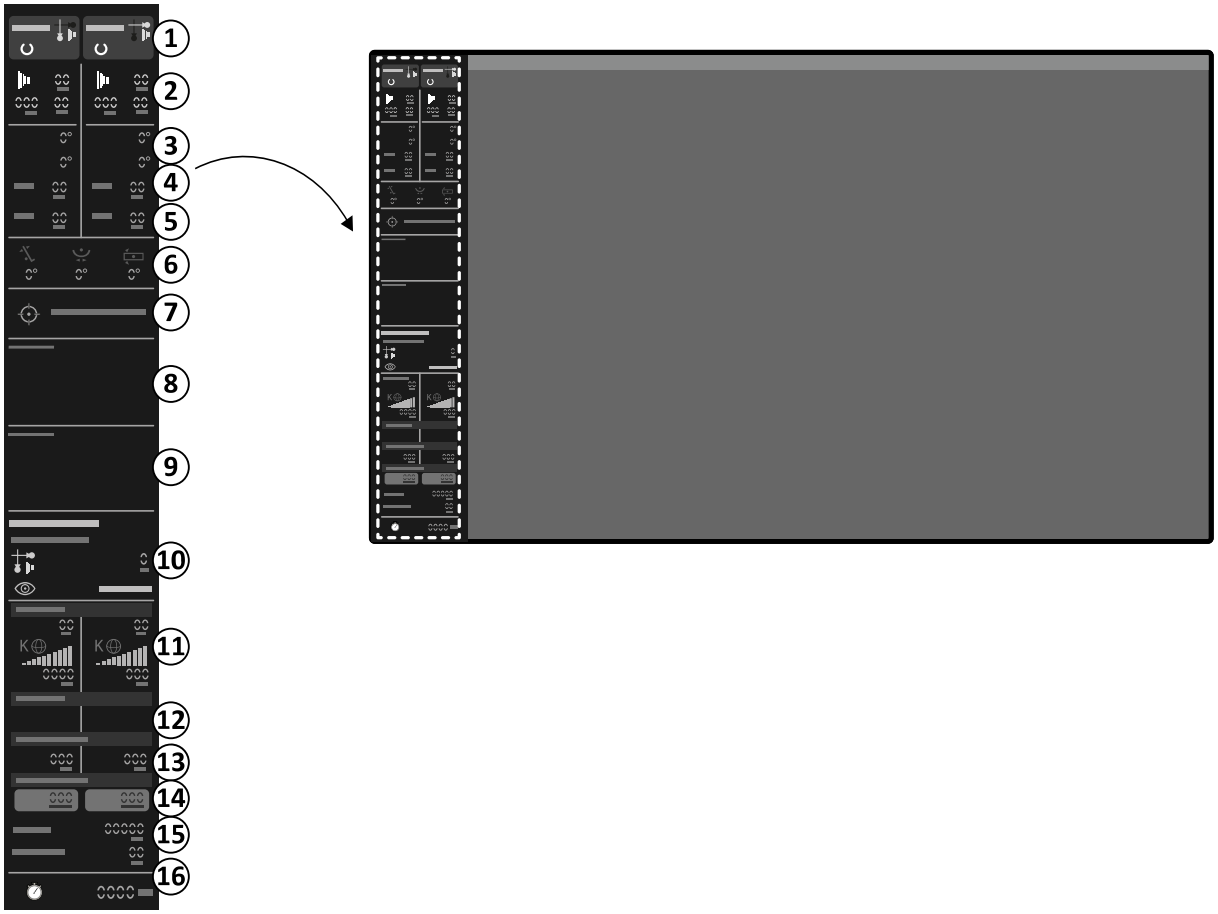

Legend			Description
1		Channel indicator	Frontal channel
		Channel indicator	Lateral channel
		System status	The system is ready for exposure (when a channel is selected for exposure, this section of the status area is highlighted)
		System status	The system is not ready for exposure
		X-ray status	X-ray is on
		X-ray status	X-ray is disabled
		Tube load	The tube is overheated

Legend			Description
2		Fluoroscopy	Fluoroscopy settings are displayed
		Exposure	Exposure settings are displayed
	-	kV	X-ray generator settings
	-	mA	
	-	ms	
3	-	LAO	C-arm rotation angle
	-	CRAN	C-arm angulation angle
4	-	SID	The actual or target source-to-image distance
5	-	FD	The selected detector size
6		Table tilt [1]	The table tilt angle
		Table cradle [1]	The table cradle angle
		Table pivot [1]	The table pivot angle
7		Isocenter [1]	The table is in the isocenter position
8	-	Frontal channel system messages	System information, warnings, and error messages for the frontal channel
9	-	Lateral channel system messages	System information, warnings, and error messages for the lateral channel
10	-	X-ray protocol	The selected procedure settings
	-	fps	Exposure speed (selected/actual)
	-	Fluoroscopy flavor	The currently selected fluoroscopy flavor
11	-	Dose model	For more information, see *Dose Model* (page 428)
12	-	mGy/min	Air kerma rate
13	-	min	Fluoro time (for the channel)
14	-	mGy	Cumulative air kerma
15	-	Dose area product	Displays the cumulative dose area product (Gy cm^2)
	-	Total fluoroscopy time	Displays the total fluoroscopy time
16		System time / stop-watch	Displays the system time. If the stopwatch is active, the stopwatch time is displayed

[1] If a collision is detected, this section in the status area displays collision detection warnings and icons.

[2] Only displayed if the thorax region is selected.

Status Area On FlexSpot (Biplane System)

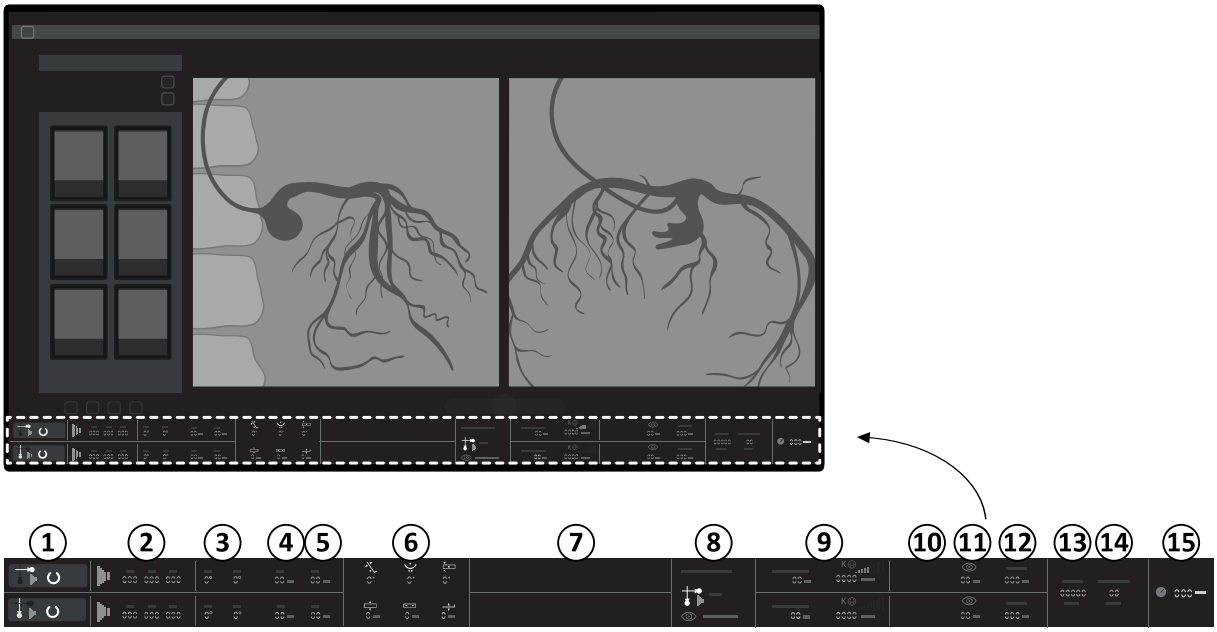

Legend			Description
1		Channel indicator	Frontal channel
		Channel indicator	Lateral channel
		System status	The system is ready for exposure (when a channel is selected for exposure, this section of the status area is highlighted)
		System status	The system is not ready for exposure
		X-ray status	X-ray is on
		X-ray status	X-ray is disabled
		Tube load	The tube is overheated
2		Fluoroscopy	Fluoroscopy settings are displayed
		Exposure	Exposure settings are displayed
	-	kV	X-ray generator settings
	-	mA	
	-	ms	
3	-	LAO	C-arm rotation angle
	-	CRAN	C-arm angulation angle
4	-	SID	The actual or target source-to-image distance
5	-	FD	The selected detector size

Legend			Description
6		Table tilt [1]	The table tilt angle
		Table cradle [1]	The table cradle angle
		Table pivot [1]	The table pivot angle
		Table lateral isocenter offset [1]	The lateral offset of the table from the isocenter position
		Table longitudinal isocenter offset [1]	The longitudinal offset of the table from the isocenter position
		Table height isocenter offset [1]	The height offset of the table from the isocenter position
		Isocenter [1]	The table is in the isocenter position
7	-	System messages	System information, warnings, and error messages (for each channel)
8	-	X-ray protocol	The selected procedure settings
	-	fps	Exposure speed (selected/actual)
	-	Fluoroscopy flavor	The currently selected fluoroscopy flavor
9	-	Dose model	For more information, see *Dose Model* (page 428)
10	-	mGy/min	Air kerma rate
11	-	min	Fluoro time (for the channel)
12	-	mGy	Cumulative air kerma
13	-	Dose area product	Displays the cumulative dose area product (Gy cm^2)
14	-	Total fluoroscopy time	Displays the total fluoroscopy time
15		System time / stopwatch	Displays the system time. If the stopwatch is active, the stopwatch time is displayed

[1] If a collision is detected, this section in the status area displays collision detection warnings and icons.

[2] Only displayed if the thorax region is selected.

18.5.3 Collision Indicators

When a collision is detected, a collision indicator is displayed in the status area.

Icon	Description
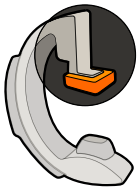	A detector collision has been detected
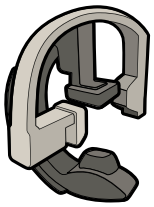	A collision of the frontal stand and the lateral stand has been detected (for more information, see *Intelligent Collision Protection* (page 32))

Icon	Description
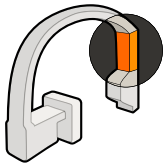	A lateral stand collision has been detected
	A detector collision on the lateral stand has been detected
	A tube collision on the lateral stand has been detected
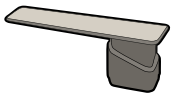	A table collision has been detected
	A collision between the stand and the table has been detected (for more information, see *Intelligent Collision Protection* (page 32))
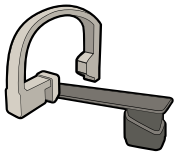	A collision between the lateral stand and the table has been detected (for more information, see *Intelligent Collision Protection* (page 32))

18.6 Toolbars

Acquisition and Review Windows

Tool	Function	Description
	Default	Default selection
	Zoom	Zoom the image
	Pan	Pan the image
	Contrast and Brightness	Adjust the contrast and brightness of the image
	Edge enhancement	Sharpen or soften edges in the image
	Interventional room pointer	Activate the image pointer
	Subtraction	Switch subtraction on or off

Tool	Function	Description
	Pixel shift	Reposition the mask image
	Landmarking	Apply landmarking
	Fluoro store	Store fluoroscopy images
	Copy to Reference 1	Copy the current image to the Reference 1 window On biplane systems, the frontal image is copied.
	Copy to Reference 2	Copy the current image to the Reference 2 window On biplane systems, the lateral image is copied.
	Copy to Reference 3	Copy the current image to the Reference 3 window On biplane systems, images from both channels are copied, and are displayed side by side and synchronized.
	Flag image	Flag the current image
	Flag series	Flag the current series
	Link image processing (biplane systems only)	Sets the scope when processing biplane images: • **Biplane Unlinked**: Changes can be applied independently to both the frontal and lateral images • **Biplane Linked**: Changes applied to one image are automatically applied to both the frontal and lateral images
	Snapshot	Copy the current image as a photo image
	Quantitative Coronary Analysis	Starts Quantitative Coronary Analysis
	Quantitative Vascular Analysis	Starts Quantitative Vascular Analysis
	Left Ventricular Analysis	Starts Left Ventricular Analysis
	Biplane Left Ventricular Analysis	Starts Biplane Left Ventricular Analysis
	Right Ventricular Analysis	Starts Right Ventricular Analysis
	Biplane Right Ventricular Analysis	Starts Biplane Right Ventricular Analysis
	Reset	Reset image processing

Series Review

Tool	Function	Description
	Play	Play the series review
	Pause	Pause the series review

Tool	Function	Description
	Next image	Display the next image in the series
	Previous image	Display the previous image in the series
	Next series	Display the next series in the study
	Previous series	Display the previous series in the study
	Frame rate	Adjust the frame rate
	Cycle all	Play all images and series in the study
	Image overview	Show an overview of all images in the series
	Series overview	Show an overview of all series in the study

18.7 Global Tools

The global tools are available in all tasks and provide tools for printing images, exporting images, and displaying patient information.

Tool		Function
	**Export**	Exports the image as seen in the main window. You can select the destination (connected device or location) and the format.
	**Archive Preview**	Displays a preview of the series and images to be automatically archived when the current study is ended. Series and images are automatically archived if automatic data transfer is configured. For more information about configuring the system to transfer data automatically, see *Configuring Automatic Data Transfer* (page 244).
	**Add to Print Preview**	Adds the image as seen in the main window to the print queue. The print queue can be managed using the Print application.
	**Image overlays**	Provides different levels of patient information that can be displayed on the image in the main window: • **Full image information** • **Limited image information** • **Minimum image information** (mandatory information) On biplane series, image overlays are displayed for each channel, except for the patient identification, which is displayed on the frontal image only.

18.8 Monoplane Control Module

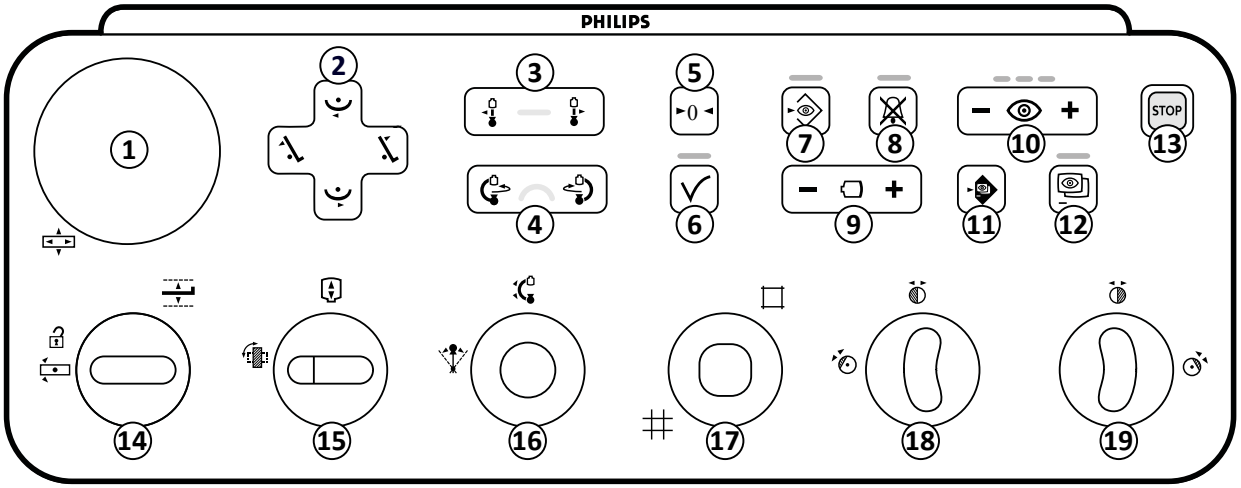

Figure 184 Monoplane control module

Legend			Description
1		Float tabletop	Moves the tabletop in the longitudinal and lateral directions. This function operates only at the table side position. It is disabled in the control room and at the pedestal.
2		Tilt table	Tilts the table up.
		Tilt table	Tilts the table down.
		Cradle table	Cradles the table left.
		Cradle table	Cradles the table right.
3		Move stand (longitudinal)	Moves the stand longitudinally (ceiling-mounted only).
4		Rotate stand	Rotates (swings) the stand.
5	►0◄	Reset geometry	Resets the stand and table to a default position. This function is disabled in the control room.
6		Accept	Recalls a selected APC or table position. The indicator light flashes when a new position is selected or when the stand is moved away from the selected position. The indicator light is on while the position is being recalled. The indicator light is off when the selected position is reached.

Legend			Description
7		Store fluoroscopy	Stores fluoroscopy images during and after fluoroscopy. If the indicator light is on during fluoroscopy, images are being stored. After fluoroscopy, the indicator light flashes once to indicate images have been stored.
8		Reset fluoroscopy buzzer	Reset the fluoroscopy buzzer. The indicator light flashes when the buzzer is activated.
9		Field of view	Increases and decreases the detector field of view.
10		Fluoroscopy flavor	Selects the fluoroscopy level to be used. The three indicator lights show the selected level. When low load-fluoroscopy is selected the indicator lights are off. • One indicator light: Low (with ClarityIQ (option): Low) • Two indicator lights: Normal (with ClarityIQ (option): Medium) • Three indicator lights: High (with ClarityIQ (option): Normal)
11		SmartMask	Selects the current image as the SmartMask image. This function is disabled if the selected procedure settings do not support roadmap.
12		Roadmap	Switches the roadmap function on or off. This function is disabled if the selected procedure settings do not support roadmap.
13		Emergency stop	Stops all geometry movements. For information about restarting after an emergency stop, see *Restarting the System* (page 46).
14		Table height	Adjusts the height of the table.
		Table pivot unlock	Unlocks the table pivot lock.
15		Detector position	Moves the detector between portrait and landscape positions.
		Source-to-image distance	Changes the source-to-image distance.
16		Angulation	Controls the angulation position of the stand.
		Rotation	Controls the rotation position of the stand.
17	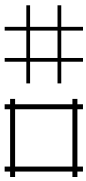	Shutters	Opens and closes the shutters.
18		Left wedge	Moves, rotates, and resets the left wedge.
19		Right wedge	Moves, rotates, and resets the right wedge.

18.9 Biplane Control Modules

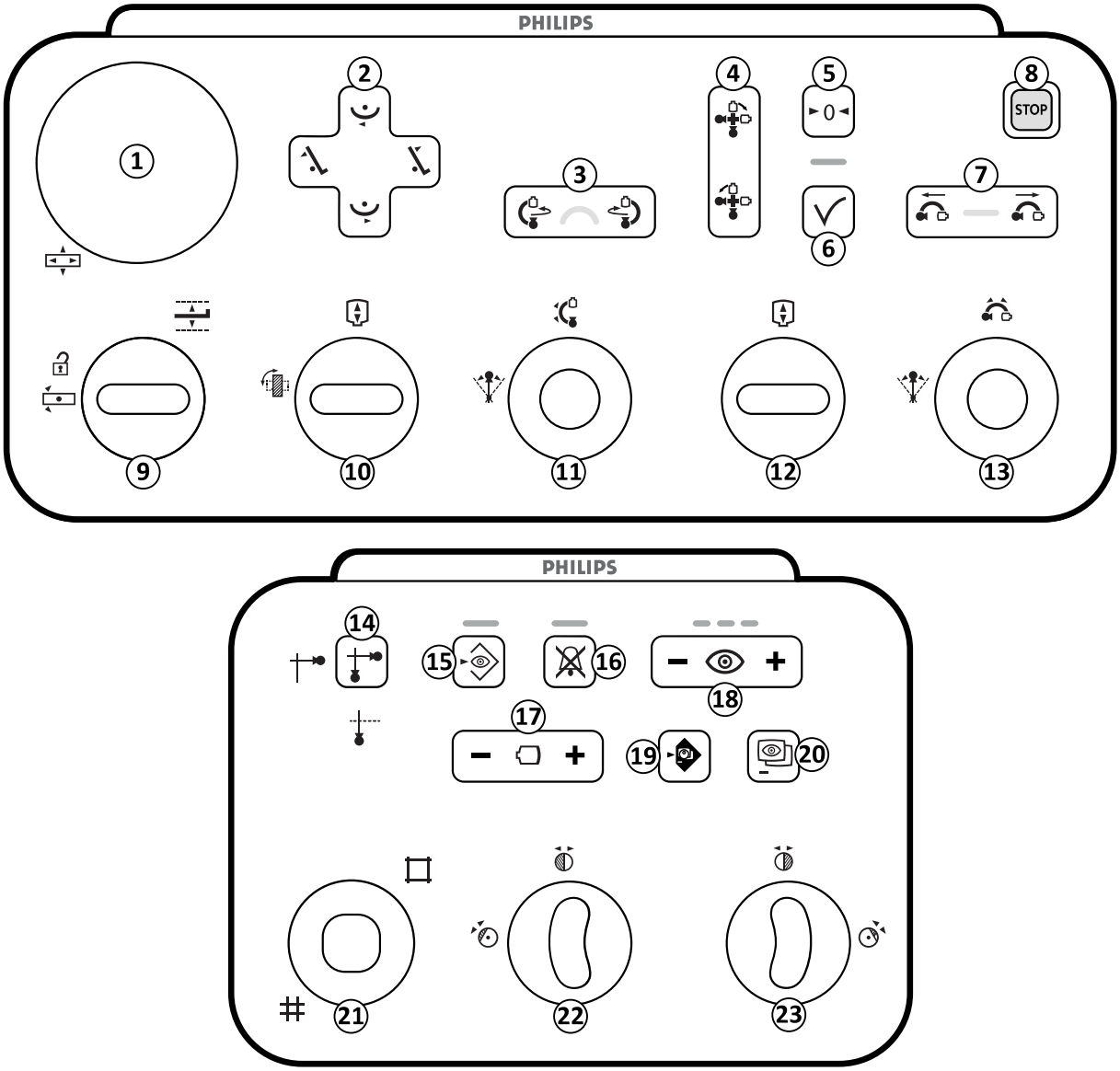

Legend			Description
1		Float tabletop	Moves the tabletop in the longitudinal and lateral directions. This function operates only at the table side position. It is disabled in the control room and at the pedestal.
2		Tilt table	Tilts the table up.
		Tilt table	Tilts the table down.
		Cradle table	Cradles the table left.
		Cradle table	Cradles the table right.

Legend		Description
3	 Rotate frontal stand	Rotates (swings) the frontal stand.
4	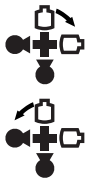 Rotate biplane	Rotates (swings) the frontal stand and the lateral stand.
5	 Reset geometry	Resets the stand and table to a default position. This function is disabled in the control room.
6	 Accept	Recalls a selected APC or table position. The indicator light flashes when a new position is selected or when the stand is moved away from the selected position. The indicator light is on while the position is being recalled. The indicator light is off when the selected position is reached.
7	 Move lateral stand (longitudinal)	Moves the lateral stand longitudinally.
8	 Emergency stop	Stops all geometry movements. For information about restarting after an emergency stop, see *Restarting the System* (page 46).
9	 Table height	Adjusts the height of the table.
	 Table pivot unlock	Unlocks the table pivot lock.
10	 Detector position	Moves the detector between portrait and landscape positions.
	 Source-to-image distance	Changes the source-to-image distance of the frontal stand.
11	 Angulation	Controls the angulation position of the frontal stand.
	 Rotation	Controls the rotation position of the frontal stand.
12	 Source-to-image distance	Changes the source-to-image distance of the lateral stand.
13	 Angulation	Controls the angulation position of the lateral stand.
	 Rotation	Controls the rotation position of the lateral stand.
14	 Select channel	Steps through the acquisition channel options: frontal - lateral - biplane. The illuminated symbol indicates the current selection.

Legend			Description
15		Store fluoroscopy	Stores fluoroscopy images during and after fluoroscopy. If the indicator light is on during fluoroscopy, images are being stored. After fluoroscopy, the indicator light flashes once to indicate images have been stored.
16		Reset fluoroscopy buzzer	Reset the fluoroscopy buzzer. The indicator light flashes when the buzzer is activated.
17		Field of view	Increases and decreases the detector field of view on the selected acquisition channel (frontal, lateral, or both).
18		Fluoroscopy flavor	Selects the fluoroscopy level to be used. The three indicator lights show the selected level. When low load-fluoroscopy is selected the indicator lights are off. • One indicator light: Low (with ClarityIQ (option): Low) • Two indicator lights: Normal (with ClarityIQ (option): Medium) • Three indicator lights: High (with ClarityIQ (option): Normal)
19		SmartMask	Selects the current image as the SmartMask image. This function is disabled if the selected procedure settings do not support roadmap.
20		Roadmap	Switches the roadmap function on or off. This function is disabled if the selected procedure settings do not support roadmap.
21	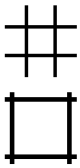	Shutters	Opens and closes the shutters on the frontal channel.
22		Left wedge	Moves, rotates, and resets the left wedge on the frontal channel.
23		Right wedge	Moves, rotates, and resets the right wedge on the frontal channel.

18.10 Review Module

The review functions on the review module operate on the active tab in the acquisition window.

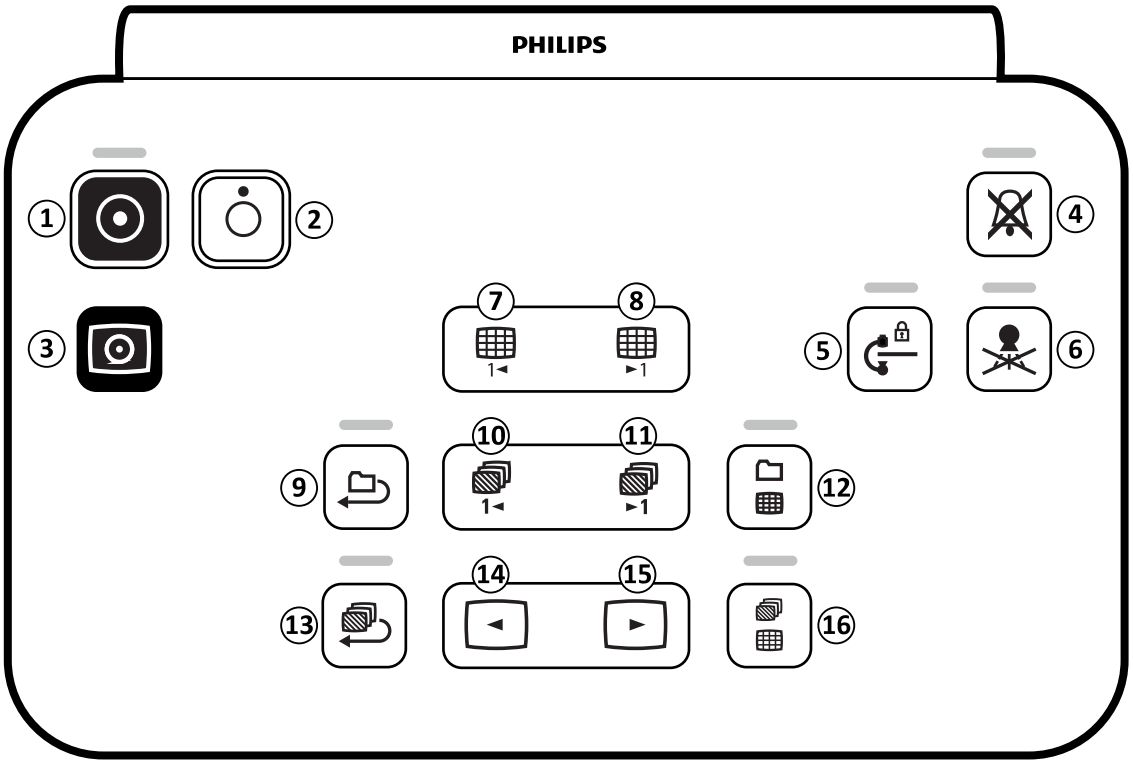

Figure 185 Review module

Legend			Description
1		Power on	Used to switch the system on or perform a warm restart. The indicator light is on when the system is on or starting. To operate, this button should be pressed for 2 seconds.
2		Power off	Used to switch the system off. To operate, this button should be pressed for 2 seconds.
3		Video on	Used to switch on the monitors only (video-only mode) in the examination and control rooms. The indicator light flashes during video-only start up and is on when the monitors are on in video-only mode. To operate, this button should be pressed for 2 seconds.
4		Reset fluoroscopy buzzer	Reset the fluoroscopy buzzer. The indicator light flashes when the buzzer is activated.
5		Disable geometry movements	Disables and enables stand and table movements. The indicator light is on when stand and table movements are disabled. To operate, this button should be pressed for 2 seconds.
6		Disable radiation	Disables and enables X-ray. The indicator light is on when X-ray is disabled.
7		Previous page	Displays the previous overview page in the series overview and study overview.
8		Next page	Displays the next overview page in the series overview and study overview.
9		Cycle all	Starts and stops replay of the images within the current series. The indicator light is on when replay is active.

Legend			Description
10		Previous series	Displays the previous series.
11		Next series	Displays the next series.
12		Study overview	Switches between overview and single study viewing modes. The indicator light is on when overview mode is in use.
13		Series replay	Starts and stops replay of the series within the current study. The indicator light is on when replay is active.
14		Previous image	Displays the previous image in a series. This function is disabled in study overview mode.
15		Next image	Displays the next image in a series. This function is disabled in study overview mode.
16		Series overview	Switches between overview and single image viewing modes. The indicator light is on when overview mode is in use.

18.11 Using the Mouse

You can access several function shortcuts with the mouse.

The following functions are available:

Left button: Click to select a tool or item.

Mouse wheel: Rotate to navigate the images of a series or items in a list.

Mouse wheel button: Press and hold to adjust the WW/WL or brightness/contrast settings.

Right button: Click to open the shortcut menu.

Right button: Drag (click and hold) to pan the image.

Mouse wheel button + right button: Drag (click and hold) zoom the image.

18.12 Viewpad

You can use the viewpad for viewing and processing in the live X-ray window or the reference windows from anywhere in the examination room.



When you activate a function on the viewpad, the function is applied to the viewport that currently has focus. A viewpad icon is displayed in the middle of the viewport for a moment, and is then displayed in the top bar of the viewport.

The viewpad contains a laser pointing device which is emitted from the front of the viewpad to point at the display monitors. You activate the laser pointing device using the button on the underside of the viewpad.

NOTE ***Do not point the laser into other people's eyes, as there is a risk of injury.***

Two different versions of the viewpad are available: Cardiac and Vascular. The Vascular viewpad has an extra row of buttons at the bottom of the viewpad.

When not in use, store the viewpad in the holder provided on the side of the touch screen module.

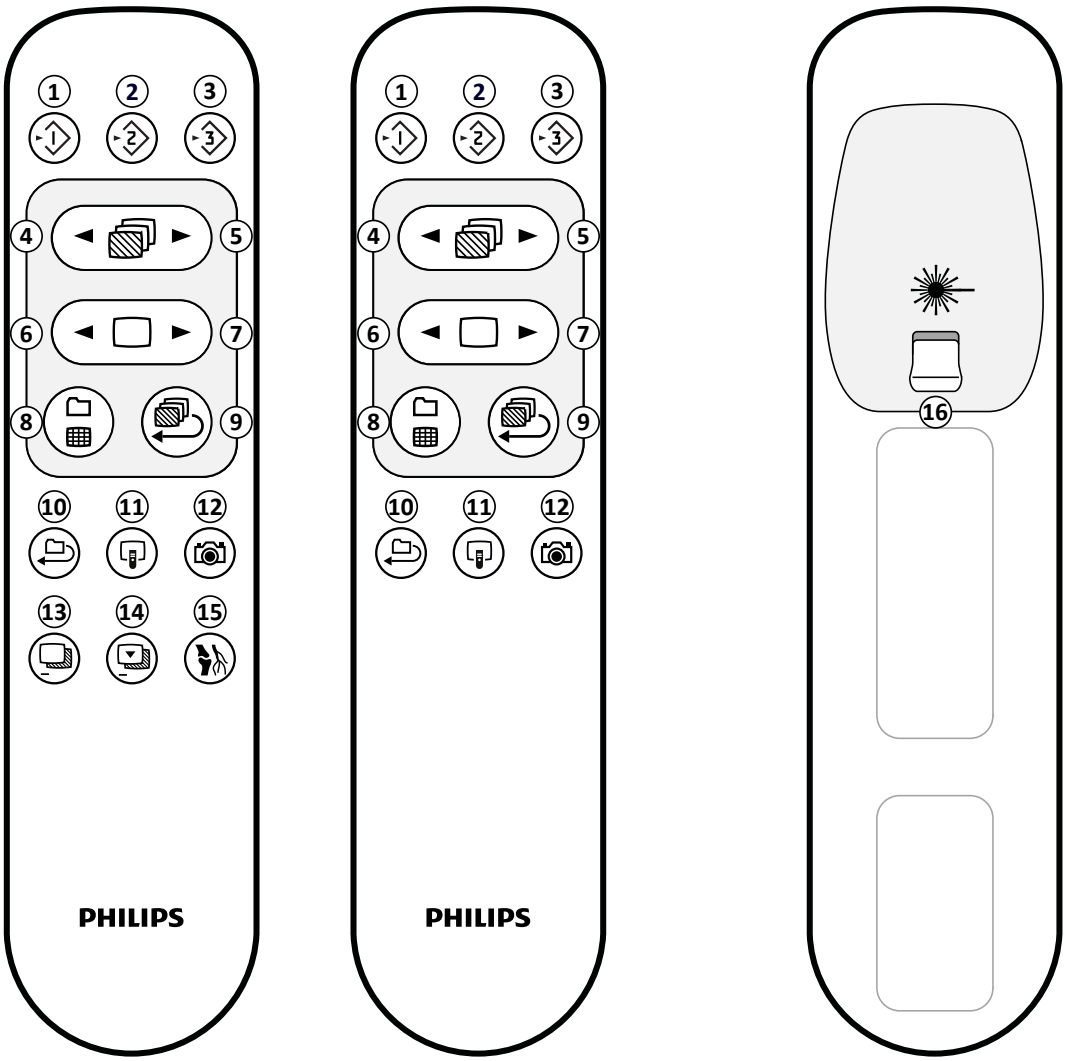

Figure 186 Viewpad: Vascular version (left), Cardio version (middle), and underside (right)

Legend			
1	Copies the current image to the Reference 1 window On biplane systems, the frontal image is copied.	9	Plays the current series in looped movie mode
2	Copies the current image to the Reference 2 window On biplane systems, the lateral image is copied.	10	Plays all series of the study in looped movie mode
3	Copies the current image to the Reference 3 window On biplane systems, images from both channels are copied, and are displayed side by side and synchronized.	11	Moves the focus of the viewpad between the live X-ray window and each of the reference windows
4	Displays the previous series	12	Creates a snapshot of the current image and stores it with the study
5	Displays the next series	13	Enables or disables subtraction (vascular viewpad only)
6	Displays the previous image	14	Sets the current image as the mask image for subtraction (vascular viewpad only)

Legend			
7	Displays the next image	15	Enables or disables landmarking (vascular viewpad only)
8	Displays all series in the study overview	16	Turns the laser pointer on or off

Viewpad Laser Aperture

The laser aperture of the viewpad is indicated with an arrow in the following illustration.

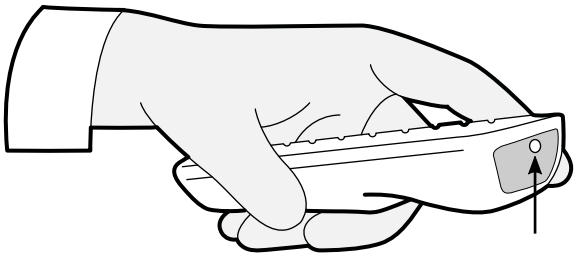

Figure 187 Viewpad laser aperture

18.13 Bolus Chase Reconstruction Main Window Toolbars

The main window displays the original images from the bolus chase acquisition.

The main window has a dedicated toolbar. It also has a navigation toolbar that you can use for reviewing images.

Main Window Toolbar

The toolbar in the main window provides tools for manipulating the original images.

Tool		Function
	**Select**	Selects an object (this is the default tool)
	**Zoom**	Zooms the image in or out
	**Pan**	Pans the image
	**Brightness / Contrast**	Adjusts the brightness or contrast of the image
	**Edge enhancements**	Sharpen or soften edges in the image
	**Subtraction On / Off**	Turns subtraction on or off (this tool is only available when a mask run is available)
	**Landmarking**	Adjusts the amount of subtracted background that is combined with the subtracted image
	**Copy to Reference**	Sends the image to a reference window in the examination room.
		
		

Tool		Function
	**Annotations**	Allows you to add an annotation to the image (the type of annotation can be selected from a submenu)
	**Snapshot**	Takes a snapshot of the image displayed and stores it with the current study in the patient database
	**Reset**	Resets the image to its original viewing settings

Navigation Toolbar

The navigation toolbar provides tools for reviewing the original images, either as a movie or by stepping through images one by one.

Tool		Function
	**Play**	Plays the original images as a movie
	**Stop**	Stops movie playback
	**Next image**	Displays original images sequentially forward through the run
	**Previous image**	Displays original images sequentially backward through the run

18.14 Bolus Chase Reconstruction Overview Image Window Toolbar

The overview image window in the Bolus Chase Reconstruction application displays the overview image that is reconstructed when the system receives a bolus chase run.

You can hide the overview image window to focus on the main window, if desired.

The overview image window has a dedicated toolbar, providing tools for manipulating the overview image.

Tool		Function
	**Select**	Selects an object in the window (this is the default tool)
	**Brightness / Contrast**	Adjusts the brightness or contrast of the image
	**Subtraction On / Off**	Turns subtraction on or off (this tool is only available when a mask run is available)
	**Landmarking**	Adjusts the amount of subtracted background that is combined with the subtracted image
	**Copy to Reference**	Sends the current image to a reference window in the examination room.
		
		

Tool		Function
	**Annotations**	Allows you to add an annotation to the image (the type of annotation can be selected from a submenu)
	**Snapshot**	Takes a snapshot of the image displayed and stores it with the current study in the patient database
	**Reset**	Resets the image to its original viewing settings

19 Glossary

In this section you can find help with definitions of terms that are used in these Instructions for Use and explanations of abbreviations.

19.1 Definitions

Definitions of the terms used in the Instructions for Use are provided here.

19.1.1 Windows, Panels, Views, and Viewports

These terms are used to describe the viewing environment in which an application is displayed.

Window: A window is the overall container in which an application is viewed. It contains all the functions, images, and information that the application provides.

Depending on the application, a window might be divided into several areas:

- **Task selection panel**: A task selection panel contains the tasks that are applicable for the application. When you select a task, a dedicated task panel is displayed.
- **Task panel**: A task panel contains all the functions that you use to complete the selected task.
- **View**: A view contains information or images that are relevant to the application.
- **Viewport**: A viewport is a container inside a view that provides additional information that is relevant to the view. Viewports might contain, for example, orthogonal reference images or numerical information such as graphs and tables.

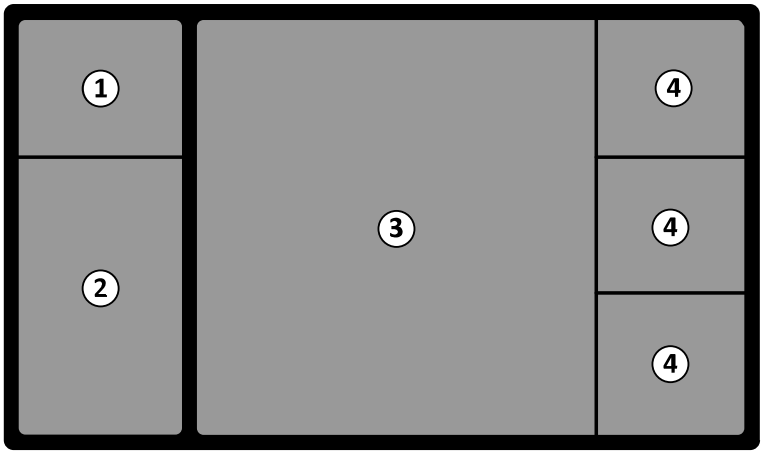

Figure 188 Parts of a window

Legend			
1	Task selection panel	3	View
2	Task panel	4	Viewport

The terms **monitor** or **screen** are not used to describe the software interface of the system. When these terms are used, they refer to the physical monitor or screen unit.

NOTE ***The configuration of the monitors and screens used with the system is flexible. A window that is described in these Instructions for Use might appear on a dedicated monitor in the examination room or in the control room, or in both. If the FlexVision or FlexSpot options are installed, it may appear as part of a larger screen that can display multiple applications.***

Consequently, when describing applications in these Instructions for Use, it is not always possible to indicate exactly on what monitor or screen that it appears.

Interacting with Windows

You can enlarge windows and display them full-screen, or you can minimize them to the last position. You can also manually resize a window by dragging it's edge.

To activate the application in a window, click anywhere within the borders of the window. The borders of the window are yellow indicating that the window is selected. Only one window is active at a time.

When you move the pointer over the application window, the toolbar, task navigation panel, and review toolbar become visible. If there is no interaction in the application window after a few seconds the toolbar and review toolbar are automatically hidden. Move the pointer over the area to display them again.

When you position the pointer within the borders of the window, the header becomes active and the following interactions are available:



- Click to maximize the window.



- Click to restore the window to the initial size.



- Click to adjust the window to the actual pixel size.



- Click to hide the application in a window. When an application is hidden, its icon is shown in the middle of the window. Click the icon to display the application again.



- Click to create a snapshot of the application in the window. The snapshot is stored with the study of the current acquisition patient.

Interacting with Panels

You can expand panels to make tools or tasks available, and then collapse them to create a less cluttered environment, for example, while viewing:



- Click the expander to open the panel or window.



- Click the expander to close the panel or window.



- This icon indicates that there are more functions available. Click to display them.



- Click to close the panel or window.

19.1.2 Patient Table: Doctor Side and Nurse Side

These definitions assume that the patient is supine on the table, with feet toward the table base.

With this patient orientation, the doctor side is the right side of the table (corresponding to the right side of the patient), and the nurse side is the left side of the table. The head end of the table is the end furthest away from the table base, and the foot end is the end nearest to the table base.

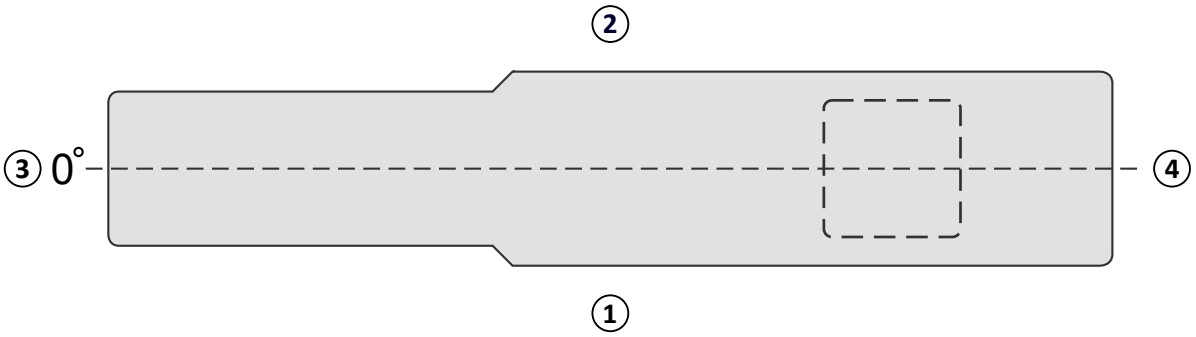

Figure 189 Top view of the patient table

Legend			
1	Doctor side	3	Head end
2	Nurse side	4	Foot end

19.1.3 Dose Related Definitions

The following definitions are used in these Instructions for Use.

Patient Entrance Reference Point

The patient entrance reference point is an approximation for the location of the patient's skin (see IEC 60601-1-3:2008, 3.43 and IEC 60601-2-43:2010, 203.5.2.4.5.101d)).

NOTE ***The distance from focal point to the isocenter can be different per type of geometry (see 4.1), resulting in different reference air kerma values under the same circumstances.***

NOTE ***The patient entry reference point may also be known as the interventional reference point.***

It is located on the central axis of the X-ray beam, 15 cm from the isocenter, towards the focal spot. Depending on the patient's size, the table height and the direction of the X-ray beam, the PERP may be outside the patient (as in the left figure), may coincide with the skin surface, or may be inside the patient (as in the right figure).

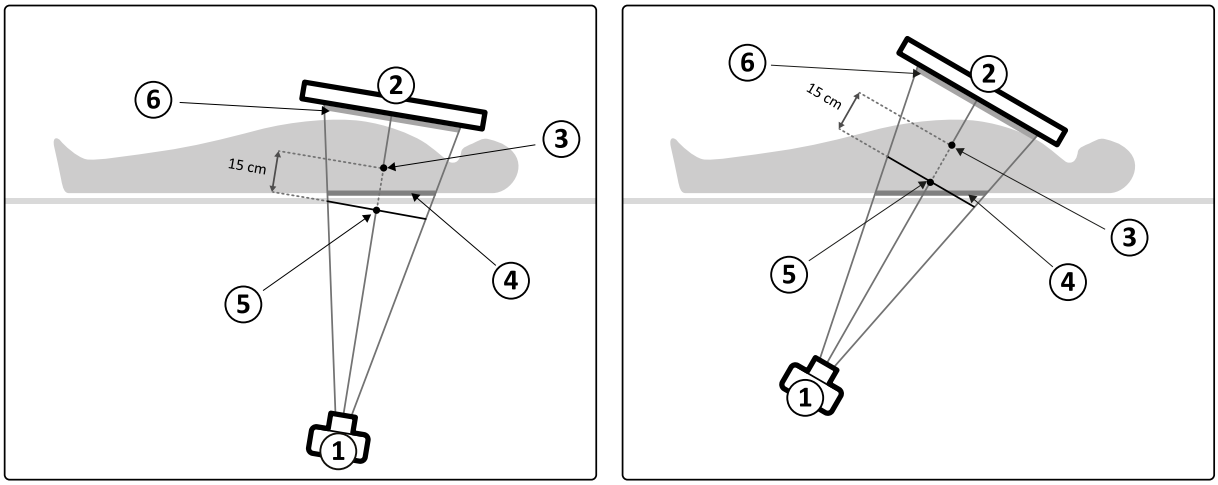

Figure 190 Patient entrance reference point

Legend			
1	X-ray tube	4	Entrance surface
2	Detector	5	Patient entrance reference point

Legend			
3	Isocenter	6	Detector dose

Air Kerma (AK)

The amount of kinetic energy released in air by ionizing radiation. Or more precisely, the quotient of dEtr by dm, where dEtr is the sum of the initial kinetic energies of all the charged particles liberated by uncharged particles in a mass of dm of air (see IEC 60601-1-3:2008, 3.4 and ICRU 60 (1998)). It is expressed in mGy, where 1 Gy = 1 Joule / kg (see IEC 60601-2-43:2010, 203.6.4.5).

Air Kerma Rate

The amount of air kerma per unit of time, expressed in mGy/min (see IEC 60601-2-43:2010, 203.6.4.5).

Reference Air Kerma

The air kerma free in air in the primary X-ray beam measured under specific conditions as specified in *Reference Air Kerma Measurement Setup* (page 349), and expressed in the patient entrance reference point (see IEC 60601-1-3:2008, 3.70).

NOTE ***The reference air kerma value is independent of the actual position of the patient, for example, the table height, as it is measured at a specific point in space.***

For exposure, the reference air kerma is expressed in mGy per image.

Reference Air Kerma Rate

The amount of reference air kerma per unit of time. For fluoroscopy the reference air kerma Rate is expressed in mGy/min.

Peak Air Kerma

The highest air kerma that any point of an irradiated surface is exposed to.

Skin Dose

The absorbed dose delivered by ionizing radiation to the patient's skin at the point of irradiation. Skin dose is expressed in Gy or mGy. Unlike the reference air kerma, this value indicates the actual energy absorption under the present conditions.

Skin Dose Rate

The skin dose per unit of time, expressed in Gy/s or mGy/s.

Peak Skin Dose

The highest skin dose that any portion of the patient’s skin is exposed to.

Staff Dose

Staff dose is the effective dose received by a healthcare professional during an examination, resulting primarily from scatter radiation emitted by the patient. The effective dose is expressed in unit mSv (milliSievert).

Dose Area Product

The product of the area of a cross-section of an X-ray beam and the averaged air kerma over that cross-section, expressed in $Gycm^2$ (see IEC 60601-2-54:2009, 201.3.203 and IEC 60601-2-43:2010, 203.6.4.5).

Unlike skin dose and air kerma, the dose area product value is independent of the distance to the focal spot.

NOTE ***Other vendors might use other units to express the dose area product. This should be taken into account when comparing dose values of different systems.***

Detector Dose
The residual dose at the anti-scatter grid on the detector after the X-rays have passed the patient. The system uses the detector dose as an input to regulate the amount of X-ray radiation in order to obtain the proper image quality.

Deterministic Effects
Deterministic effects of ionizing radiation are related on a microbiological scale to cell destruction caused by high radiation levels. Deterministic effects or tissue reactions may occur when the radiation dose has exceeded a certain threshold level, which may depend on the irradiated tissue or organ and on the patient's sensitivity to radiation. When the threshold is exceeded, the severity of the tissue reactions increases with increased radiation dose.

The effects can be directly related to the radiation exposure. On a microbiological scale, these effects are related to cell destruction caused by high radiation levels. The threshold dose is typically 2 Gy for transient skin erythema (redness of the skin) and 3 Gy for temporary hair loss.

The air kerma is a measure to estimate the deterministic effects of ionizing radiation.

Stochastic Effects
Stochastic effects of ionizing radiation are related on a microbiologial scale to cell mutations due to DNA damage caused by low radiation levels. Such mutations may be controlled and eliminated by the human body or may develop into cancer on the long term (many years). It is difficult to show a direct relationship between radiation exposure and cancer for individual cases. The International Commission on Radiological Protection assumes that the stochastic risk or probability of developing cancer is linear with the total radiation dose received, and that there is no threshold as with the deterministic risk. Unlike the deterministic risk, the stochastic risk does not change if dose is spread over multiple parts of the body.

The dose area product is a measure to estimate the stochastic effects of ionizing radiation.

Patient Thickness
The depth of tissue irradiated, expressed in cm H_2O or cm PMMA.

19.1.4 Dose Model

To determine the applied dose on various parts of the patient’s body and to assist in reducing the deterministic effects of radiation, a dose model is used.

In this model the human body is divided into four zones.

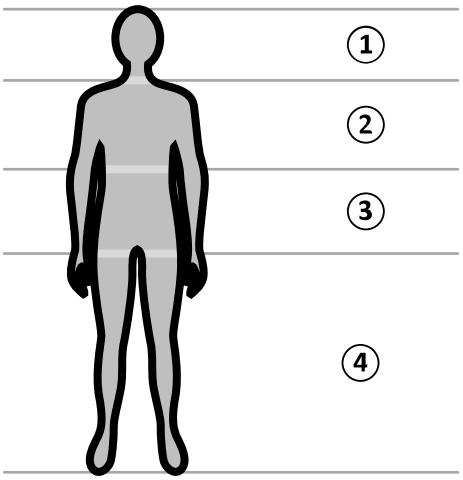

Figure 191 Body zones

Legend			
1	Head	3	Abdomen
2	Thorax	4	Peripheral

The dose model is further refined for the thorax body zone, as defined in the exposure procedure X-ray protocols.

For the thorax body zone, the skin is modeled as a sphere of 30 cm diameter, positioned around the isocenter. The surface of this sphere is divided into 10 areas corresponding to different projections of the X-ray beam: five at the cranial side and five at the caudal side.

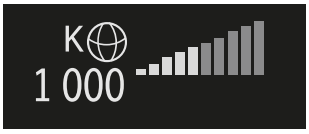

Figure 192 Dose model applied in the area corresponding to the current position (rotation and angulation) of the stand

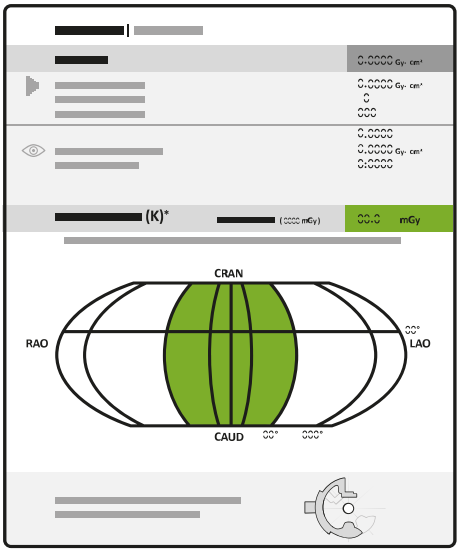

Figure 193 Dose model displayed in the dose report

Every body area is divided into a number of spots of approximately 0.5 x 0.5 cm, with one spot for every degree of beam rotation and angulation.

The radiated skin area corresponds with the part of the skin that is actually irradiated, which depends on the geometrical projection of the X-ray beam and the position of the collimator shutters.

The exposed body area (shaded grey) is the body area that is covered most by the radiated skin area.

The system keeps track of the peak air kerma that is applied to every irradiated body zone of the sphere via real-time dose calculation.

You can see the following X-ray dose information:
- The total actual cumulative air kerma for the whole body is shown as a number.
- During radiation, the actual cumulative peak air kerma and the peak air kerma rate of the hottest spot within the radiated body zone, is shown as a number and as a graphical representation.
- During radiation and standby, the predicted remaining fluoroscopy time until the threshold is reached is shown for the current X-ray beam projection.
- Visual feedback, for example, a change of color on the screen, when the cumulative peak air kerma in the radiated body zone becomes higher than a customizable threshold. The default setting is 2 Gy. You are warned that continuing radiating in the current projection might lead to increased risk of deterministic effects. To solve this, you should change the projection of the X-ray beam so that another body area is exposed, or modify the system settings as described in *X-ray Protocol Selection* (page 292).

The zone dose information is immediately adapted when you change the field size, the source-to-image distance, the fluoroscopy flavor, or the X-ray beam projection.

19.1.5 Interventional Tools

Interventional Tools extend the functionality of compatible X-ray equipment with 3D imaging during an interventional procedure.

The Interventional Tools are a suite of software products that help physicians diagnose and treat medical diseases. The applications are mainly used in the cathlab during an interventional procedure, and fulfill the following main goals:
- Understanding the situation
- Plan the intervention
- Support the intervention
- Verify the results of the intervention

The Interventional Workspot supports Interventional Tools by providing central data administration functions such as patient administration, printing and export. A basic viewing application is also provided. Each Interventional Tool is provided with dedicated Instructions for Use containing details of using the specific image processing tools associated with the Interventional Tool.

19.1.6 Injector Control Methods

Depending upon your system configuration, you may use either one or two switches when using contrast injection, in coupled or uncoupled modes.

For all control methods, you must prepare the injector manually at an appropriate time.

Always refer to the instructions for use for your injector for more information about using the injector.

Uncoupled Operation

Since uncoupled operation of a contrast injector does not involve communication between the X-ray system and the contrast injector, you will use more than one switch when operating in uncoupled mode.

This involves using one switch to operate the injector and another switch (hand switch or foot switch) on the X-ray system to acquire images.

Coupled Operation One-Switch Method
When using a one-switch method to control contrast injection, you control image acquisition and contrast injection using the same switch. One-switch operation is a coupled operation mode. When you press the hand switch or foot switch to acquire images, the X-ray system also controls the injection of the contrast medium.

Coupled Operation Two-Switch Method
When using a two-switch method in coupled mode, you control image acquisition and contrast injection using separate switches. When you press the X-ray system hand switch or foot switch to start acquiring images, you must press the injector control switch simultaneously to inject contrast. The X-ray system synchronizes image acquisition with contrast arrival through the X-ray delay settings.

19.2 Abbreviations

A guide to the abbreviations that you may find in these Instructions for Use is provided here.

Abbreviation	Definition	Explanation
2D	2 Dimensional	Viewing mode
3D	3 Dimensional	Viewing mode
A	Amperes	Unit of measurement (electric current)
ACQ	Acquisition	Procedure
AK	Air Kerma	Dose measurement
Al	Aluminum	Metallic element
ANG	Angulation	Geometry setting
AAMI	Association for the Advancement of Medical Instrumentation	National standards organization
ANSI	American National Standards Institute	National standards organization
AP	Anterior-Posterior	Stand projection
APC	Automatic Position Control	Geometry setting
BCR	Bolus Chase Reconstruction	Procedure
BPM	Beats per Minute	Anatomical measurement
BSA	Body Surface Area	Anatomical measurement
CAU	Caudal	Stand projection
CAUD	Caudal	Stand projection
CBCT	Cone beam computed tomography	Imaging technique
CD	Compact Disc	Removable storage media
CE	Conformité Européenne	Product certification mark
CIS	Cardiology Information System	Network interface
CISPR	Comité International Spécial des Perturbations Radioélectriques (International Special Committee on Radio Interference)	International standards organization
cm	Centimeters	Unit of measurement (distance)
CPR	Cardiopulmonary Resuscitation	Procedure
CRA	Cranial	Stand projection
CRAN	Cranial	Stand projection

Abbreviation	Definition	Explanation
CSA	Canadian Standards Association	National standards organization
CT	Computed Tomography	Imaging technique
CTDI	Computed Tomography Dosimetry	Type of phantom used for CBCT acquisition
Cu	Copper	Metallic element
DAP	Dose Area Product	Dose measurement
DHCP	Dynamic Host Configuration Protocol	Network protocol
DICOM	Digital Imaging and Communications in Medicine	Image file format (suitable for diagnostic purposes)
DNS	Domain Name Server	Network configuration item
DVD	Digital Versatile Disc	Removable storage media
EAC	Eurasian Conformity	Product certification mark
ECG	Electrocardiogram	Anatomical measurement
ED	End Diastole	Anatomical state
EDV	End Diastole Volume	Anatomical measurement
EF	Ejection Fraction	Anatomical measurement
EMC	Electromagnetic Compatibility	Electrical environment
EMF	Electromagnetic Fields	Electrical environment
EP	Electrophysiology	Procedure
EPO	Emergency Power Off	Hardware function
ES	End Systole	Anatomical state
ESD	Electrostatic Discharge	Electrical environment
ESV	End Systole Volume	Anatomical measurement
F	French	Unit of measurement (catheters)
FDA	Food and Drug Administration	US government agency
FDPA	Flexible Dynamic Peripheral Angiography	Procedure
FPS	Frames Per Second	Acquisition speed
FOV	Field Of View	Viewing mode
HD	High Definition	Viewing mode
HD	High Dose	Procedure setting (protocol)
HIS	Hospital Information System	Network interface
hPA	Hectopascal	Unit of measurement (pressure)
HQ	High Quality	Procedure setting (protocol)
HU	Houndfield Unit (CT numbers)	Unit of measurement (radiodensity)
Hz	Hertz	Unit of measurement (frequency)
I.A.	Intra-Arterial	Contrast agent delivery method
iCP	Intelligent Collision Protection	System equipment
ID	Identification	Patient information
IEC	International Electrotechnical Commission	International standards organization
in	Inches	Unit of measurement (distance)
IP	International Protection marking	Rating indicating protection against ingress of particles and liquid (IEC 60529)
IP	Internet Protocol	Network protocol
I.V.	Intravenous	Contrast agent delivery method
kg	Kilograms	Unit of measurement (weight)
kHz	Kilohertz	Unit of measurement (frequency)
kPA	Kilopascal	Unit of measurement (pressure)
kV	Kilovolts	Unit of measurement (electrical potential)

Abbreviation	Definition	Explanation
kW	Kilowatts	Unit of measurement (power)
l	liters	Unit of measurement (volume)
LAO	Left Anterior Oblique	Anatomy
lbs	Pounds	Unit of measurement (weight)
LCA	Left Coronary Artery	Anatomy
LD	Low Dose	Procedure setting (protocol)
LED	Light Emitting Diode	Hardware
LVA	Left Ventricular Analysis	Postprocessing application
m	Meters	Unit of measurement (distance)
mA	Milliamperes	Unit of measurement (electric current)
MAC	Media Access Control	Hardware function
MCS	Monitor Ceiling Suspension	System equipment
min	Minutes	Unit of measurement (time)
MLD	Minimum Lesion Diameter	Anatomical measurement
mm	Millimeters	Unit of measurement (distance)
mOhm	Milliohm	Unit of measurement (electrical resistance)
MPEG	Motion Picture Experts Group	Video file format (not suitable for diagnostic purposes)
ms	Milliseconds	Unit of measurement (time)
N	Newtons	Unit of measurement (force)
OR	Operating Room	Working environment
PA	Posterior-Anterior	Stand projection
PACS	Picture Archiving and Communication System	Hardware
Pb	Lead	Material
PC	Personal Computer	Hardware
PE	Protective Earth	IEC definition
POAG	Potential Ausgleich (German term for Potential Equalization)	Equivalent to the IEC definition of Potential Equalization Connector
PMMA	Poly(methyl methacrylate)	Material (used in phantoms)
PNG	Portable Network Graphics	Image file format (not suitable for diagnostic purposes)
PPM	Parts Per Million	Unit of measurement (concentration)
PROP	Propeller	Geometry setting
QA	Quantitative Analysis	Postprocessing application
QCA	Quantitative Coronary Analysis	Postprocessing application
QVA	Quantitative Vascular Analysis	Postprocessing application
RA	Rotational Angiography	Postprocessing application
RAO	Right Anterior Oblique	Anatomy
RCA	Right Coronary Artery	Anatomy
RIS	Radiology Information System	Network interface
ROI	Region of Interest	Viewing mode
ROT	Rotation	Geometry setting
RVA	Right Ventricular Analysis	Postprocessing application
s	Seconds	Unit of measurement (time)
SID	Source-to-Image Distance	Geometry setting
SV	Stroke Volume	Anatomical measurement
TSM	Touch screen module	System equipment

Abbreviation	Definition	Explanation
UL	Underwriters Laboratories	National certification organization
USB	Universal Serial Bus	Removable storage media
V	Volts	Unit of measurement (electrical potential)
VA	Veterans Affairs	Government department (US)
VA	Volt-Amperes	Unit of measurement (electrical power)
W	Watts	Unit of measurement (power)
WLM	Worklist Manager	Network interface
XA	X-ray Angiography	Procedure
XL	Extra large	System equipment

Index

-

2D Quantitative Analysis *146*, *158–160*, *162–180*, *183–187*
– Acquiring images *159*
– Calibration *146*, *160*, *163–165*, *170–173*
– Intended use *158*
– LVA *160*, *169–171*, *173–180*, *183*
– QCA *160*, *162*, *163*, *166–169*
– QVA *160*, *162*, *163*, *166–169*
– RVA *160*, *170*, *171*, *173–180*, *183*
– Safety *159*
– Warnings and cautions *159*
3D Rotational Angiography *105*
3D-RA *105*
3rd-party interfaces *206*, *207*
– Injectors *207*
– Video feeds *207*
3rd-party products (compatibility) *206*
3rd-party software *384*
8-meter cable assembly kit *212*

A

Abbreviations *431*
Accessories and detachable parts *189*, *288*
Accessory rail
– Additional table accessory rail *189*
– Table base accessory rail *214*
Accessory rail clamps *197*
Accuracy of dosimetric indications *274*
Acquiring images *81*
– Emergency *91*
– Exposure *89*
– Fluoroscopy *82*
– General workflow *78*
– Multiphase *99*
Adding a study *52*
Additional equipment *208*
Additional filters *355*
Additional FlexSpot *44*, *395*
Additional foot switch *39*
Annotations *135–137*
Anti-scatter grid *256*, *257*, *277*
Anti-virus protection *270*
Applied parts *382*
Archiving *115*
Arm supports *190*
– Arm support board *190*
– Elbow support *190*
– Height-adjustable arm support *191*
– Shoulder support board *193*
Audit trail
– Audit log settings *233*
– Viewing audit logs *262*
Auto wedge follow *89*
Automatic data transfer
– Settings *244*
Automatic exposure control test *260*
Automatic position control
– Customizing *226*

B

Batteries
– Fitting, removing, and disposing *257*
Beam carriers *283*, *286*
– FlexMove *286*
Beam limitation check *260*
Biosense ElectroPhysiology *21*, *115*
BodyGuard
– Collision indicators *409*
– Collision prevention *29*
BodyGuard override *31*
Bolus chase *100*
Bolus Chase Reconstruction *125–127*, *129*
– Contrast series *101*
– Mask series *102*

C

Cable assembly kit (8-meter) *212*
Calibration *146–148*
– XperCT calibration *266*, *267*
Cardio viewpad *419*
Cardiopulmonary resuscitation (CPR) *18*
Cautions and warnings *18*
CBCT (cone beam CT reconstruction *356–360*
CD/DVD
– Enabling and disabling *236*
Ceiling-suspended radiation shield (specifications) *290*
Cerebral filter *193*
Clamps
– Accessory rail clamps *197*
– Tabletop accessory clamps *205*
Cleaning
– Ceiling rails *256*
– System *254*, *255*
Clinical emergency *18*
Collimation *85*, *86*
– Auto wedge follow *89*
Collision indicators *30*
– Quick reference *409*
Collision prevention *29*
– Collision indicators *409*
– Intelligent Collision Protection (iCP) *32*
– Override *31*, *32*
Compatibility *16*, *206*

– Compatibility statements for third-party products *206*
Connections
– Equipment connections *384*
Contacting the manufacturer *388*
Contraindications *17*
Control module *34*, *61*, *413*, *415*
– Orientation *62*
– Positioning/repositioning *61*
– Quick reference *413*, *415*
Control room
– System components *42*
CPR *18*
Customizing the system *215*

D

Date and time
– Format *217*
– Setting the date and time *216*
Default settings *253*
Definitions and terms *424*
– Dose model *428*
– Dose related definitions *426*
Detachable parts and accessories *189*
Detectors *281*
DICOM *237*
– Local settings *238*
– MPPS manager *239*
– Printer settings *241*
– Remote systems *240*
– Worklist management *239*
Disinfecting the system *254*, *255*
Display preferences *229*
Disposing of the system *267*
Doctor side (definition) *425*
Dose model *428*
Dose reports *117*
Drip stand *193*
Dual fluoroscopy *85*

E

Electrical safety *20*
Electromagnetic compatibility (EMC) *22*, *362–364*, *366*, *367*
Electronic Instructions for Use
– Changing the language *15*
– Searching *16*
Electrophysiology *21*, *115*
EMC *22*, *362–364*, *366*, *367*
Emergency access
– Acquiring images *91*
– Enabling and disabling *234*
– Logging on in an emergency *46*, *91*
Emergency power-off *18*
Emergency procedures *18*, *19*
– Clinical emergency *18*
– CPR *18*
– Emergency power-off *18*
– Emergency stop *19*
Emergency stop *19*
Ending a study *116*
Energy consumption (measuring) *267*
Environmental impact of the system *267*
Environmental requirements *271*
Equipment rack *209*
Essential performance of the system *363*
Examination light *280*
Examination room
– System components *27*
Explosion safety *21*
Exporting
– CD/DVD *151*
– Data *149*
– Drag and drop *154*
– Enabling and disabling *236*
– Export protocols *242*
– PACS *153*
– System settings *252*
– USB *149*
Exposure images
– Acquiring *89*

F

Fire safety *21*
Fixed rotational scan *106*
Flagging images *143*
FlexMove *29*, *60*
FlexSpot *44*, *394*
– Additional FlexSpot *44*, *395*
– Managing preset groups *220*
– Managing presets *218*
– Primary monitor *394*
– Secondary monitor *395*
FlexVision *29*, *37*, *395*
– Managing preset groups *220*, *225*
– Managing presets *218*, *222*
– Saving a modified preset *95*
– Screen saver *96*
– Selecting a preset *94*
– Touch screen module *222*, *225*
Fluoroscopy
– Buzzer *84*
– Dual *85*
– Performing fluoroscopy *83*
– Setting the fluoroscopy flavor *82*
– Storing series and images *84*
– Subtraction *103*
Fluoroscopy buzzer
– Resetting *84*
Fluoroscopy images
– Acquiring *82*
Foot end (definition) *425*
Foot switch *37*, *38*
– Additional foot switch *39*
– Wireless foot switch *39*
Free rotational scan *106*

Frequently used functions *382*
Functions
– Frequently used *382*

G

Generator (X-ray) *274*
Geometry *58*
– Locking and unlocking movements *92*
– Positioning the geometry *58*
– Setting up the geometry *58*
Gestures (touch screen module) *398*
Glossary *424*, *431*
– Abbreviations *431*
– Definitions and terms *424*
Grid (anti-scatter) *256*, *257*, *277*
Guidance *17*

H

Hand switch
– Exposure hand switch *40*
– Speed controller *39*
– Swivel hand switch *39*
Hand switches *39*
Handgrip and clamp set *197*
Hazardous substances *25*
Head end (definition) *425*
Head support *195*
Help *17*

I

Image orientation *94*
Images
– Acquiring *81*
– Flagging *143*
– Repositioning *90*
Imaging chain *281*
Importing
– Certificates *238*
– DICOM data *124*
– Enabling and disabling *236*
– From a network *124*
– From USB device, CD, or DVD *124*
– System settings *253*
Injector control methods (definitions) *430*
Injector coupling *98*
– Coupled operation *98*, *431*
– Uncoupled operation *98*, *430*
Injectors *207*
Installation and equipment connections *384*
Instructions for Use
– About *15*
– eIFU *15*
Intelligent Collision Protection (iCP) *32*
Intended use of the system *16*
Intercom *209*
Interventional room pointer *122*
Interventional Tools (Interventional Workspot) *430*
Isocentering *92*
– Recalling the isocenter position *93*
Isokerma maps *353*, *354*

L

Language settings *232*
Laser tool *198*
Log files
– Audit trail *233*
– Viewing audit logs *262*
Logging off *48*
LVA *160*, *169–171*, *173–180*, *183*

M

Mains power failure *47*
– Uninterruptible power supply *47*
Mains power specification *277*
Maintenance *254*, *255*, *258*, *259*, *267*, *268*
– Automatic exposure control test *260*
– Beam limitation check *260*
– Cleaning the system *254*, *255*
– Disinfecting the system *254*, *255*
– Disposing of the system *267*
– Passing the system on to another user *268*
– Planned maintenance program *258*
– User verification test *259*
Malware protection *270*
– Whitelist protection *270*
Managing users *234*
– Adding and deleting users *234*
– Changing a user's password *234*
Manual calibration *146–148*
Manufacturer
– Contacting *388*
Mattress *195*
Measurements *143–146*
Measuring typical energy consumption *267*
Mechanical safety *20*
Medical monitor boom *280*
Monitor ceiling suspension *21*, *62*
– Springarm MCS *280*
Monitor ceiling suspension (specifications) *278–280*
Monitor configuration *36*
Monitors
– FlexSpot *394*, *395*
– FlexVision *29*, *37*
– Switchable monitors *36*, *97*
– Switching only the monitors on *46*
– Test image *266*
Monitors (specifications) *278–280*
Mouse *41*
– Functions *419*
Mouse table *41*
MPPS manager
– Settings *239*
Multiphase acquisition *99*
– Changing settings *99*
MultiSwitch *208*

N

Network connections
– Viewing and testing *261*
Network data *292*
Network safety
– Security and privacy *269*
Neuro wedge *196*
Nurse side (definition) *425*

O

Options
– Equipment rack *209*
– Intercom *209*
– MultiSwitch *208*
– Pedestal *210*
Orientation
– Control module *62*
– Image orientation *94*
– Patient orientation *57*

P

Pan handle *211*
Panel (definition) *424*
Panning
– Zero dose positioning *90*
Parallel working *119*
Passing the system on to another user *268*
Passwords
– Changing your password *215*
– Password policy *234*
– Resetting a user's password *234*
Patient database *49*
Patient orientation *57*
Patient safety
– Radiation *22*
Patient settings *235*
Patient straps *55*
Patient table *33*, *63*
Patient table (specifications) *286*
Pedestal *210*
Peripheral X-ray filters *194*
Physician list *217*
Planned maintenance program *258*
Positioning the geometry
– FlexMove *60*
– Monitor ceiling suspension *62*
– Stand *59*
Positioning the patient *54*
Power specification (mains) *277*
Pre-scan calibration (XperCT) *267*
Preset groups *220*, *225*
Presets *218*, *222*
Previewing images for automatic archiving *115*
Printer settings *231*, *241*
Printing *155*
ProcedureCard groups
– Management *250*
ProcedureCards *51*, *246*
– Copying *249*
– Creating *247*
– Default *247*
– Deleting *250*
– Editing *248*
– Exporting *251*
– Importing *251*
– Mapping RIS codes to ProcedureCards *237*
– Moving *250*
– Restoring factory defaults *251*
Procedures
– Performing procedures *78*
Processing *131–146*
– Annotations *135–137*
– Contrast and brightness *133*, *134*
– Copying images to reference windows *142*
– Cropping images *138*
– Flagging images *143*
– Inverting images *135*
– Landmarking *140*
– Measurements *143–146*
– Panning *132*
– Snapshots *143*
– Subtraction *139*, *140*
– View Trace *141*
– Zooming *132*
Protecting a study *123*

Q

QCA *160*, *162*, *163*, *166–169*
QVA *160*, *162*, *163*, *166–169*

R

Radiation protection *67*
– Radiation shields *67*
Radiation safety *22*, *23*, *67*
– Additional filters *355*
– Stray radiation *353*, *354*
Radiation shields *67*, *290*
– Ceiling-suspended *70*
– Specifications *290*
– Table-mounted *68*
Ratchet compressor *196*
Reference air kerma *302–345*, *347–351*
– Measurement setup *349–351*
Regional settings *232*
– Date and time *217*
– Language *232*
Regulatory information *382*
Regulatory requirements *382*
– Applied parts *382*
Remote assistance *263*
Remote systems
– Settings *240*
Resolving a patient mix *130*
Restarting the system *46*
– Restarting after an emergency power off *48*

– Restarting after an emergency stop *19*
Review module *42*
– Quick reference *417*
Reviewing *119*, *123*
– Parallel working *119*
– Protecting a study *123*
– Reviewing historical data *123*
– Selecting a series for review *119*, *121*
– Using the review monitor *119*
– Using the touch screen module *121*
RIS codes
– Mapping RIS codes to ProcedureCards *237*
Roadmap pro *103*
Room pointer *122*
Rotational scans *105*
– CardiacSwing *110*, *111*
– Fixed rotational scan *106*
– Free rotational scan *106*
– XperCT *107*
– XperCT Dual *109*
RVA *160*, *170*, *171*, *173–180*, *183*

S

Safety *18–23*, *362–364*, *366*, *367*
– Cardiopulmonary resuscitation (CPR) *18*
– Clinical emergency *18*
– Customer Role in the Product Security Partnership *269*
– Electrical grounding *20*
– Electrical safety *20*
– Electromagnetic compatibility (EMC) *22*, *362–364*, *366*, *367*
– Emergency power-off *18*
– Emergency procedures *18*, *19*
– Emergency stop *19*
– Essential performance of the system *363*
– Explosion safety *21*
– Fire safety *21*
– Mechanical safety *20*
– Network safety *269*
– Patient safety *22*, *58*
– Radiation safety *22–24*
– Staff safety *23*, *58*
– Symbols used with the product *18*
– Toxic or hazardous substances *25*
Scheduling
– Editing *53*
– From the worklist *51*
– Manually *52*
Screen saver *96*, *262*
– FlexVision *96*
Search
– Quick search *50*
Secondary circuit outlets *212*
Secure communication *238*
– Local system *238*
Securing the patient with straps *55*
Security *269*
– Certificates *238*
– Changing your password *215*
– Customer responsibilities *269*
– Malware protection *270*
– Patches *270*
– Whitelist protection *270*
Series task *119*, *121*
– Selecting series *119*, *121*
Setting up the geometry *58*
Settings
– Exporting *252*
– Importing *253*
– Restoring default settings *253*
Shutters *85*, *86*
– Touch screen module *86*
Smart BodyGuard override *31*
SmartMask *104*
Software
– Malware protection *270*
– Security patches *270*
– Third-party software *384*
– Updates *264*
– Whitelisting *270*
Source-to-image distance *297*
Speed controller *39*
Springarm monitor ceiling suspension *280*
Staff safety
– Radiation *23*
Stand *28*
– FlexMove *29*
– Locking and unlocking movements *92*
– Positioning *59*
Starting the system *45*
– Logging on in an emergency *46*, *91*
– Switching the system on *45*
Status area *398*, *399*, *402*
– Monoplane system *399*, *402*
– Quick reference *398*, *399*, *402*
Sterile covers *41*, *70*
Stopping the system *45*
– Emergency stop *19*
– Logging off *48*
Storage devices
– Enabling and disabling *236*
Storage requirements *271*
Straps (securing the patient) *55*
Stray radiation *351*, *353*, *354*, *356*
– Additional filters *355*
– Isokerma maps *353*, *354*
– Technique factors *352*
Studies *52*
– Adding a study *52*
– Editing a scheduled study *53*
– Preparing a patient study *49*
– Scheduling a study from the worklist *51*
– Scheduling a study manually *52*
– Starting a study *54*
– Status *49*
Subtraction *103*, *139*, *140*

Switchable monitors *36*, *97*
Symbols
– Customizing *232*
– Measurement *232*
Symbols used with the product *18*
System
– About the system *27*, *383*
System administration *232*
System components
– Control room *42*
– Examination room *27*
System configuration (X-ray) *271*
– Accuracy of dosimetric indications *274*
– Tube output power *273*
System customization *215*
System equipment
– Quick reference *389*
System functions
– Quick reference *389*
System information *383*
– Licenses *216*
System logon
– Enabling automatic system logon *234*
System readiness *81*
System settings influencing radiation dose *292*
System status *81*, *398*, *399*, *402*
– Monoplane status area *399*, *402*
System version *383*

T

Table
– Cradling *64*
– Locking and unlocking movements *92*
– Maximum load *54*
– Pivoting *65*
– Rear interface panels *212*
– Swiveling *67*
– Tilting *64*
– Transferring the patient to the table *54*
Table (specifications) *286*
Table base accessory rail *214*
Table height collision override *32*
Tabletop accessory clamps *205*
Technical support
– Remote assistance *263*
– Saving a log file *263*
– Saving an image *263*
– Saving information *262*
Technique factors *352*
Terms and definitions *424*
Third-party interfaces *206*, *207*
– Injectors *207*
– Video feeds *207*
Third-party products (compatibility) *206*
Third-party software *384*
Toolbars *410*, *412*
– Bolus chase reconstruction *421*, *422*
Tooltips *17*
Touch screen module *35*, *43*, *397*
– Gestures *398*
Toxic substances *25*
Training *17*
Transferring the patient to the table *54*
Transport requirements *271*
Tube output power *273*
Type B applied parts *383*
Typical energy consumption (measuring) *267*

U

Uninterruptible power supply *47*
Updating the system software *264*
USB
– Enabling and disabling *236*
User verification test *259*

V

Verification test (user) *259*
Video feeds (third-party) *207*
Video only
– Switching only the monitors on *46*
Viewing preferences *228*
Viewpad *40*, *419*
– Cardio viewpad *419*
– Vascular viewpad *419*
Viewport (definition) *424*

W

Wall connection box *208*
Wall connection box (specifications) *291*
Warnings and cautions *18*
Wedges *85*, *87*
– Auto wedge follow *89*
– Touch screen module *87*
Whitelist protection *270*
Window (definition) *424*
Wireless foot switch *39*, *201*, *290*
– Charging *204*
– Switching on and off *203*
Workflow
– General acquisition workflow *78*
Workflow settings *235*
Worklist management
– Settings *239*
WorkSpot *389*

X

X-ray
– Enabling X-ray *79*
X-ray generator *274*
X-ray on indicators
– Indication box *79*
– Live images *80*
– Monitor ceiling suspension *80*
– Outside *79*

– Status area *80*
X-ray protocols
– Customizing *228*
X-ray system configuration *271*
– Accuracy of dosimetric indications *274*
– Tube output power *273*
X-ray system controls with OR table *74*
XperCT calibration *266*, *267*
– Pre-scan calibration *267*
XperGuide laser tool *198*, *289*

Z

Zero dose positioning *90*
Zone of occupancy *352*

© Koninklijke Philips N.V., 2018.
All rights are reserved. Reproduction in whole or in part in any form or by any means, electrical, mechanical or otherwise is prohibited without the written consent of the copyright holder.

www.philips.com/healthcare
healthcare@philips.com

Printed in The Netherlands
4523 001 01901 * 2020-07

CE 0344

This Medical Device meets the provisions of the transposition of the Medical Device Directive 93/42/EEC within the country of origin of the Notified Body concerned with the device.

Manufacturer's address
Philips Medical Systems Nederland B.V.
Veenpluis 4-6
5684 PC Best
The Netherlands