DICOM Conformance Statement

IntelliBridge Enterprise B.22

Document ID: 1840908
Document Status: Approved
Document Template ID: SNIP-IOCC-T-3.6.1.02
Document Template version:1.0

- This page is left intentionally empty -

1. DICOM Conformance Statement Overview

Philips IntelliBridge Enterprise (IBE) is the "One Pipe" interoperability solution that enables interoperability between Philips solutions in our customers' environment with a hospital's information systems (i.e. HIS, EMR, LIS).
IBE provides a single, standards-based point of interoperability between Philips clinical systems and enterprise information systems while reducing complexity and cost in the healthcare environment. IntelliBridge Enterprise can also be used to connect with other information systems such as those associated with comparative effectiveness research. Below diagram describes basic overview of IBE server.
DICOM Manager is a system that provides services for checking DICOM connectivity, Query and retrieve capabilities.
MWL SCP and MPPS SCU & SCP support DICOM Modality Worklist Management (MWLM) as a Service Class provider (SCP) and Service Class User (SCU) and DICOM Modality Performed Procedure Step (MPPS) both as a Service Class Provider (SCP) and Service Class User (SCU).
Philips IntelliBridge Enterprise (IBE) acts as a bridge that helps simulate data in a smooth way. IBE does not validate any incoming data, it processes the data and gives the designed outcome.

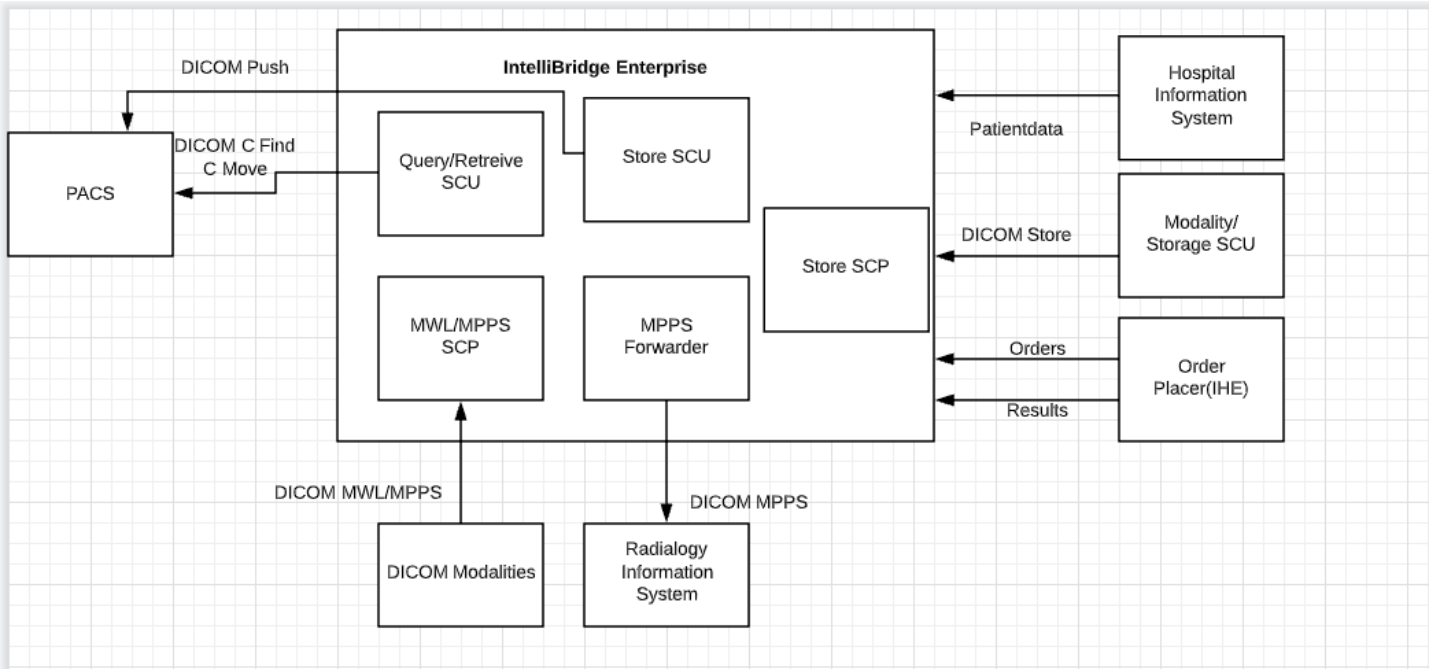

Figure 1: IBE Data flow in Network

Table 1: Network Services

SOP Class		User of Service (SCU)	Provider of Service (SCP)
Name	UID		
Other			
Verification SOP Class	1.2.840.10008.1.1	Yes	Yes
Query/Retrieve			
Patient Root QR Information Model - FIND SOP Class	1.2.840.10008.5.1.4.1.2.1.1	Yes	No
Patient Root QR Information Model - MOVE SOP Class	1.2.840.10008.5.1.4.1.2.1.2	Yes	No
Study Root QR Information Model - FIND SOP Class	1.2.840.10008.5.1.4.1.2.2.1	Yes	No
Study Root QR Information Model - MOVE SOP Class	1.2.840.10008.5.1.4.1.2.2.2	Yes	No

SOP Class		User of Service (SCU)	Provider of Service (SCP)
Name	UID		
Transfer			
Computed Radiography Image Storage SOP Class	1.2.840.10008.5.1.4.1.1.1	Yes	Yes
Digital X-Ray Image Storage – For Presentation SOP Class	1.2.840.10008.5.1.4.1.1.1.1	Yes	Yes
Digital X-Ray Image Storage – For Processing SOP Class	1.2.840.10008.5.1.4.1.1.1.1.1	Yes	Yes
Digital Mammography X-Ray Image Storage – For Presentation SOP Class	1.2.840.10008.5.1.4.1.1.1.2	Yes	Yes
Digital Mammography X-Ray Image Storage – For Processing SOP Class	1.2.840.10008.5.1.4.1.1.1.2.1	Yes	Yes
Digital Intra Oral X-Ray Image Storage – For Presentation SOP Class	1.2.840.10008.5.1.4.1.1.1.3	Yes	Yes
Digital Intra Oral X-Ray Image Storage – For Processing SOP Class	1.2.840.10008.5.1.4.1.1.1.3.1	Yes	Yes
CT Image Storage SOP Class	1.2.840.10008.5.1.4.1.1.2	Yes	Yes
Enhanced CT Image Storage SOP Class	1.2.840.10008.5.1.4.1.1.2.1	Yes	Yes
Hardcopy Grayscale Image Storage SOP Class	1.2.840.10008.5.1.1.29	Yes	Yes
Hardcopy Color Image Storage SOP Class	1.2.840.10008.5.1.1.30	Yes	Yes
Legacy Converted Enhanced CT Image Storage SOP Class	1.2.840.10008.5.1.4.1.1.2.2	Yes	Yes
Ultrasound Multi Frame Image Storage SOP Class (Retired)	1.2.840.10008.5.1.4.1.1.3	Yes	Yes
Ultrasound Multi Frame Image Storage SOP Class	1.2.840.10008.5.1.4.1.1.3.1	Yes	Yes
MR Image Storage SOP Class	1.2.840.10008.5.1.4.1.1.4	Yes	Yes
Enhanced MR Image Storage SOP Class	1.2.840.10008.5.1.4.1.1.4.1	Yes	Yes
MR Spectroscopy Storage SOP Class	1.2.840.10008.5.1.4.1.1.4.2	Yes	Yes
Enhanced MR Color Image Storage SOP Class	1.2.840.10008.5.1.4.1.1.4.3	Yes	Yes
Legacy Converted Enhanced MR Image Storage SOP Class	1.2.840.10008.5.1.4.1.1.4.4	Yes	Yes
Nuclear Medicine Image Storage SOP Class (Retired)	1.2.840.10008.5.1.4.1.1.5	Yes	Yes
Ultrasound Image Storage SOP Class (Retired)	1.2.840.10008.5.1.4.1.1.6	Yes	Yes
Ultrasound Image Storage SOP Class	1.2.840.10008.5.1.4.1.1.6.1	Yes	Yes
Enhanced US Volume Storage SOP Class	1.2.840.10008.5.1.4.1.1.6.2	Yes	Yes
Secondary Capture Image Storage SOP Class	1.2.840.10008.5.1.4.1.1.7	Yes	Yes
Multi Frame Single Bit Secondary Capture Image Storage SOP Class	1.2.840.10008.5.1.4.1.1.7.1	Yes	Yes
Multi Frame Grayscale Byte Secondary Capture Image Storage SOP Class	1.2.840.10008.5.1.4.1.1.7.2	Yes	Yes
Multi Frame Grayscale Word Secondary Capture Image Storage SOP Class	1.2.840.10008.5.1.4.1.1.7.3	Yes	Yes
Multi Frame True Color Secondary Capture Image Storage SOP Class	1.2.840.10008.5.1.4.1.1.7.4	Yes	Yes
Standalone Overlay Storage SOP Class	1.2.840.10008.5.1.4.1.1.8	Yes	Yes

SOP Class		User of Service (SCU)	Provider of Service (SCP)
Name	UID		
Standalone Curve Storage SOP Class	1.2.840.10008.5.1.4.1.1.9	Yes	Yes
Waveform Storage Trial SOP Class	1.2.840.10008.5.1.4.1.1.9.1	Yes	Yes
Twelve Lead ECG Waveform Storage SOP Class	1.2.840.10008.5.1.4.1.1.9.1.1	Yes	Yes
General ECG Waveform Storage SOP Class	1.2.840.10008.5.1.4.1.1.9.1.2	Yes	Yes
Ambulatory ECG Waveform Storage SOP Class	1.2.840.10008.5.1.4.1.1.9.1.3	Yes	Yes
Hemodynamic Waveform Storage SOP Class	1.2.840.10008.5.1.4.1.1.9.2.1	Yes	Yes
Cardiac Electrophysiology Waveform Storage SOP Class	1.2.840.10008.5.1.4.1.1.9.3.1	Yes	Yes
Basic Voice Audio Waveform Storage SOP Class	1.2.840.10008.5.1.4.1.1.9.4.1	Yes	Yes
General Audio Waveform Storage	1.2.840.10008.5.1.4.1.1.9.4.2	Yes	Yes
Arterial Pulse Waveform Storage SOP Class	1.2.840.10008.5.1.4.1.1.9.5.1	Yes	Yes
Respiratory Waveform Storage SOP Class	1.2.840.10008.5.1.4.1.1.9.6.1	Yes	Yes
Standalone Modality LUT Storage SOP Class	1.2.840.10008.5.1.4.1.1.10	Yes	Yes
Standalone VOILUT Storage SOP Class	1.2.840.10008.5.1.4.1.1.11	Yes	Yes
Grayscale Softcopy Presentation State Storage SOP Class	1.2.840.10008.5.1.4.1.1.11.1	Yes	Yes
Color Softcopy Presentation State Storage SOP Class	1.2.840.10008.5.1.4.1.1.11.2	Yes	Yes
Pseudo Color Softcopy Presentation State Storage SOP Class	1.2.840.10008.5.1.4.1.1.11.3	Yes	Yes
Blending Softcopy Presentation State Storage SOP Class	1.2.840.10008.5.1.4.1.1.11.4	Yes	Yes
XA-XRF Grayscale Softcopy Presentation State Storage SOP Class	1.2.840.10008.5.1.4.1.1.11.5	Yes	Yes
Grayscale Planar MPR Volumetric Presentation State Storage SOP Class	1.2.840.10008.5.1.4.1.1.11.6	Yes	Yes
Compositing Planar MPR Volumetric Presentation State Storage SOP Class	1.2.840.10008.5.1.4.1.1.11.7	Yes	Yes
Advanced Blending Presentation State Storage SOP Class	1.2.840.10008.5.1.4.1.1.11.8	Yes	Yes
Volume Rendering Volumetric Presentation State Storage SOP Class	1.2.840.10008.5.1.4.1.1.11.9	Yes	Yes
Segmented Volume Rendering Volumetric Presentation State Storage SOP Class	1.2.840.10008.5.1.4.1.1.11.10	Yes	Yes
Multiple Volume Rendering Volumetric Presentation State Storage SOP Class	1.2.840.10008.5.1.4.1.1.11.11	Yes	Yes
X-Ray Angiographic Image Storage SOP Class	1.2.840.10008.5.1.4.1.1.12.1	Yes	Yes
Enhanced XA Image Storage SOP Class	1.2.840.10008.5.1.4.1.1.12.1.1	Yes	Yes
X-Ray Radiofluoroscopic Image Storage SOP Class	1.2.840.10008.5.1.4.1.1.12.2	Yes	Yes
Enhanced XRF Image Storage SOP Class	1.2.840.10008.5.1.4.1.1.12.2.1	Yes	Yes
X-Ray Angiographic Bi Plane Image Storage SOP Class	1.2.840.10008.5.1.4.1.1.12.3	Yes	Yes
X-Ray 3D Angiographic Image Storage SOP Class	1.2.840.10008.5.1.4.1.1.13.1.1	Yes	Yes
X-Ray 3D Craniofacial Image Storage SOP Class	1.2.840.10008.5.1.4.1.1.13.1.2	Yes	Yes
Breast Tomosynthesis Image Storage SOP Class	1.2.840.10008.5.1.4.1.1.13.1.3	Yes	Yes

SOP Class		User of Service (SCU)	Provider of Service (SCP)
Name	UID		
Breast Projection X-Ray Image Storage – For Presentation SOP Class	1.2.840.10008.5.1.4.1.1.13.1.4	Yes	Yes
Breast Projection X-Ray Image Storage – For Processing SOP Class	1.2.840.10008.5.1.4.1.1.13.1.5	Yes	Yes
Intravascular Optical Coherence Tomography Image Storage – For Presentation SOP Class	1.2.840.10008.5.1.4.1.1.14.1	Yes	Yes
Intravascular Optical Coherence Tomography Image Storage – For Processing SOP Class	1.2.840.10008.5.1.4.1.1.14.2	Yes	Yes
Parametric Map Storage SOP Class	1.2.840.10008.5.1.4.1.1.30	Yes	Yes
MR Image Storage Zero Padded SOP Class (Retired)	1.2.840.10008.5.1.4.1.1.40	Yes	Yes
Raw Data Storage SOP Class	1.2.840.10008.5.1.4.1.1.66	Yes	Yes
Spatial Registration Storage SOP Class	1.2.840.10008.5.1.4.1.1.66.1	Yes	Yes
Spatial Fiducials Storage SOP Class	1.2.840.10008.5.1.4.1.1.66.2	Yes	Yes
Deformable Spatial Registration Storage SOP Class	1.2.840.10008.5.1.4.1.1.66.3	Yes	Yes
Segmentation Storage SOP Class	1.2.840.10008.5.1.4.1.1.66.4	Yes	Yes
Surface Segmentation Storage SOP Class	1.2.840.10008.5.1.4.1.1.66.5	Yes	Yes
Tractography Results Storage SOP Class	1.2.840.10008.5.1.4.1.1.66.6	Yes	Yes
Real World Value Mapping Storage SOP Class	1.2.840.10008.5.1.4.1.1.67	Yes	Yes
Surface Scan Mesh Storage SOP Class	1.2.840.10008.5.1.4.1.1.68.1	Yes	Yes
Surface Scan Point Cloud Storage SOP Class	1.2.840.10008.5.1.4.1.1.68.2	Yes	Yes
VL Image Storage Trial SOP Class	1.2.840.10008.5.1.4.1.1.77.1	Yes	Yes
VL Multi Frame Image Storage Trial SOP Class	1.2.840.10008.5.1.4.1.1.77.2	Yes	Yes
VL Endoscopic Image Storage SOP Class	1.2.840.10008.5.1.4.1.1.77.1.1	Yes	Yes
Video Endoscopic Image Storage SOP Class	1.2.840.10008.5.1.4.1.1.77.1.1.1	Yes	Yes
VL Microscopic Image Storage SOP Class	1.2.840.10008.5.1.4.1.1.77.1.2	Yes	Yes
Video Microscopic Image Storage SOP Class	1.2.840.10008.5.1.4.1.1.77.1.2.1	Yes	Yes
VL Slide Coordinates Microscopic Image Storage SOP Class	1.2.840.10008.5.1.4.1.1.77.1.3	Yes	Yes
VL Photographic Image Storage SOP Class	1.2.840.10008.5.1.4.1.1.77.1.4	Yes	Yes
Video Photographic Image Storage SOP Class	1.2.840.10008.5.1.4.1.1.77.1.4.1	Yes	Yes
Ophthalmic Photography 8 Bit Image Storage SOP Class	1.2.840.10008.5.1.4.1.1.77.1.5.1	Yes	Yes
Ophthalmic Photography 16 Bit Image Storage SOP Class	1.2.840.10008.5.1.4.1.1.77.1.5.2	Yes	Yes
Stereometric Relationship Storage SOP Class	1.2.840.10008.5.1.4.1.1.77.1.5.3	Yes	Yes
Ophthalmic Tomography Image Storage SOP Class	1.2.840.10008.5.1.4.1.1.77.1.5.4	Yes	Yes
Wide Field Ophthalmic Photography Stereographic Projection Image Storage SOP Class	1.2.840.10008.5.1.4.1.1.77.1.5.5	Yes	Yes
Wide Field Ophthalmic Photography 3D Coordinates Image Storage SOP Class	1.2.840.10008.5.1.4.1.1.77.1.5.6	Yes	Yes

SOP Class		User of Service (SCU)	Provider of Service (SCP)
Name	UID		
Ophthalmic Optical Coherence Tomography En Face Image Storage SOP Class	1.2.840.10008.5.1.4.1.1.77.1.5.7	Yes	Yes
Ophthalmic Optical Coherence Tomography B-scan Volume Analysis Storage SOP Class	1.2.840.10008.5.1.4.1.1.77.1.5.8	Yes	Yes
VL Whole Slide Microscopy Image Storage SOP Class	1.2.840.10008.5.1.4.1.1.77.1.6	Yes	Yes
Lensometry Measurements Storage SOP Class	1.2.840.10008.5.1.4.1.1.78.1	Yes	Yes
Autorefraction Measurements Storage SOP Class	1.2.840.10008.5.1.4.1.1.78.2	Yes	Yes
Keratometry Measurements Storage SOP Class	1.2.840.10008.5.1.4.1.1.78.3	Yes	Yes
Subjective Refraction Measurements Storage SOP Class	1.2.840.10008.5.1.4.1.1.78.4	Yes	Yes
Visual Acuity Measurements Storage SOP Class	1.2.840.10008.5.1.4.1.1.78.5	Yes	Yes
Spectacle Prescription Report Storage SOP Class	1.2.840.10008.5.1.4.1.1.78.6	Yes	Yes
Ophthalmic Axial Measurements Storage SOP Class	1.2.840.10008.5.1.4.1.1.78.7	Yes	Yes
Intraocular Lens Calculations Storage SOP Class	1.2.840.10008.5.1.4.1.1.78.8	Yes	Yes
Macular Grid Thickness and Volume Report Storage SOP Class	1.2.840.10008.5.1.4.1.1.79.1	Yes	Yes
Ophthalmic Visual Field Static Perimetry Measurements Storage SOP Class	1.2.840.10008.5.1.4.1.1.80.1	Yes	Yes
Ophthalmic Thickness Map Storage SOP Class	1.2.840.10008.5.1.4.1.1.81.1	Yes	Yes
Corneal Topography Map Storage SOP Class	1.2.840.10008.5.1.4.1.1.82.1	Yes	Yes
Text SR Storage Trial SOP Class	1.2.840.10008.5.1.4.1.1.88.1	Yes	Yes
Audio SR Storage Trial SOP Class	1.2.840.10008.5.1.4.1.1.88.2	Yes	Yes
Detail SR Storage Trial SOP Class	1.2.840.10008.5.1.4.1.1.88.3	Yes	Yes
Comprehensive SR Storage Trial SOP Class	1.2.840.10008.5.1.4.1.1.88.4	Yes	Yes
Basic Text SR Storage SOP Class	1.2.840.10008.5.1.4.1.1.88.11	Yes	Yes
Enhanced SR Storage SOP Class	1.2.840.10008.5.1.4.1.1.88.22	Yes	Yes
Comprehensive SR Storage SOP Class	1.2.840.10008.5.1.4.1.1.88.33	Yes	Yes
Comprehensive 3D SR Storage SOP Class	1.2.840.10008.5.1.4.1.1.88.34	Yes	Yes
Extensible SR Storage SOP Class	1.2.840.10008.5.1.4.1.1.88.35	Yes	Yes
Procedure Log Storage SOP Class	1.2.840.10008.5.1.4.1.1.88.40	Yes	Yes
Mammography CAD SR Storage SOP Class	1.2.840.10008.5.1.4.1.1.88.50	Yes	Yes
Key Object Selection Document Storage SOP Class	1.2.840.10008.5.1.4.1.1.88.59	Yes	Yes
Chest CAD SR Storage SOP Class	1.2.840.10008.5.1.4.1.1.88.65	Yes	Yes
X-Ray Radiation Dose SR Storage SOP Class	1.2.840.10008.5.1.4.1.1.88.67	Yes	Yes
Radiopharmaceutical Radiation Dose SR Storage SOP Class	1.2.840.10008.5.1.4.1.1.88.68	Yes	Yes
Colon CAD SR Storage SOP Class	1.2.840.10008.5.1.4.1.1.88.69	Yes	Yes
Implantation Plan SR Storage SOP Class	1.2.840.10008.5.1.4.1.1.88.70	Yes	Yes
Acquisition Context SR Storage SOP Class	1.2.840.10008.5.1.4.1.1.88.71	Yes	Yes
Simplified Adult Echo SR Storage SOP Class	1.2.840.10008.5.1.4.1.1.88.72	Yes	Yes

SOP Class		User of Service (SCU)	Provider of Service (SCP)
Name	UID		
Patient Radiation Dose SR Storage SOP Class	1.2.840.10008.5.1.4.1.1.88.73	Yes	Yes
Content Assessment Results Storage SOP Class	1.2.840.10008.5.1.4.1.1.90.1	Yes	Yes
Encapsulated PDF Storage SOP Class	1.2.840.10008.5.1.4.1.1.104.1	Yes	Yes
Encapsulated CDA Storage SOP Class	1.2.840.10008.5.1.4.1.1.104.2	Yes	Yes
Encapsulated STL Storage SOP Class	1.2.840.10008.5.1.4.1.1.104.3	Yes	Yes
Positron Emission Tomography Image Storage SOP Class	1.2.840.10008.5.1.4.1.1.128	Yes	Yes
Legacy Converted Enhanced PET Image Storage SOP Class	1.2.840.10008.5.1.4.1.1.128.1	Yes	Yes
Standalone PET Curve Storage SOP Class	1.2.840.10008.5.1.4.1.1.129	Yes	Yes
Enhanced PET Image Storage SOP Class	1.2.840.10008.5.1.4.1.1.130	Yes	Yes
Basic Structured Display Storage SOP Class	1.2.840.10008.5.1.4.1.1.131	Yes	Yes
CT Defined Procedure Protocol Storage SOP Class	1.2.840.10008.5.1.4.1.1.200.1	Yes	Yes
CT Performed Procedure Protocol Storage SOP Class	1.2.840.10008.5.1.4.1.1.200.2	Yes	Yes
Protocol Approval Storage SOP Class	1.2.840.10008.5.1.4.1.1.200.3	Yes	Yes
RT Image Storage SOP Class	1.2.840.10008.5.1.4.1.1.481.1	Yes	Yes
RT Dose Storage SOP Class	1.2.840.10008.5.1.4.1.1.481.2	Yes	Yes
RT Structure Set Storage SOP Class	1.2.840.10008.5.1.4.1.1.481.3	Yes	Yes
RT Beams Treatment Record Storage SOP Class	1.2.840.10008.5.1.4.1.1.481.4	Yes	Yes
RT Plan Storage SOP Class	1.2.840.10008.5.1.4.1.1.481.5	Yes	Yes
RT Brachy Treatment Record Storage SOP Class	1.2.840.10008.5.1.4.1.1.481.6	Yes	Yes
RT Treatment Summary Record Storage SOP Class	1.2.840.10008.5.1.4.1.1.481.7	Yes	Yes
RT Ion Plan Storage SOP Class	1.2.840.10008.5.1.4.1.1.481.8	Yes	Yes
RT Ion Beams Treatment Record Storage SOP Class	1.2.840.10008.5.1.4.1.1.481.9	Yes	Yes
RT Beams Delivery Instruction Storage Trial SOP Class	1.2.840.10008.5.1.4.34.1	Yes	Yes
RT Beams Delivery Instruction Storage SOP Class	1.2.840.10008.5.1.4.34.7	Yes	Yes
RT Brachy Application Setup Delivery Instruction Storage SOP Class	1.2.840.10008.5.1.4.34.10	Yes	Yes
Hanging Protocol Storage SOP Class	1.2.840.10008.5.1.4.38.1	Yes	Yes
Color Palette Storage SOP Class	1.2.840.10008.5.1.4.39.1	Yes	Yes
Generic Implant Template Storage SOP Class	1.2.840.10008.5.1.4.43.1	Yes	Yes
Implant Assembly Template Storage SOP Class	1.2.840.10008.5.1.4.44.1	Yes	Yes
Implant Template Group Storage SOP Class	1.2.840.10008.5.1.4.45.1	Yes	Yes
Stored Print Storage SOP Class (Retired)	1.2.840.10008.5.1.1.27	Yes	Yes
Workflow Management			
Modality Performed Procedure Step SOP Class	1.2.840.10008.3.1.2.3.3	Yes	Yes
Modality Worklist Information Model - FIND SOP Class	1.2.840.10008.5.1.4.31	No	Yes
Instance Availability Notification SOP Class	1.2.840.10008.5.1.4.33	No	Yes

2. Table of Contents

1. DICOM CONFORMANCE STATEMENT OVERVIEW ... 3
2. TABLE OF CONTENTS ... 9
3. INTRODUCTION ... 12
3.1. REVISION HISTORY ... 12
3.2. AUDIENCE ... 12
3.3. REMARKS ... 12
3.4. DEFINITIONS, TERMS AND ABBREVIATIONS ... 13
3.5. REFERENCES ... 14
4. NETWORKING ... 15
4.1. IMPLEMENTATION MODEL ... 15
4.1.1. Application Data Flow ... 15
4.1.2. Functional Definition of AE's ... 15
4.1.2.1. Functional Definition of Query Retrieve as SCU AE ... 16
4.1.2.2. Functional Definition of MWL AE and MPPS AE ... 16
4.1.2.3. Functional Definition of IAN AE ... 16
4.1.3. Sequencing of Real World Activities ... 16
4.2. AE SPECIFICATIONS ... 16
4.2.1. Query Retrieve as SCU AE ... 16
4.2.1.1. SOP Classes ... 16
4.2.1.2. Association Policies ... 17
4.2.1.2.1. General ... 17
4.2.1.2.2. Number of Associations ... 17
4.2.1.2.3. Implementation Identifying Information ... 17
4.2.1.2.4. Communication Failure Handling ... 17
4.2.1.3. Association Initiation Policy ... 18
4.2.1.3.1. (Real-World) Activity – Verification as SCU ... 19
4.2.1.3.2. (Real-World) Activity – FIND as SCU ... 20
4.2.1.3.3. (Real-World) Activity – MOVE as SCU ... 26
4.2.1.4. Association Acceptance Policy ... 29
4.2.2. MWL AE ... 29
4.2.2.1. SOP Classes ... 29
4.2.2.2. Association Policies ... 29
4.2.2.2.1. General ... 29
4.2.2.2.2. Number of Associations ... 29
4.2.2.2.3. Implementation Identifying Information ... 29
4.2.2.2.4. Communication Failure Handling ... 30
4.2.2.3. Association Acceptance Policy ... 30
4.2.2.3.1. (Real-World) Activity – Verification as SCP ... 32
4.2.2.3.2. (Real-World) Activity – Modality Worklist as SCP ... 33
4.2.3. MPPS AE ... 37
4.2.3.1. SOP Classes ... 37
4.2.3.2. Association Policies ... 37
4.2.3.2.1. General ... 37
4.2.3.2.2. Number of Associations ... 37
4.2.3.2.3. Asynchronous Nature ... 38
4.2.3.2.4. Implementation Identifying Information ... 38
4.2.3.2.5. Communication Failure Handling ... 38
4.2.3.3. Association Initiation Policy ... 38
4.2.3.3.1. (Real-World) Activity – Modality Performed Procedure Step as SCU ... 40
4.2.3.4. Association Acceptance policy ... 44
4.2.3.4.1. (Real-World) Activity – Verification as SCP ... 44
4.2.3.4.2. (Real-World) Activity – Modality Performed Procedure Step as SCP ... 46

4.2.4. Storage AE ... 47
4.2.4.1. SOP Classes ... 48
4.2.4.2. Association Policies ... 52
4.2.4.2.1. General ... 52
4.2.4.2.2. Number of Associations ... 53
4.2.4.2.3. Asynchronous Nature ... 53
4.2.4.2.4. Implementation Identifying Information ... 53
4.2.4.2.5. Communication Failure Handling ... 53
4.2.4.3. Association Initiation Policy ... 54
4.2.4.3.1. (Real-World) Activity – Image Export ... 57
4.2.4.4. Association Acceptance Policy ... 76
4.2.4.4.1. (Real-World) Activity – Image Import ... 78
4.2.5. IAN AE ... 97
4.2.5.1. SOP Classes ... 97
4.2.5.2. Association Policies ... 97
4.2.5.2.1. General ... 97
4.2.5.2.2. Number of Associations ... 97
4.2.5.2.3. Implementation Identifying Information ... 98
4.2.5.2.4. Communication Failure Handling ... 98
4.2.5.3. Association Acceptance Policy ... 98
4.2.5.3.1. (Real-World) Activity – Instance Availability Notification as SCP ... 98
4.3. NETWORK INTERFACES ... 100
4.3.1. Physical Network Interfaces ... 100
4.3.2. Additional Protocols ... 100
4.4. CONFIGURATION ... 101
4.4.1. AE Title/Presentation Address Mapping ... 101
4.4.1.1. Local AE Titles ... 101
4.4.1.2. Remote AE Title/Presentation Address Mapping ... 101
4.4.2. Parameters ... 102
5. MEDIA INTERCHANGE ... 104
6. SUPPORT OF CHARACTER SETS ... 105
7. SECURITY ... 106
7.1. SECURITY PROFILES ... 106
7.1.1. Security use Profiles ... 106
7.1.2. Security Transport Connection Profiles ... 106
7.1.3. Digital Signature Profiles ... 107
7.1.4. Media Storage Security Profiles ... 108
7.1.5. Attribute Confidentiality Profiles ... 108
7.1.6. Network Address Management Profiles ... 108
7.1.7. Time Synchronization Profiles ... 108
7.1.8. Application Configuration Management Profiles ... 108
7.1.9. Audit Trail Profiles ... 108
7.2. ASSOCIATION LEVEL SECURITY ... 108
7.3. APPLICATION LEVEL SECURITY ... 108
8. ANNEXES FOR "PDF_REPORT" CREATION ... 109
8.1. IOD CONTENTS ... 109
8.1.1. Created SOP Instance ... 109
8.1.1.1. List of created SOP Classes ... 109
8.1.1.2. Encapsulated PDF Storage SOP Class ... 110
8.1.2. Usage of Attributes from Received IOD ... 112
8.1.3. Attribute Mapping ... 112
8.1.4. Coerced/Modified fields ... 112

8.2. DATA DICTIONARY OF PRIVATE ATTRIBUTES 112
8.3. CODED TERMINOLOGY AND TEMPLATES 112
8.3.1. Context Groups 112
8.3.2. Template Specifications 112
8.3.3. Private code definitions 112
8.4. GRAYSCALE IMAGE CONSISTENCY 112
8.5. STANDARD EXTENDED/SPECIALIZED/PRIVATE SOPS 112
8.6. PRIVATE TRANSFER SYNTAXES 112

3. Introduction

The introduction specifies product and relevant disclaimers as well as any general information that the vendor feels is appropriate.

3.1. Revision History

The revision history provides dates and differences of the different releases.

Table 2: Revision History

Document Version	Date of Issue	Description of change
01	12-Dec-2024	First Release Version for IBE B.22

3.2. Audience

This Conformance Statement is intended for:

- (Potential) customers
- System integrators of medical equipment
- Marketing staff interested in system functionality
- Software designers implementing DICOM interfaces

It is assumed that the reader is familiar with the DICOM standard.

3.3. Remarks

The DICOM Conformance Statement is contained in chapter 4 through 8 and follows the contents and structuring requirements of DICOM PS 3.2.
This DICOM Conformance Statement by itself does not guarantee successful interoperability of Philips equipment with non-Philips equipment. The user (or user's agent) should be aware of the following issues:

- **Interoperability**
  Interoperability refers to the ability of application functions, distributed over two or more systems, to work successfully together. The integration of medical devices into an IT environment may require application functions that are not specified within the scope of DICOM. Consequently, using only the information provided by this Conformance Statement does not guarantee interoperability of Philips equipment with non-Philips equipment.
  It is the user's responsibility to analyze thoroughly the application requirements and to specify a solution that integrates Philips equipment with non-Philips equipment.

- **Validation**
  Philips equipment has been carefully tested to ensure that the actual implementation of the DICOM interface corresponds with this Conformance Statement.
  Where Philips equipment is linked to non-Philips equipment, the first step is to compare the relevant Conformance Statements. If the Conformance Statements indicate that successful information exchange should be possible, additional validation tests will be necessary to ensure the functionality, performance, accuracy and stability of image and image related data. It is the responsibility of the user (or user's agent) to specify the appropriate test suite and to carry out the additional validation tests.

- **New versions of the DICOM Standard**
  The DICOM Standard will evolve in future to meet the user's growing requirements and to incorporate new features and technologies. Philips is actively involved in this evolution and plans to adapt its equipment to future versions of the DICOM Standard. In order to do so, Philips reserves the right to make changes to its products or to discontinue its delivery. The user should ensure that any non-Philips provider linking to Philips equipment also adapts to future versions of the DICOM Standard. If not, the incorporation of DICOM enhancements into Philips equipment may lead to loss of connectivity (in case of networking) and incompatibility (in case of media).

3.4. Definitions, Terms and Abbreviations

Table 3: Definitions, Terms and Abbreviations

Abbreviation/Term	Explanation
AE	Application Entity
ANSI	American National Standard Institute
AP	Application Profile
BOT	Basic Offset Table
CD	Compact Disc
CD-R	CD-Recordable
CD-M	CD-Medical
CR	Computed Radiography
CT	Computed Tomography
DCR	Dynamic Cardio Review
DICOM	Digital Imaging and Communications in Medicine
DIMSE	DICOM Message Service Element
DIMSE-C	DIMSE-Composite
DIMSE-N	DIMSE-Normalized
DX	Digital X-Ray
ELE	DICOM Explicit VR Little Endian
FSC	File-set Creator
FSR	File-set Reader
FSU	File-set Updater
GUI	Graphic User Interface
HIS	Hospital Information System
HL7	Health Level Seven
ILE	DICOM Implicit VR Little Endian
IOD	Information Object Definition
ISIS	Information System - Imaging System
MOD	Magneto-Optical Disk
MPPS	Modality Performed Procedure Step
MR	Magnetic Resonance
NEMA	National Electrical Manufacturers Association

Abbreviation/Term	Explanation
NM	Nuclear Medicine
PDU	Protocol Data Unit
RF	X-Ray Radiofluoroscopic
RIS	Radiology Information System
RT	Radiotherapy
RWA	Real-World Activity
SC	Secondary Capture
SCM	Study Component Management
SCP	Service Class Provider
SCU	Service Class User
SOP	Service Object Pair
TCP/IP	Transmission Control Protocol/Internet Protocol
UID	Unique Identifier
US	Ultrasound
USMF	Ultrasound Multi-frame
WLM	Worklist Management
XA	X-Ray Angiographic

3.5. References

[DICOM] Digital Imaging and Communications in Medicine, Parts 1 - 22 (NEMA PS 3.1- PS 3.22),
National Electrical Manufacturers Association
1300 North 17th Street
Suite 900
Arlington, Virginia 22209
Internet: https://www.dicomstandard.org/current

4. Networking

This section contains the networking related services (vs. the media related ones).

4.1. Implementation model

The implementation model consists of three sections:

- The application data flow diagram, specifying the relationship between the Application Entities and the "external world" or Real-World Activities,
- A functional description of each Application Entity, and
- The sequencing constraints among them.

4.1.1. Application Data Flow

As part of the implementation model, an application data flow diagram is included. This diagram represents all of the Application Entities present in an implementation, and graphically depicts the relationship of the AE's use of DICOM to Real-World Activities as well as any applicable user interaction.

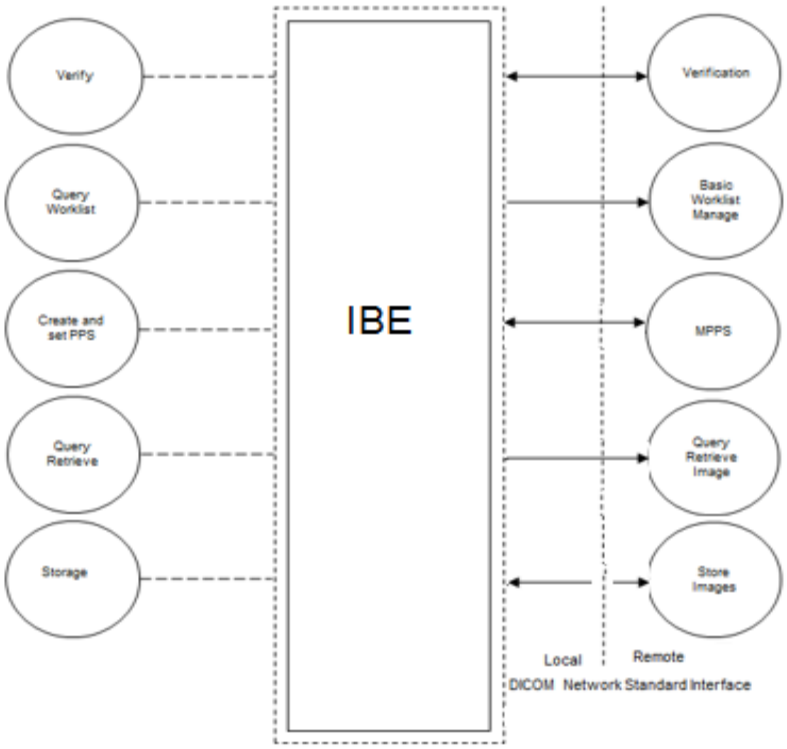

Figure 2: Application Data Flow Diagram

4.1.2. Functional Definition of AE's

This section contains a functional definition for each individual local Application Entity.

4.1.2.1. Functional Definition of Query Retrieve as SCU AE

IntelliBridge Enterprise (SCU) initiates an association on event, initiated by the user, with a remote DICOM AE (SCP) to send a Query/Retrieve request (DICOM Storage Service Class).

4.1.2.2. Functional Definition of MWL AE and MPPS AE

MWL SCP and MPPS SCU & SCP implements a DICOM Service Class Provider (SCP) for the Verification, Basic Worklist Management and for the Modality Performed Procedure Step SOP Class. These SCP's entire are contained within a single Application Entity. The same Application Entity can also act as DICOM Service Class Users (SCU) for the Modality Performed Procedure Step SOP Class (MPPS Forwarding).

4.1.2.3. Functional Definition of IAN AE

IntelliBridge Enterprise (SCP) responds to an association on event, DICOM Study export, initiated by a remote DICOM AE (SCU) to send a create response and the applicable instance data (DICOM Instance Availability Notification SOP Class).

4.1.3. Sequencing of Real World Activities

All Real-World Activities as specified in the Functional Definition of Application Entities may occur independently from each other.
MWL SCP and MPPS SCU & SCP does not require any specific sequence of activities.
Modalities are setup in such a way that the requests for MWLM updates are issued at regular intervals. Moreover, the user may press a button on the modality console to refresh the modality worklist instantaneously.
Regarding the MPPS service, the modality has to comply with the normal sequence as defined in the DICOM standard. An MPPS-Created message should be followed by an MPPS-In Progress and/or a MPPS-Completed/Discontinued message type.

4.2. AE Specifications

This section in the DICOM Conformance Statement is a set of Application Entity specifications. There are as many of these subsections as there are different AE's in the implementation.

4.2.1. Query Retrieve as SCU AE

Details of this specific Application Entity is specified in this section.

4.2.1.1. SOP Classes

The Query/Retrieve SCU AE is used for sending Query/Retrieve requests to remote system. The Query/Retrieve SCU AE makes use of the following DICOM functions:
- Query / Retrieve SCU, which uses C-ECHO as service element.
- Query as SCU, which uses C-FIND as service element.
- Retrieve as SCU, which uses C-MOVE as service element.

IntelliBridge Enterprise does not have storage AE. It only triggers the retrieve operation using C-MOVE. The actual retrieval of DICOM Instances (images, objects) is always handled by another DICOM node.
This Application Entity provides Standard Conformance to the following SOP Classes.

Table 4: SOP Classes for Query Retrieve as SCU AE

SOP Class Name	SOP Class UID	SCU	SCP
Verification SOP Class	1.2.840.10008.1.1	Yes	No
Study Root QR Information Model - FIND SOP Class	1.2.840.10008.5.1.4.1.2.2.1	Yes	No
Study Root QR Information Model - MOVE SOP Class	1.2.840.10008.5.1.4.1.2.2.2	Yes	No
Patient Root QR Information Model - FIND SOP Class	1.2.840.10008.5.1.4.1.2.1.1	Yes	No
Patient Root QR Information Model - MOVE SOP Class	1.2.840.10008.5.1.4.1.2.1.2	Yes	No

Note: Any SOP specific behavior is documented later in the conformance statement in the applicable SOP specific conformance section.

4.2.1.2. Association Policies

Each AE specification contains a description of the general association establishment and acceptance policies of the AE.

4.2.1.2.1. General

The DICOM standard application context is specified below.

Table 5: DICOM Application Context

Description	Value
Application Context Name	1.2.840.10008.3.1.1.1

4.2.1.2.2. Number of Associations

The number of simultaneous associations that an Application Entity may support as an Initiator or Acceptor is specified here.

Table 6: Number of associations as an Association Initiator for this AE

Description	Value
Maximum number of simultaneous associations	4

4.2.1.2.3. Implementation Identifying Information

The value supplied for Implementation Class UID and version name are documented here.

Table 7: DICOM Implementation Class and Version for Query Retrieve as SCU AE

Implementation Class UID	1.2.40.0.13.1.3
Implementation Version Name	dcm4che-5.30.0

4.2.1.2.4. Communication Failure Handling

The behavior of the AE during communication failure is summarized in the next table.

Table 8: Communication Failure Behavior

Exception	Behavior
ARTIM Timeout	The association is released, and the reason is logged.

4.2.1.3. Association Initiation Policy

The Application Entity will respond on a received reject Association attempt as shown in next table.

Table 9: Association Rejection response

Result	Source	Reason/Diagnosis	Behavior
1 - rejected-permanent	1 - DICOM UL service-user	1 - no-reason-given	The user is informed. Details are logged in central log file.
		2 - application-context-name-not supported	The user is informed. Details are logged in central log file.
		3 - calling-AE-title-not-recognized	The user is informed. Details are logged in central log file.
		7 - called-AE-title-not-recognized	The user is informed. Details are logged in central log file.
	2 - DICOM UL service-provider (ACSE related function)	1 - no-reason-given	The user is informed. Details are logged in central log file.
		2 - protocol-version-not-supported	The user is informed. Details are logged in central log file.
	3 - DICOM UL service-provider (Presentation related function)	1 - temporary-congestion	The user is informed. Details are logged in central log file.
		2 - local-limit-exceeded	The user is informed. Details are logged in central log file.
2 - rejected-transient	1 - DICOM UL service-user	1 - no-reason-given	The user is informed. Details are logged in central log file.
		2 - application-context-name-not-supported	The user is informed. Details are logged in central log file.
		3 - calling-AE-title-not-recognized	The user is informed. Details are logged in central log file.
		7 - called-AE-title-not-recognized	The user is informed. Details are logged in central log file.
	2 - DICOM UL service-provider (ACSE related function)	1 - no-reason-given	The user is informed. Details are logged in central log file.
		2 - protocol-version-not-supported	The user is informed. Details are logged in central log file.
	3 - DICOM UL service-provider (Presentation related function)	1 - temporary-congestion	The user is informed. Details are logged in central log file.
		2 - local-limit-exceeded	The user is informed. Details are logged in central log file.

The behavior of the AE on receiving an association abort is summarized in the next table.

Table 10: Association Abort Handling

Source	Reason/Diagnosis	Behavior
0 - DICOM UL service-user (initiated abort)	0 - reason-not-specified	When received, terminates the connection and logs the event.
2 - DICOM UL service-provider (initiated abort)	0 - reason-not-specified	When received, terminates the connection and logs the event.
	1 - unrecognized-PDU	When received, terminates the connection and logs the event.
	2 - unexpected-PDU	When received, terminates the connection and logs the event.
	4 - unrecognized-PDU-parameter	When received, terminates the connection and logs the event.
	5 - unexpected-PDU-parameter	When received, terminates the connection and logs the event.
	6 - invalid-PDU-parameter-value	When received, terminates the connection and logs the event.

4.2.1.3.1. (Real-World) Activity – Verification as SCU

4.2.1.3.1.1. Description and Sequencing of Activities

As defined the Network AE acts as a Verification SCP for any Remote SCU as Verification SCU.

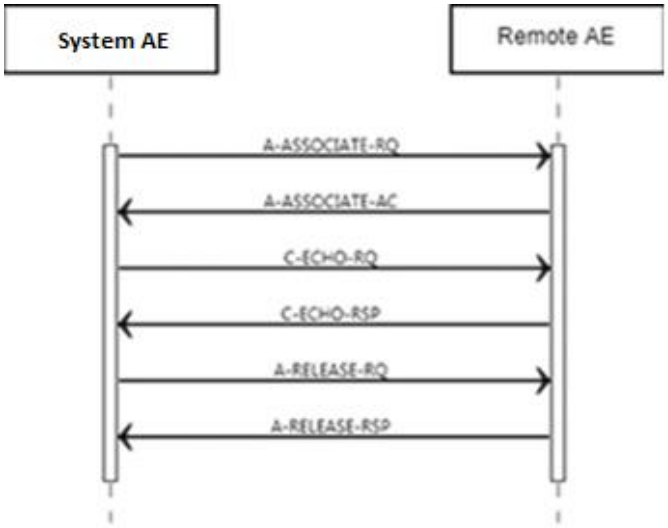

Figure 3: (Real World) Activity - Verification as SCU

4.2.1.3.1.2. Proposed Presentation Contexts

The presentation contexts are defined in the next table.

Table 11: Proposed Presentation Contexts for (Real-World) Activity – Verification as SCU

Presentation Context Table					
Abstract Syntax		Transfer Syntax		Role	Extended Negotiation
Name	UID	Name List	UID List		
Verification SOP Class	1.2.840.10008.1.1	Implicit VR Little Endian	1.2.840.10008.1.2	SCU	None

Note: No extended negotiations supported by IntelliBridge Enterprise Network AE.

4.2.1.3.1.3. SOP Specific Conformance for Verification SOP Class

This section and sub-section include the manufacturer SOP and Dataset specific information as well the status codes and their corresponding behavior.

4.2.1.3.1.3.1. Dataset Specific Conformance for Verification C-ECHO SCU

Details regarding the Dataset Specific response behavior will be reported in this section.

This part of the section includes the dataset specific behavior, i.e. error codes, error and exception handling, time-outs, etc.

IntelliBridge Enterprise does not process C-ECHO-RSP

4.2.1.3.2. (Real-World) Activity – FIND as SCU

4.2.1.3.2.1. Description and Sequencing of Activities

The Query/Retrieve as SCU AE initiates associations to other systems that support the Study Root Query/Retrieve C-FIND service.

Normal flow of events for C-FIND:

1. The user selects criteria's where to query on and after that, IntelliBridge Enterprise sets up a connection with the selected external DICOM node.
2. Based on query results, the user selected one or more entries to be retrieved. The retrieve request will be sent to the remote DICOM node.
3. In response, the external DICOM node returns (0 or more) query results in the form of a list of studies that meet the search criteria entered earlier by the clinical user. The user selects the studies to retrieve from the external DICOM node.
4. When the requested instances are stored, the remote host closes the connection with IntelliBridge Enterprise.

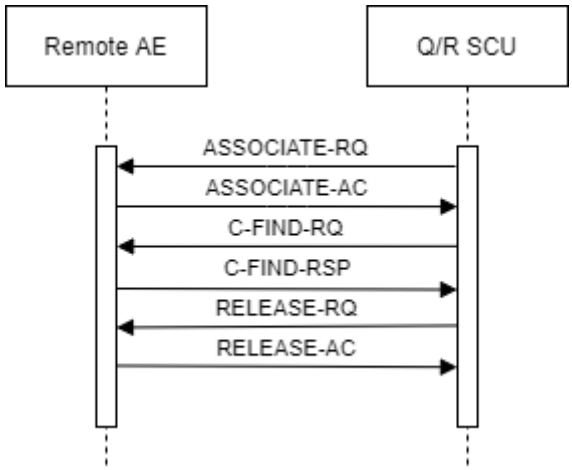

Figure 4: (Real World) Activity - FIND As SCU

Normal flow of events for C-MOVE:

1. Based on query results, one or more entries can be retrieved.
2. IntelliBridge Enterprise sets up a request connection with the external DICOM node that provided the query results and negotiates communication parameters.
3. IntelliBridge Enterprise sends a retrieve request to the external DICOM node. The external DICOM node sets up a store connection with the Store SCP. Connection set up take place and is only accepted by the Store SCP, if the Query/Retrieve SCU has an open retrieve connection with the external DICOM node. Meanwhile it is possible to send C-MOVE-RSP PENDING to the IntelliBridge Enterprise server.
4. The external DICOM node sends over the requested DICOM instance data.
5. The connection will be closed by IntelliBridge Enterprise.

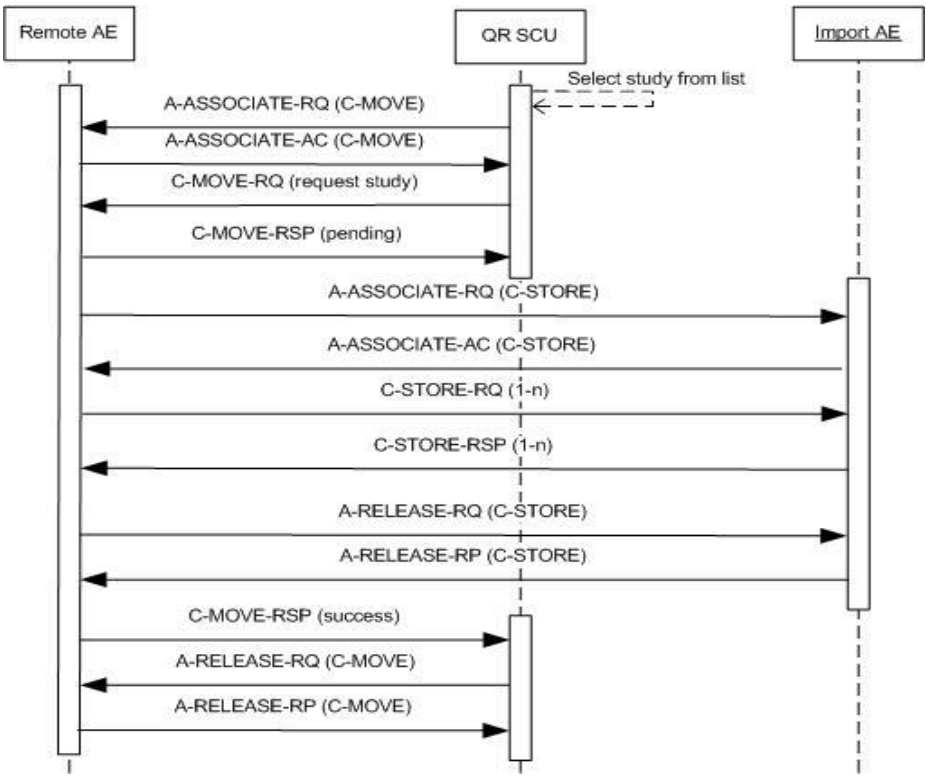

Figure 5: Flow diagram Retrieve DICOM image data from external DICOM node.

4.2.1.3.2.2. Proposed Presentation Contexts

The presentation contexts are defined in the next table.

Table 12: Proposed Presentation Contexts for (Real-World) Activity – FIND As SCU

Presentation Context Table					
Abstract Syntax		Transfer Syntax		Role	Extended Negotiation
Name	UID	Name List	UID List		
Patient Root QR Information Model - FIND SOP Class	1.2.840.10008.5.1.4.1.2.1.1	Explicit VR Little Endian	1.2.840.10008.1.2.1	SCU	None
		Implicit VR Little Endian	1.2.840.10008.1.2		
Study Root QR Information Model - FIND SOP Class	1.2.840.10008.5.1.4.1.2.2.1	Explicit VR Little Endian	1.2.840.10008.1.2.1	SCU	None
		Implicit VR Little Endian	1.2.840.10008.1.2		

4.2.1.3.2.3. SOP Specific Conformance for Patient Root QR Information Model - FIND SOP Class

This section and sub-section include the manufacturer SOP and Dataset specific information as well the status codes and their corresponding behavior.
Patient, Study, Series and Image level queries are supported.

The Query/Retrieve as SCU AE supports queries based on the combination of the following attributes and attribute matching types (as defined in [DICOM] PS 3.4).

4.2.1.3.2.3.1. Dataset Specific Conformance for Patient Root QR Information Model - FIND SOP Class C-FIND-SCU

Details regarding the Dataset Specific response behavior will be reported in this section.

Table 13: Supported Query Keys for Patient Root Information Model

Patient Root Information Model				
Attribute Name	**Tag**	**VR**	**Type of Matching**	**Comment**
Query/Retrieve Level	0008,0052	CS		-
Specific Character Set	0008,0005	CS		-
Q/R Patient level				
Patient's Name	0010,0010	PN	Single Value, Universal, WildCard,	-
Patient ID	0010,0020	LO	Single Value, Universal, WildCard	-
Issuer of patient ID	0010,0021	LO	Single Value, Universal, WildCard	-
Patient’s Birth date	0010,0030	DA	Single Value, Universal, WildCard	-
Patient Sex	0010,0040	CS	Single Value, Universal, WildCard	-
Q/R Study level				
StudyInstanceUID	0020,000D	UI	Single Value, Universal, WildCard	-
StudyID	0020,0010	SM	Single Value, Universal, WildCard	-
StudyDate	0008,0020	DA	Single Value, Universal	-
StudyTime	0008,0030	TM	Single Value, Universal	-
Accession Number	0008,0050	SH	Single Value, Universal, WildCard	-
Referring Physician name	0008,0090	PN	Single Value, Universal, WildCard	-
Q/R Series level				
SeriesInstanceUID	0020,000E	UI	Single Value, Universal, WildCard	-
Series Number	0020,0011	IS	Single Value, Universal, WildCard	-
Modality	0008,0060	CS	Single Value, Universal, WildCard	-
Q/R Image level				
SOP InstanceUID	0008,0018	UI	Single Value, Universal, WildCard	-

IntelliBridge Enterprise does not report an error if any required key/unique key is missing in the query response.

This part of the section includes the dataset specific behavior, i.e. error codes, error and exception handling, time-outs, etc.

Table 14: DICOM command response status handling behavior

Service Status	Error Code	Further Meaning	Behavior
Success	0000	Matching is complete	Continue, Log.
Refused	A700	Refused – Out of resources	Log; Release association.
Failed	A900	Error – Identifier does not match SOP class	Log; Release association.
	C001	Error – Unable to process	Log; Release association.
	A801	Refused – Out of resources	Log; Release association
Cancel	FE00	Matching terminated due to cancel request	Log; Release association.
Pending	FF00	Matches are continuing – current match is supplied and any optional keys were supported in the same manner as required keys	Continue
	FF01	Matches are continuing – warning that one or more optional keys were not supported for existence and/or matching for this identifier	Continue

Table 15: DICOM Command Communication Failure Behavior

Exception	Behavior
Timeout	The association is released and the reason is logged.
Association aborted	The association is released and the reason is logged.

4.2.1.3.2.4. SOP Specific Conformance for Study Root QR Information Model - FIND SOP Class

This section and sub-section include the manufacturer SOP and Dataset specific information as well the status codes and their corresponding behavior.

Study, Series and Image level queries are supported.

The Query/Retrieve as SCU AE supports queries based on the combination of the following attributes and attribute matching types (as defined in [DICOM] PS 3.4).

4.2.1.3.2.4.1. Dataset Specific Conformance for Study Root QR Information Model - FIND SOP Class C-FIND-SCU

Details regarding the Dataset Specific response behavior will be reported in this section.

Table 16: Supported Query Keys for Study Root Information Model

Study Root Information Model				
Attribute Name	**Tag**	**VR**	**Type of Matching**	**Comment**
Query/Retrieve Level	0008,0052	CS		-
Specific Character Set	0008,0005	CS		-
Q/R Study level				
Patient's Name	0010,0010	PN	Single Value, Universal, WildCard,	-
Patient ID	0010,0020	LO	Single Value, Universal, WildCard	-
Issuer of patient ID	0010,0021	LO	Single Value, Universal, WildCard	-

Patient's Birth date	0010,0030	DA	Single Value, Universal, WildCard	-
Patient Sex	0010,0040	CS	Single Value, Universal, WildCard	-
StudyInstanceUID	0020,000D	UI	Single Value, Universal, WildCard	-
StudyID	0020,0010	SM	Single Value, Universal, WildCard	-
StudyDate	0008,0020	DA	Single Value, Universal	-
StudyTime	0008,0030	TM	Single Value, Universal	-
Accession Number	0008,0050	SH	Single Value, Universal, WildCard	-
Referring Physician name	0008,0090	PN	Single Value, Universal, WildCard	-
Q/R Series level				
SeriesInstanceUID	0020,000E	UI	Single Value, Universal, WildCard	-
Series Number	0020,0011	IS	Single Value, Universal, WildCard	-
Modality	0008,0060	CS	Single Value, Universal, WildCard	-
Q/R Image level				
SOP InstanceUID	0008,0018	UI	Single Value, Universal, WildCard	-

IntelliBridge Enterprise does not report an error if any required key/unique key is missing in the query response.

This part of the section includes the dataset specific behavior, i.e. error codes, error and exception handling, time-outs, etc.

Table 17: DICOM command response status handling behavior

Service Status	Error Code	Further Meaning	Behavior
Success	0000	Matching is complete	Continue, Log.
Refused	A700	Refused – Out of resources	Log; Release association.
Failed	A900	Error – Identifier does not match SOP class	Log; Release association.
	C001	Error – Unable to process	Log; Release association.
Cancel	FE00	Matching terminated due to cancel request	Log; Release association.
Pending	FF00	Matches are continuing – current match is supplied and any optional keys were supported in the same manner as required keys	Continue
	FF01	Matches are continuing – warning that one or more optional keys were not supported for existence and/or matching for this identifier	Continue

Table 18: DICOM Command Communication Failure Behavior

Exception	Behavior
Timeout	The association is released and the reason is logged.
Association aborted	The association is released and the reason is logged.

4.2.1.3.3. (Real-World) Activity – MOVE as SCU

4.2.1.3.3.1. Description and Sequencing of Activities

The Query/Retrieve as SCU AE initiates associations to other systems that support the Study Root Query/Retrieve C-MOVE service.
For C-MOVE request, the destination is always another DICOM node.

4.2.1.3.3.2. Proposed Presentation Contexts

The presentation contexts are defined in the next table.

Table 19: Proposed Presentation Contexts for (Real-World) Activity – MOVE As SCU

Presentation Context Table					
Abstract Syntax		Transfer Syntax		Role	Extended Negotiation
Name	UID	Name List	UID List		
Patient Root QR Information Model - MOVE SOP Class	1.2.840.10008.5.1.4.1.2.1.2	Explicit VR Little Endian	1.2.840.10008.1.2.1	SCU	None
		Implicit VR Little Endian	1.2.840.10008.1.2		
Study Root QR Information Model - MOVE SOP Class	1.2.840.10008.5.1.4.1.2.2.2	Explicit VR Little Endian	1.2.840.10008.1.2.1	SCU	None
		Implicit VR Little Endian	1.2.840.10008.1.2		

4.2.1.3.3.3. SOP Specific Conformance for Patient Root QR Information Model - MOVE SOP Class

This section and sub-section include the manufacturer SOP and Dataset specific information as well the status codes and their corresponding behavior.

Patient, Study, Series and Image level queries are supported. The Query/Retrieve as SCU AE supports queries based on the combination of the following (Patient level) attributes and attribute matching types (as defined in [DICOM] PS 3.4).

4.2.1.3.3.3.1. Dataset Specific Conformance for Patient Root QR Information Model - MOVE SOP Class C-MOVE-SCU

Details regarding the Dataset Specific response behavior will be reported in this section.

Table 20: Identifiers for MOVE PatientRoot Information Model as SCU

Patient Root Information Model			
Attribute Name	Tag	VR	Comment
Query/Retrieve Level	0008,0052	CS	PATIENT, STUDY, SERIES or IMAGE
Q/R Patient level			
Patient ID	0010,0020	LO	-
Q/R Study level			
Study Instance UID	0020,000D	UI	-

Q/R Series level			
Series Instance UID	0020,000E	UI	-
Q/R Image level			
SOP Instance UID	0008,0018	UI	-

This part of the section includes the dataset specific behavior, i.e. error codes, error and exception handling, time-outs, etc.

Table 21: DICOM command response status handling behavior

Service Status	Error Code	Further Meaning	Behavior
Success	0000	Sub-operations complete – no failures	Continue.
Refused	A700	Refused – Out of resources	Log; Release association.
Failed	A900	Error – Identifier does not match SOP class	Log; Release association.
	C001	Error – Unable to process	Log; Release association.
	A701	Refused: Out of Resources – Unable to calculate number of matches	Log; Release association.
Warning	B000	Sub-operations complete – one or more failures	The SCP has retrieved all requested images. Release association.
Cancel	FE00	Sub-operations terminated due to cancel request	Log; Release association.
Pending	FF00	Sub-operations are continuing	Continue.
	FF01	Sub-operations are continuing	Continue.

Exceptions:

1. At any point in time, an error occurs in the network or on the external DICOM node; IntelliBridge Enterprise will close the connection and report an error
2. If an error occurs during data transfer, IntelliBridge Enterprise will close the connection and report an error
3. If an error occurs on de external DICOM node while setting up the connection, IntelliBridge Enterprise will abort all actions related to that connection and report an error.

Table 22: DICOM Command Communication Failure Behavior

Exception	Behavior
Timeout	The association is released and the reason is logged.
Association aborted	The association is released and the reason is logged.

4.2.1.3.3.4. SOP Specific Conformance for Study Root QR Information Model - MOVE SOP Class

This section and sub-section include the manufacturer SOP and Dataset specific information as well the status codes and their corresponding behavior.

Study, Series and Image level queries are supported. The Query/Retrieve as SCU AE supports queries based on the combination of the following (Study level) attributes and attribute matching types (as defined in [DICOM] PS 3.4).

4.2.1.3.3.4.1. Dataset Specific Conformance for Study Root QR Information Model - MOVE SOP Class C-MOVE-SCU

Details regarding the Dataset Specific response behavior will be reported in this section.

Table 23: Identifiers for MOVE Study Root Information Model as SCU

Study Root Information Model			
Attribute Name	**Tag**	**VR**	**Comment**
Query/Retrieve Level	0008,0052	CS	STUDY, SERIES or IMAGE
Q/R Study level			
Study Instance UID	0020,000D	UI	-
Q/R Series level			
Series Instance UID	0020,000E	UI	-
Q/R Image level			
SOP Instance UID	0008,0018	UI	-

This part of the section includes the dataset specific behavior, i.e. error codes, error and exception handling, time-outs, etc.

Table 24: DICOM command response status handling behavior

Service Status	Error Code	Further Meaning	Behavior
Success	0000	Sub-operations complete – no failures	Continue.
Refused	A700	Refused – Out of resources	Log; Release association.
Failed	A900	Error – Identifier does not match SOP class	Log; Release association.
	C001	Error – Unable to process	Log; Release association.
	A701	Refused: Out of Resources – Unable to calculate number of matches	Log; Release association.
Warning	B000	Sub-operations complete – one or more failures	The SCP has retrieved all requested images. Release association.
Cancel	FE00	Sub-operations terminated due to cancel request	Log; Release association.
Pending	FF00	Sub-operations are continuing	Continue.
	FF01	Sub-operations are continuing	Continue.

Exceptions:

1. At any point in time, an error occurs in the network or on the external DICOM node; IntelliBridge Enterprise will close the connection and report an error
2. If an error occurs during data transfer, IntelliBridge Enterprise will close the connection and report an error
3. If an error occurs on de external DICOM node while setting up the connection, IntelliBridge Enterprise will abort all actions related to that connection and report an error.

Table 25: DICOM Command Communication Failure Behavior

Exception	Behavior
Timeout	The association is released and the reason is logged.
Association aborted	The association is released and the reason is logged.

4.2.1.4. Association Acceptance Policy

Not applicable, the Query/Retrieve SCU AE doesn't accept any associations from other DICOM nodes.

4.2.2. MWL AE

Details of this specific Application Entity is specified in this section.

4.2.2.1. SOP Classes

This Application Entity provides Standard Conformance to the following SOP Classes.

Table 26: SOP Classes for MWL AE

SOP Class Name	SOP Class UID	SCU	SCP
Verification SOP Class	1.2.840.10008.1.1	No	Yes
Modality Worklist Information Model - FIND SOP Class	1.2.840.10008.5.1.4.31	No	Yes

Note: Any SOP specific behavior is documented later in the conformance statement in the applicable SOP specific conformance section.

4.2.2.2. Association Policies

Each AE specification contains a description of the general association establishment and acceptance policies of the AE.

4.2.2.2.1. General

The DICOM standard application context is specified below.

Table 27: DICOM Application Context

Description	Value
Application Context Name	1.2.840.10008.3.1.1.1

4.2.2.2.2. Number of Associations

The number of simultaneous associations that an Application Entity may support as an Acceptor is specified here.

Table 28: Number of associations as an Association Acceptor for this AE

Description	Value
Maximum number of simultaneous associations	4

4.2.2.2.3. Implementation Identifying Information

The value supplied for Implementation Class UID and version name are documented here.

Table 29: DICOM Implementation Class and Version for MWL AE

Implementation Class UID	1.2.40.0.13.1.3
Implementation Version Name	dcm4che-5.30.0

4.2.2.2.4. Communication Failure Handling

The behavior of the AE during communication failure is summarized in the next table.

Table 30: Communication Failure Behavior

Exception	Behavior
Timeout	IntelliBridge Enterprise considers an ARTIM Timeout of 5 seconds as a communication failure
Association aborted	Error message is output to the Service Log.
Failed to connect	Error message is output to the Service Log.

4.2.2.3. Association Acceptance Policy

The behavior of this Application Entity is summarized in the next Table.

Table 31: Response Status Handler Behavior

Service Status	Error Code	Further Meaning	Triggering condition
Success	0000	e.g. Matching is complete	When there is a match
Refused	A700	Out of Resources	When association is refused due to unavailability of resources
Failure	C000	Unable to process	When the system is unable to process the request.
Pending	FF00	Current match is supplied	When the current match is sent and there are more matched elements to be sent
Cancel	FE00	Matching terminated due to Cancel Request	When the matching is stopped after getting the cancel request

The Application Entity will respond to a received Association rejection as shown in the next table.

Table 32: Association Rejection response

Result	Source	Reason/Diagnosis	Behavior
1 - rejected-permanent	1 - DICOM UL service-user	1 - no-reason-given	The user is informed. Details are logged in central log file.
		2 - application-context-name-not supported	The user is informed. Details are logged in central log file.
		3 - calling-AE-title-not-recognized	The user is informed. Details are logged in central log file.
		7 - called-AE-title-not-recognized	The user is informed. Details are logged in central log file.
	2 - DICOM UL service-provider	1 - no-reason-given	The user is informed. Details are logged in central log file.

Result	Source	Reason/Diagnosis	Behavior
	(ACSE related function)	2 - protocol-version-not-supported	The user is informed. Details are logged in central log file.
	3 - DICOM UL service-provider (Presentation related function)	1 - temporary-congestion	The user is informed. Details are logged in central log file.
		2 - local-limit-exceeded	The user is informed. Details are logged in central log file.
2 - rejected-transient	1 - DICOM UL service-user	1 - no-reason-given	The user is informed. Details are logged in central log file.
		2 - application-context-name-not-supported	The user is informed. Details are logged in central log file.
		3 - calling-AE-title-not-recognized	The user is informed. Details are logged in central log file.
		7 - called-AE-title-not-recognized	The user is informed. Details are logged in central log file.
	2 - DICOM UL service-provider (ACSE related function)	1 - no-reason-given	The user is informed. Details are logged in central log file.
		2 - protocol-version-not-supported	The user is informed. Details are logged in central log file.
	3 - DICOM UL service-provider (Presentation related function)	1 - temporary-congestion	The user is informed. Details are logged in central log file.
		2 - local-limit-exceeded	The user is informed. Details are logged in central log file.

The behavior of the AE on receiving an Association abort is summarized in the next table.

Table 33: Association Abort Handling

Source	Reason/Diagnosis	Behavior
0 - DICOM UL service-user (initiated abort)	0 - reason-not-specified	When received, terminates the connection and logs the event.
2 - DICOM UL service-provider (initiated abort)	0 - reason-not-specified	When received, terminates the connection and logs the event.
	1 - unrecognized-PDU	When received, terminates the connection and logs the event.
	2 - unexpected-PDU	When received, terminates the connection and logs the event.
	4 - unrecognized-PDU-parameter	When received, terminates the connection and logs the event.
	5 - unexpected-PDU-parameter	When received, terminates the connection and logs the event.
	6 - invalid-PDU-parameter-value	When received, terminates the connection and logs the event.

4.2.2.3.1. (Real-World) Activity – Verification as SCP

4.2.2.3.1.1. Description and Sequencing of Activities

The MWL AE receives application level communication using the C-ECHO command.

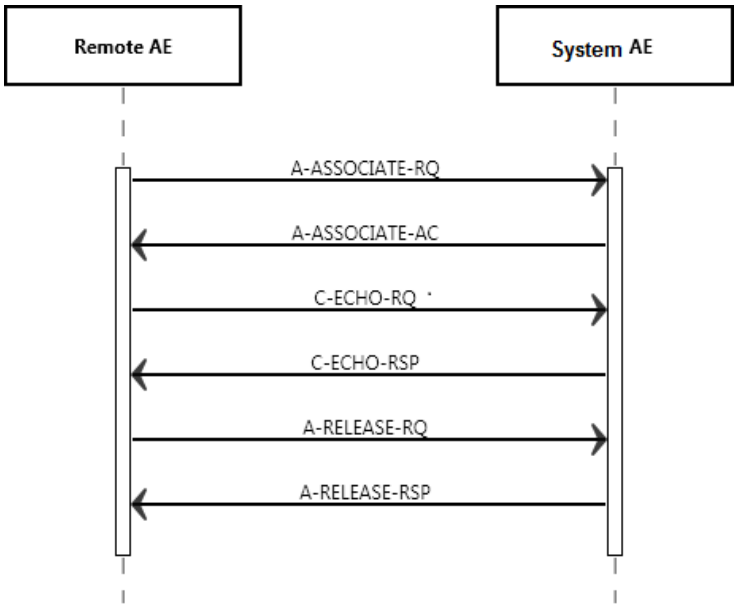

Figure 6: (Real World) Activity - Verification as SCP

4.2.2.3.1.2. Proposed Presentation Contexts

The presentation contexts are defined in the next table.

Table 34: Proposed Presentation Contexts for (Real-World) Activity – Verification as SCP

Presentation Context Table					
Abstract Syntax		Transfer Syntax		Role	Extended Negotiation
Name	UID	Name List	UID List		
Verification SOP Class	1.2.840.10008.1.1	Explicit VR Little Endian	1.2.840.10008.1.2.1	SCP	None
		Implicit VR Little Endian	1.2.840.10008.1.2		

4.2.2.3.1.3. SOP Specific Conformance for Verification SOP Class

The MWL AE provides standard conformance to Verification SOP Class.

Table 35: Status Response

Service Status	Error Code	Further Meaning	Triggering Condition
Success	0000	Matching is complete	When the matching elements are found and supplied
Failure	xxxx	Any failure	Triggered by different system error scenarios

Table 36: DICOM Command Communication Failure Behavior

Exception	Description
REPLAY TIMEOUT	Reason will be logged
ASSOCIATION ABORTED	Reason will be logged
ASSOCIATION TIMEOUT	Reason will be logged

4.2.2.3.2. (Real-World) Activity – Modality Worklist as SCP

4.2.2.3.2.1. Description and Sequencing of Activities

MWL SCP accepts associations from systems that wish to have an up-to-date Modality Worklist using the C-FIND Service Element.

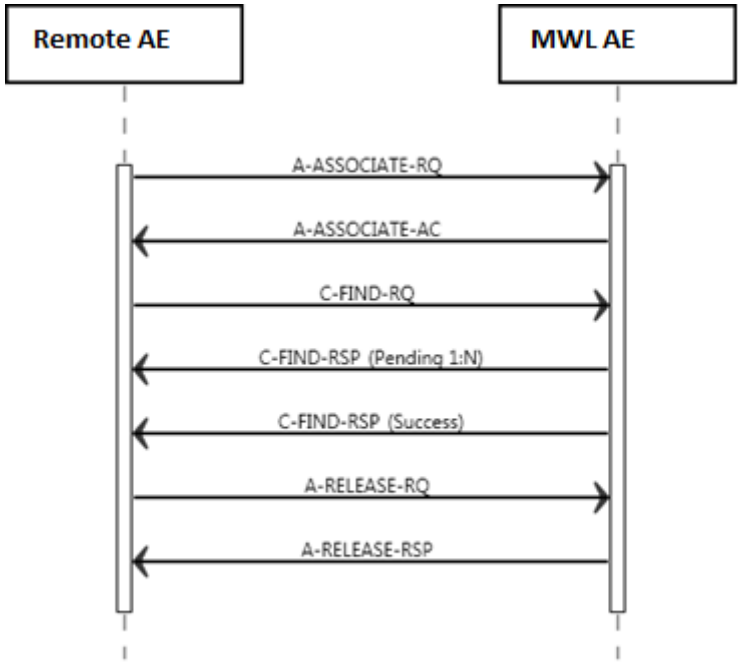

Figure 7: (Real World) Activity - Modality Worklist as SCP

4.2.2.3.2.2. Accepted Presentation Contexts

MWL SCP will accept the presentation contexts as given in the table below.

Table 37: Acceptable Presentation Contexts for (Real-World) Activity – Modality worklist as SCP

Presentation Context Table					
Abstract Syntax		Transfer Syntax		Role	Extended Negotiation
Name	UID	Name List	UID List		
Modality Worklist Information Model - C-FIND SOP Class	1.2.840.10008.5.1.4.31	Explicit VR Little Endian	1.2.840.10008.1.2.1	SCP	None
		Implicit VR Little Endian	1.2.840.10008.1.2		

4.2.2.3.2.3. SOP Specific Conformance for Modality Worklist Information Model C-FIND SOP Class

This section and sub-section includes the manufacturer SOP and Dataset specific information as well as the status codes and their corresponding behavior.

4.2.2.3.2.3.1. Dataset Specific Conformance for Modality Worklist Information Model C-FIND SCP

The supported C-Find request keys and the DICOM command communication behavior are shown in the following tables. The standard as well as the specific status codes and their corresponding behavior are also specified.

Table 38: Modality Worklist Return keys supported

Attribute Name	Tag	VR	Remark/ Comment	Matching Key Supported	Return Key Supported
SOP Common Module					
Specific Character Set	0008,0005	CS	Configurable. Default is ISO_IR100	N	Y
Timezone Offset From UTC	0008,0201	SH		Y	N
Patient Identification Module					
Patient's Name	0010,0010	PN	Returns Value. Type of Matching:S,*,U	Y	Y
Patient ID	0010,0020	LO	Returns Value. Type of Matching:S,*,U	Y	Y
Issuer of Patient ID	0010,0021	LO	Returns value. Type of Matching :S,*,U	Y	Y
Patient Demographic Module					
Patient's Birth Date	0010,0030	DA		Y	Y
Patient's Sex	0010,0040	CS	Returns value. Type of Matching :S,U	Y	Y
Patient’s Size	0010,1020	DS	Returns value.	N	Y
Patient's Weight	0010,1030	DS	Returns value.	N	Y
Confidentiality Constraint on Patient Data Description	0040,3001	LO	Returns Empty	N	Y

Attribute Name	Tag	VR	Remark/ Comment	Matching Key Supported	Return Key Supported
Patient Medical Module					
Medical Alerts	0010,2000	LO	Returns Empty	N	Y
Contrast Allergies	0010,2110	LO	Returns Empty	N	Y
Pregnancy Status	0010,21C0	US	Returns Empty	N	Y
Special Needs	0038,0050	LO	Returns Empty	N	Y
Patient State	0038,0500	LO	Returns Empty	N	Y
Visit Relationship Module					
Referenced Patient Sequence	0008,1120	SQ	Sequence is returned empty	N/A	Y
> Referenced SOP Class UID	0008,1150	UI		N	N
> Referenced SOP Instance UID	0008,1155	UI		N	N
Visit Identification Module					
Admission ID	0038,0010	LO	Returns Empty	N	Y
Visit Status Module					
Current Patient Location	0038,0300	LO	Returns Value	N	Y
Visit Status ID	0038,0008	CS	Returns value.	N	Y
Scheduled Procedure Step Module					
Scheduled Procedure Step Sequence	0040,0100	SQ	The Attributes of the Scheduled Procedure Step shall only be retrieved with Sequence Matching. The Scheduled Procedure Step Sequence shall contain only a single Item.	N/A	N/A
> Modality	0008,0060	CS	Returns Value. Type of Matching :S,U.	Y	Y
> Scheduled Station AE Title	0040,0001	AE	Mapped in Rhapsody Table ModalityExamCode_Mapping	Y	Y
> Scheduled Procedure Step Start Date	0040,0002	DA	SPS Time matching only supported when SPS Date is provided as matching key	Y	Y
> Scheduled Procedure Step Start Time	0040,0003	TM		Y	Y
> Scheduled Performing Physician's Name	0040,0006	PN		Y	Y
> Scheduled Procedure Step Description	0040,0007	LO		N	Y
> Scheduled Protocol Code Sequence	0040,0008	SQ		N/A	Y
>> Code Value	0008,0100	SH		Y	Y
>> Coding Scheme Designator	0008,0102	SH		N	Y
>> Code Meaning	0008,0104	LO		N	Y

Attribute Name	Tag	VR	Remark/ Comment	Matching Key Supported	Return Key Supported
> Scheduled Procedure Step ID	0040,0009	SH		N	Y
> Scheduled Station Name	0040,0010	SH	Copied from Scheduled Station AE Title.	N	Y
> Scheduled Procedure Step Location	0040,0011	SH	Returns Empty	N	Y
> Scheduled Procedure Step Status	0040,0020	CS	Currently, only one value supported is “SCHEDULED”.	N	Y
Requested Procedure Module					
Referenced Study Sequence	0008,1110	SQ	Returns Empty	N/A	Y
> Referenced SOP Class UID	0008,1150	UI	1.2.840.10008.3.1.2.3.1	N	N
> Referenced SOP Instance UID	0008,1155	UI		N	N
Study Instance UID	0020,000D	UI		N	Y
Requested Procedure Description	0032,1060	LO		Y	Y
Requested Procedure Code Sequence	0032,1064	SQ		N/A	Y
> Code Value	0008,0100	SH		N	Y
> Coding Scheme Designator	0008,0102	SH		N	Y
> Code Meaning	0008,0104	LO		N	Y
Requested Procedure ID	0040,1001	SH	Returns Value. Type of Matching: S,U	Y	Y
Reason for the Requested Procedure	0040,1002	LO		N	Y
Requested Procedure Priority	0040,1003	SH	Returns Empty	N	Y
Patient Transport Arrangements	0040,1004	LO	Returns Empty	N	Y
Imaging Service Request Module					
Accession Number	0008,0050	SH		Y	Y
Referring Physician's Name	0008,0090	PN	Returns the value. Type of Matching : S,U.	Y	Y
Requesting Physician	0032,1032	PN	Returns Empty	N	Y

Notes:

Keys that are specified in the C-FIND-RQ but are not supported by the MWL AE and are type 2 or 3 are returned empty.

Table 39: Status Response

Service Status	Error Code	Further Meaning	Behavior
Success	0000	Matching is complete	A response is sent with this status code.
Refused	A700	Out of Resources	A response is sent with this status code. Reason is Logged and released association.

Service Status	Error Code	Further Meaning	Behavior
Failure	C000	Unable to process	A response is sent with this status code. The reason is logged in the file.
Pending	FF00	Current match is supplied	Matches are continuing; Current match is supplied.
Cancel	FE00	Matching terminated due to Cancel Request	No more C-FIND pending responses will be sent and a final response with this status code is sent. Cancel request is logged.

Table 40: Communication Failure Behavior

Exception	Behavior
Timeout	The association is released and the reason is logged
Association Aborted	The association is released and the reason is logged

4.2.3. MPPS AE

Details of this specific Application Entity is specified in this section.

4.2.3.1. SOP Classes

This Application Entity provides Standard Conformance to the following SOP Classes.

Table 41: SOP Classes for MPPS AE

SOP Class Name	SOP Class UID	SCU	SCP
Verification SOP Class	1.2.840.10008.1.1	No	Yes
Modality Performed Procedure Step SOP Class	1.2.840.10008.3.1.2.3.3	Yes	Yes

Note: Any SOP specific behavior is documented later in the conformance statement in the applicable SOP specific conformance section.

4.2.3.2. Association Policies

Each AE specification contains a description of the general association establishment and acceptance policies of the AE.

4.2.3.2.1. General

The DICOM standard application context is specified below.

Table 42: DICOM Application Context

Description	Value
Application Context Name	1.2.840.10008.3.1.1.1

4.2.3.2.2. Number of Associations

The number of simultaneous associations that an Application Entity may support as an Initiator or Acceptor is specified here.

Table 43: Number of associations as an Association Initiator for this AE

Description	Value
Maximum number of simultaneous associations	1

Table 44: Number of associations as an Association Acceptor for this AE

Description	Value
Maximum number of simultaneous associations	4

4.2.3.2.3. Asynchronous Nature

The implementation supports negotiation of multiple outstanding transactions, along with the maximum number of outstanding transactions supported.

Table 45: Asynchronous nature as an Association Initiator for this AE

Description	Value
Maximum number of outstanding asynchronous transactions	1

4.2.3.2.4. Implementation Identifying Information

The value supplied for Implementation Class UID and version name are documented here.

Table 46: DICOM Implementation Class and Version for MPPS AE

Implementation Class UID	1.2.40.0.13.1.3
Implementation Version Name	dcm4che-5.30.0

4.2.3.2.5. Communication Failure Handling

The behavior of the AE during communication failure is summarized in the next table.

Table 47: Communication Failure Behavior

Exception	Behavior
Timeout e.g. Association aborted, failed to connect	IntelliBridge Enterprise considers an ARTIM Timeout of 30 seconds as a communication failure

4.2.3.3. Association Initiation Policy

The behavior of this Application Entity is summarized in the next Table.

Table 48: Response Status Handler Behavior

Service Status	Error Code	Further Meaning	Behavior
Success	0000	Matching is complete	The SCP has successfully returned all matching information
Refused	A700	Out of Resources	A response is sent with this status code. Reason is Logged and released association.

Service Status	Error Code	Further Meaning	Behavior
Failure	C000	Unable to process	A response is sent with this status code. The reason is logged in the file.
Pending	FF00	Current match is supplied	Matches are continuing; Current match is supplied.

The Application Entity will respond to a received Association rejection as shown in the next table.

Table 49: Association Rejection response

Result	Source	Reason/Diagnosis	Behavior
1 - rejected-permanent	1 - DICOM UL service-user	1 - no-reason-given	The user is informed. Details are logged in central log file.
		2 - application-context-name-not supported	The user is informed. Details are logged in central log file.
		3 - calling-AE-title-not-recognized	The user is informed. Details are logged in central log file.
		7 - called-AE-title-not-recognized	The user is informed. Details are logged in central log file.
	2 - DICOM UL service-provider (ACSE related function)	1 - no-reason-given	The user is informed. Details are logged in central log file.
		2 - protocol-version-not-supported	The user is informed. Details are logged in central log file.
	3 - DICOM UL service-provider (Presentation related function)	1 - temporary-congestion	The user is informed. Details are logged in central log file.
		2 - local-limit-exceeded	The user is informed. Details are logged in central log file.
2 - rejected-transient	1 - DICOM UL service-user	1 - no-reason-given	The user is informed. Details are logged in central log file.
		2 - application-context-name-not-supported	The user is informed. Details are logged in central log file.
		3 - calling-AE-title-not-recognized	The user is informed. Details are logged in central log file.
		7 - called-AE-title-not-recognized	The user is informed. Details are logged in central log file.
	2 - DICOM UL service-provider (ACSE related function)	1 - no-reason-given	The user is informed. Details are logged in central log file.
		2 - protocol-version-not-supported	The user is informed. Details are logged in central log file.
	3 - DICOM UL service-provider (Presentation related function)	1 - temporary-congestion	The user is informed. Details are logged in central log file.
		2 - local-limit-exceeded	The user is informed. Details are logged in central log file.

The behavior of the AE on receiving an Association abort is summarized in the next table.

Table 50: Association Abort Handling

Source	Reason/Diagnosis	Behavior
0 - DICOM UL service-user (initiated abort)	0 - reason-not-specified	When received, terminates the connection and logs the event.
2 - DICOM UL service-provider (initiated abort)	0 - reason-not-specified	When received, terminates the connection and logs the event.
	1 - unrecognized-PDU	When received, terminates the connection and logs the event.
	2 - unexpected-PDU	When received, terminates the connection and logs the event.
	4 - unrecognized-PDU-parameter	When received, terminates the connection and logs the event.
	5 - unexpected-PDU-parameter	When received, terminates the connection and logs the event.
	6 - invalid-PDU-parameter-value	When received, terminates the connection and logs the event.

4.2.3.3.1. (Real-World) Activity – Modality Performed Procedure Step as SCU

4.2.3.3.1.1. Description and Sequencing of Activities

As MPPS SCU IntelliBridge Enterprise accepts the Modality Performed Procedure Step messages from remote SCUs and automatically forward them to remote SCPs as a SCU.

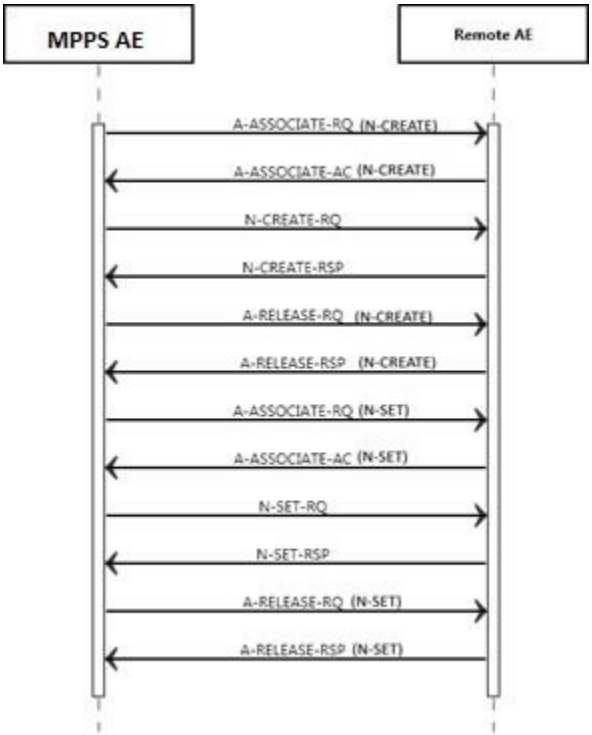

Figure 8: Sequencing of Report MPPS

4.2.3.3.1.2. Proposed Presentation Contexts

The presentation context proposed by Network AE for Report MPPS is defined in Table 51.

Table 51: Proposed Presentation Contexts for (Real-World) Activity – Modality Performed Procedure Step As SCU

Presentation Context Table					
Abstract Syntax		Transfer Syntax		Role	Extended Negotiation
Name	UID	Name List	UID List		
Modality Performed Procedure Step SOP Class	1.2.840.10008.3.1.2.3.3	Explicit VR Little Endian	1.2.840.10008.1.2.1	SCU	None
		Implicit VR Little Endian	1.2.840.10008.1.2		

Note that the order of the proposed transfer syntaxes is configurable.

4.2.3.3.1.3. SOP Specific Conformance for Modality Performed Procedure Step SOP Class

4.2.3.3.1.3.1. Dataset Specific Conformance for Modality Performed Procedure Step SOP Class N-CREATE-SCU

The possible responses behavior for N-CREATE-RQ is shown in Table 52.

Table 52: MPPS Request Identifiers for N-CREATE-RQ

Attribute Name	Tag	VR	Value	Comment
SOP Common Module				
Specific Character Set	0008,0005	CS	Default: ISO_IR 100.,ISO-IR 6, ISO-IR 101, ISO-IR 109 , ISO-IR 110, ISO-IR 144, ISO-IR 127, ISO-IR 126, ISO-IR 138, ISO-IR 148, ISO-IR 203, ISO-IR 14, ISO-IR 13, ISO-IR 166	
Performed Procedure Step Relationship Module				
Patient ID	0010,0020	LO		
Patient's Birth Date	0010,0030	DA		
Patient's Name	0010,0010	PN		
Patient's Sex	0010,0040	CS	F, M, O	
Issuer of Patient ID	0010,0021	LO		
Referenced Patient Sequence	0008,1120	SQ		
Scheduled Step Attributes Sequence	0040,0270	SQ		

>Accession Number	0008,0050	SH		
> Referenced Study Sequence	0008,1110	SQ		
>> Referenced SOP Class UID	0008,1150	UI		
>>Referenced SOP Instance UID	0008,1155	UI		
>Requested Procedure Description	0032,1060	LO		
>Study Instance UID	0020,000D	UI		
>Scheduled Protocol Code Sequence	0040,0008	SQ		
>Scheduled Procedure Step Start Date	0040,0002	DA		
>Scheduled Procedure Step Start Time	0040,0003	TM		
>Scheduled Procedure Step Description	0040,0007	LO		
>Scheduled Procedure Step ID	0040,0009	SH		
>Requested Procedure ID	0040,1001	SH		
Performed Procedure Step Information Module				
Performed Location	0040,0243	SH		
Performed Procedure Step Description	0040,0254	LO		
Performed Procedure Step End Date	0040,0250	DA		
Performed Procedure Step End Time	0040,0251	TM		
Performed Procedure Step ID	0040,0253	SH		
Performed Procedure Step Start Date	0040,0244	DA		
Performed Procedure Step Start Time	0040,0245	TM		
Performed Procedure Step Status	0040,0252	CS	IN PROGRESS	
Performed Procedure Type Description	0040,0255	LO		
Performed Station AE Title	0040,0241	AE		
Performed Station Name	0040,0242	SH		
Performed Procedure Step Discontinuation Reason Code Sequence	0040,0281	SQ		
Procedure Code Sequence	0008,1032	SQ		
Image Acquisition Results Module				
Modality	0008,0060	CS		
Study ID	0020,0010	SH		
Performed Protocol Code Sequence	0040,0260	SQ		

Performed Series Sequence	0040,0340	SQ		Always EMPTY

The possible status responses for N-CREATE-RQ actions are shown in Table 53.

Table 53: Status Response

Service Status	Error Code	Further Meaning	Behavior
Success	0000	Conformation, Matching is complete	The SCU has successfully returned all matching information. The association will be released. Message in console.
Failed	xxxx	(any other failure)	The Association is aborted using A-ABORT and the MPPS is marked as failed. The status meaning is logged and reported to the user. Message in console. The reason is logged.
	0110	Performed procedure step object may no longer be updated	Error ID 0110 Message in console. The reason is logged.
Warning	0116	Attribute Value Out of Range	The MPPS operation is considered successful but the status meaning is logged. Additional information in the Response identifying the attributes out of range will be logged (i.e. Elements in the Modification List / Attribute List)

4.2.3.3.1.4. Dataset Specific Conformance for Modality Performed Procedure Step SOP Class N-SET SCU

Table 54: MPPS Request Identifiers for N-SET-RQ

Attribute Name	Tag	VR	Value	Comment
Performed Procedure Step Information Module				
Performed Procedure Step End Date	0040,0250	DA	-	-
Performed Procedure Step Start Date	0040,0251	TM	-	-
Performed Procedure Step Status	0040,0252	CS	COMPLETED or DISCONTINUED	-
Performed Series Sequence	0040,0340	SQ	-	-
>Retrieve AE Title	0008,0054	AE	-	-
>Series Description	0008,103E	LO	-	-
>Performing Physician's Name	0008,1050	PN	-	-
>operators' Name	0008,1070	PN	-	-
>Reference Image Sequence	0008,1140	SQ	-	-
>Protocol Name	0018,1030	LO	-	-
>Series Instance UID	0028,000E	UI	-	-

Attribute Name	Tag	VR	Value	Comment
Performed Procedure Step Information Module				
>Referenced Non-Image Composite SOP Instance Sequence	0040,0220	SQ	-	-

IntelliBridge Enterprise does not report an error if any required key is missing in the query response.
This part of the section includes the dataset specific behavior, i.e. error codes, error and exception handling, time-outs, etc.

Table 55: Status Response

Service Status	Error Code	Further Meaning	Behavior
Success	0000	Conformation, Matching is complete	The SCU has successfully returned all matching information. The association will be released. Message in console.
Failed	xxxx	(any other failure)	The Association is aborted using A-ABORT and the MPPS is marked as failed. The status meaning is logged and reported to the user. Message in console. The reason is logged.
	0110	Performed procedure step object may no longer be updated	(Error ID 0110, Message in console. The reason is logged.
Warning	0116	Attribute Value Out of Range	The MPPS operation is considered successful but the status meaning is logged. Additional information in the Response identifying the attributes out of range will be logged (i.e. Elements in the Modification List / Attribute List)

4.2.3.4. Association Acceptance policy

4.2.3.4.1. (Real-World) Activity – Verification as SCP

4.2.3.4.1.1. Description and Sequencing of Activities

The MPPS AE receives application level communication using the C-ECHO command.

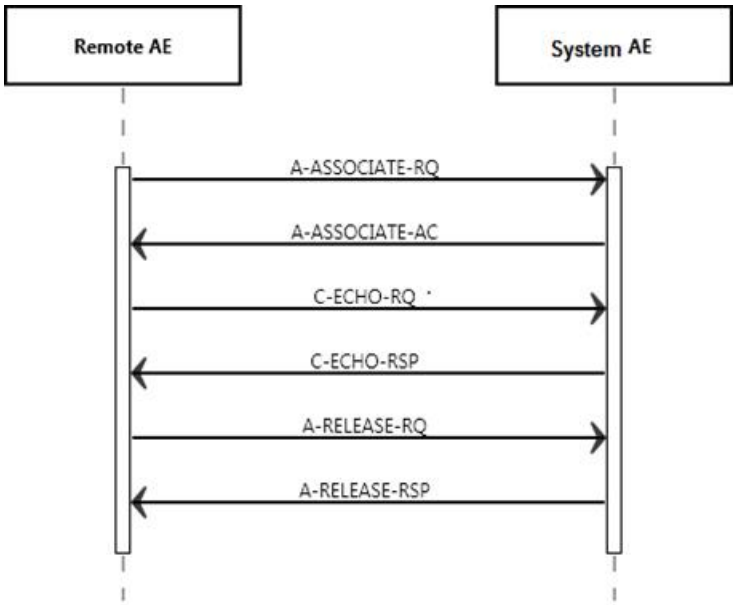

Figure 9: (Real World) Activity - Verification as SCP

4.2.3.4.1.2. Proposed Presentation Contexts

The presentation contexts are defined in the next table.

Table 56: Proposed Presentation Contexts for (Real-World) Activity – Verification as SCP

Presentation Context Table					
Abstract Syntax		Transfer Syntax		Role	Extended Negotiation
Name	UID	Name List	UID List		
Verification SOP Class	1.2.840.10008.1.1	Explicit VR Little Endian	1.2.840.10008.1.2.1	SCP Role	None
		Implicit VR Little Endian	1.2.840.10008.1.2		

4.2.3.4.1.3. SOP Specific Conformance for Verification SOP Class

The MPPS AE provides standard conformance to Verification SOP Class.

Table 57: Status Response

Service Status	Error Code	Further Meaning	Behavior
Success	0000	Matching is complete	Association will be released. Message logged in IntelliBridge Enterprise
Failure	A900	Identifier does not match SOP Class	Reason will be logged

Table 58: DICOM Command Communication Failure Behavior

Exception	Description
REPLAY TIMEOUT	Reason will be logged
ASSOCIATION ABORTED	Reason will be logged
ASSOCIATION TIMEOUT	Reason will be logged

4.2.3.4.2. (Real-World) Activity – Modality Performed Procedure Step as SCP

4.2.3.4.2.1. Description and Sequencing of Activities

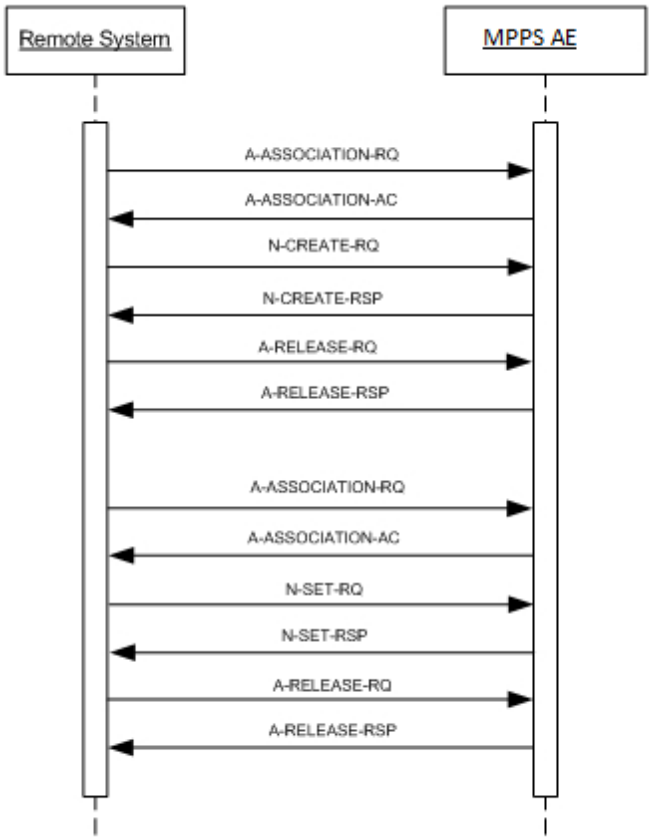

Figure 10: (Real-World) Activity – MPPS as SCP

4.2.3.4.2.2. Accepted Presentation Contexts

The presentation contexts are defined in the next table.

Table 59: Acceptable Presentation Contexts for (Real-World) Activity – Modality Performed Procedure Step as SCP

Presentation Context Table					
Abstract Syntax		Transfer Syntax		Role	Extended Negotiation
Name	UID	Name List	UID List		
Modality Performed Procedure Step SOP Class	1.2.840.10008.3.1.2.3.3	Explicit VR Little Endian	1.2.840.10008.1.2.1	SCP	None
		Implicit VR Little Endian	1.2.840.10008.1.2		

4.2.3.4.2.3. SOP Specific Conformance for Modality Performed Procedure Step SOP Class

This section and sub-section include the manufacturer SOP and Dataset specific information as well the status codes and their corresponding behavior.

4.2.3.4.2.3.1. Dataset Specific Conformance for Modality Performed Procedure Step SOP Class N-CREATE-SCP

Details regarding the Dataset Specific response behavior will be reported in this section.

This part of the section includes the dataset specific behavior, i.e. error codes, error and exception handling, time-outs, etc.

Table 60: Status Response

Service Status	Error Code	Further Meaning	Behavior
Success	0000	Success	
Failed	0121	Missing attribute value	
Failed	0106	Invalid Attribute Value	Failure reason is logged, and association is closed

4.2.3.4.2.3.2. Dataset Specific Conformance for Modality Performed Procedure Step SOP Class N-SET-SCP

This part of the section includes the dataset specific behavior, i.e. error codes, error and exception handling, time-outs, etc.

Table 61: Status Response

Service Status	Error Code	Further Meaning	Triggering Condition
Success	0000	Success	When the MPPS is completed successfully
Failed	0121	Missing attribute value	When MPPS does not succeed due to missing attribute value
Failed	0106	Invalid Attribute Value	Failure reason is logged, and association is closed

4.2.4. Storage AE

Detail of this specific Application Entity is specified in this section.

4.2.4.1. SOP Classes

This Application Entity provides Standard Conformance to the following SOP Classes.

Table 62: SOP Classes for storage AE

SOP Class Name	SOP Class UID	SCU	SCP
Computed Radiography Image Storage SOP Class	1.2.840.10008.5.1.4.1.1.1	Yes	Yes
Digital X-Ray Image Storage – For Presentation SOP Class	1.2.840.10008.5.1.4.1.1.1.1	Yes	Yes
Digital X-Ray Image Storage – For Processing SOP Class	1.2.840.10008.5.1.4.1.1.1.1.1	Yes	Yes
Digital Mammography X-Ray Image Storage – For Presentation SOP Class	1.2.840.10008.5.1.4.1.1.1.2	Yes	Yes
Digital Mammography X-Ray Image Storage – For Processing SOP Class	1.2.840.10008.5.1.4.1.1.1.2.1	Yes	Yes
Digital Intra Oral X-Ray Image Storage – For Presentation SOP Class	1.2.840.10008.5.1.4.1.1.1.3	Yes	Yes
Digital Intra Oral X-Ray Image Storage – For Processing SOP Class	1.2.840.10008.5.1.4.1.1.1.3.1	Yes	Yes
CT Image Storage SOP Class	1.2.840.10008.5.1.4.1.1.2	Yes	Yes
Enhanced CT Image Storage SOP Class	1.2.840.10008.5.1.4.1.1.2.1	Yes	Yes
Hardcopy Grayscale Image Storage SOP Class	1.2.840.10008.5.1.1.29	Yes	Yes
Hardcopy Color Image Storage SOP Class	1.2.840.10008.5.1.1.30	Yes	Yes
Legacy Converted Enhanced CT Image Storage SOP Class	1.2.840.10008.5.1.4.1.1.2.2	Yes	Yes
Ultrasound Multi Frame Image Storage SOP Class (Retired)	1.2.840.10008.5.1.4.1.1.3	Yes	Yes
Ultrasound Multi Frame Image Storage SOP Class	1.2.840.10008.5.1.4.1.1.3.1	Yes	Yes
MR Image Storage SOP Class	1.2.840.10008.5.1.4.1.1.4	Yes	Yes
Enhanced MR Image Storage SOP Class	1.2.840.10008.5.1.4.1.1.4.1	Yes	Yes
MR Spectroscopy Storage SOP Class	1.2.840.10008.5.1.4.1.1.4.2	Yes	Yes
Enhanced MR Color Image Storage SOP Class	1.2.840.10008.5.1.4.1.1.4.3	Yes	Yes
Legacy Converted Enhanced MR Image Storage SOP Class	1.2.840.10008.5.1.4.1.1.4.4	Yes	Yes
Nuclear Medicine Image Storage SOP Class (Retired)	1.2.840.10008.5.1.4.1.1.5	Yes	Yes
Ultrasound Image Storage SOP Class (Retired)	1.2.840.10008.5.1.4.1.1.6	Yes	Yes
Ultrasound Image Storage SOP Class	1.2.840.10008.5.1.4.1.1.6.1	Yes	Yes
Enhanced US Volume Storage SOP Class	1.2.840.10008.5.1.4.1.1.6.2	Yes	Yes
Secondary Capture Image Storage SOP Class	1.2.840.10008.5.1.4.1.1.7	Yes	Yes
Multi Frame Single Bit Secondary Capture Image Storage SOP Class	1.2.840.10008.5.1.4.1.1.7.1	Yes	Yes
Multi Frame Grayscale Byte Secondary Capture Image Storage SOP Class	1.2.840.10008.5.1.4.1.1.7.2	Yes	Yes
Multi Frame Grayscale Word Secondary Capture Image Storage SOP Class	1.2.840.10008.5.1.4.1.1.7.3	Yes	Yes
Multi Frame True Color Secondary Capture Image Storage SOP Class	1.2.840.10008.5.1.4.1.1.7.4	Yes	Yes

SOP Class Name	SOP Class UID	SCU	SCP
Standalone Overlay Storage SOP Class	1.2.840.10008.5.1.4.1.1.8	Yes	Yes
Standalone Curve Storage SOP Class	1.2.840.10008.5.1.4.1.1.9	Yes	Yes
Waveform Storage Trial SOP Class	1.2.840.10008.5.1.4.1.1.9.1	Yes	Yes
Twelve Lead ECG Waveform Storage SOP Class	1.2.840.10008.5.1.4.1.1.9.1.1	Yes	Yes
General ECG Waveform Storage SOP Class	1.2.840.10008.5.1.4.1.1.9.1.2	Yes	Yes
Ambulatory ECG Waveform Storage SOP Class	1.2.840.10008.5.1.4.1.1.9.1.3	Yes	Yes
Hemodynamic Waveform Storage SOP Class	1.2.840.10008.5.1.4.1.1.9.2.1	Yes	Yes
Cardiac Electrophysiology Waveform Storage SOP Class	1.2.840.10008.5.1.4.1.1.9.3.1	Yes	Yes
Basic Voice Audio Waveform Storage SOP Class	1.2.840.10008.5.1.4.1.1.9.4.1	Yes	Yes
General Audio Waveform Storage	1.2.840.10008.5.1.4.1.1.9.4.2	Yes	Yes
Arterial Pulse Waveform Storage SOP Class	1.2.840.10008.5.1.4.1.1.9.5.1	Yes	Yes
Respiratory Waveform Storage SOP Class	1.2.840.10008.5.1.4.1.1.9.6.1	Yes	Yes
Standalone Modality LUT Storage SOP Class	1.2.840.10008.5.1.4.1.1.10	Yes	Yes
Standalone VOILUT Storage SOP Class	1.2.840.10008.5.1.4.1.1.11	Yes	Yes
Grayscale Softcopy Presentation State Storage SOP Class	1.2.840.10008.5.1.4.1.1.11.1	Yes	Yes
Color Softcopy Presentation State Storage SOP Class	1.2.840.10008.5.1.4.1.1.11.2	Yes	Yes
Pseudo Color Softcopy Presentation State Storage SOP Class	1.2.840.10008.5.1.4.1.1.11.3	Yes	Yes
Blending Softcopy Presentation State Storage SOP Class	1.2.840.10008.5.1.4.1.1.11.4	Yes	Yes
XA-XRF Grayscale Softcopy Presentation State Storage SOP Class	1.2.840.10008.5.1.4.1.1.11.5	Yes	Yes
Grayscale Planar MPR Volumetric Presentation State Storage SOP Class	1.2.840.10008.5.1.4.1.1.11.6	Yes	Yes
Compositing Planar MPR Volumetric Presentation State Storage SOP Class	1.2.840.10008.5.1.4.1.1.11.7	Yes	Yes
Advanced Blending Presentation State Storage SOP Class	1.2.840.10008.5.1.4.1.1.11.8	Yes	Yes
Volume Rendering Volumetric Presentation State Storage SOP Class	1.2.840.10008.5.1.4.1.1.11.9	Yes	Yes
Segmented Volume Rendering Volumetric Presentation State Storage SOP Class	1.2.840.10008.5.1.4.1.1.11.10	Yes	Yes
Multiple Volume Rendering Volumetric Presentation State Storage SOP Class	1.2.840.10008.5.1.4.1.1.11.11	Yes	Yes
X-Ray Angiographic Image Storage SOP Class	1.2.840.10008.5.1.4.1.1.12.1	Yes	Yes
Enhanced XA Image Storage SOP Class	1.2.840.10008.5.1.4.1.1.12.1.1	Yes	Yes
X-Ray Radiofluoroscopic Image Storage SOP Class	1.2.840.10008.5.1.4.1.1.12.2	Yes	Yes
Enhanced XRF Image Storage SOP Class	1.2.840.10008.5.1.4.1.1.12.2.1	Yes	Yes
X-Ray Angiographic Bi Plane Image Storage SOP Class	1.2.840.10008.5.1.4.1.1.12.3	Yes	Yes
X-Ray 3D Angiographic Image Storage SOP Class	1.2.840.10008.5.1.4.1.1.13.1.1	Yes	Yes
X-Ray 3D Craniofacial Image Storage SOP Class	1.2.840.10008.5.1.4.1.1.13.1.2	Yes	Yes
Breast Tomosynthesis Image Storage SOP Class	1.2.840.10008.5.1.4.1.1.13.1.3	Yes	Yes

SOP Class Name	SOP Class UID	SCU	SCP
Breast Projection X-Ray Image Storage – For Presentation SOP Class	1.2.840.10008.5.1.4.1.1.13.1.4	Yes	Yes
Breast Projection X-Ray Image Storage – For Processing SOP Class	1.2.840.10008.5.1.4.1.1.13.1.5	Yes	Yes
Intravascular Optical Coherence Tomography Image Storage – For Presentation SOP Class	1.2.840.10008.5.1.4.1.1.14.1	Yes	Yes
Intravascular Optical Coherence Tomography Image Storage – For Processing SOP Class	1.2.840.10008.5.1.4.1.1.14.2	Yes	Yes
Parametric Map Storage SOP Class	1.2.840.10008.5.1.4.1.1.30	Yes	Yes
MR Image Storage Zero Padded SOP Class (Retired)	1.2.840.10008.5.1.4.1.1.40	Yes	Yes
Raw Data Storage SOP Class	1.2.840.10008.5.1.4.1.1.66	Yes	Yes
Spatial Registration Storage SOP Class	1.2.840.10008.5.1.4.1.1.66.1	Yes	Yes
Spatial Fiducials Storage SOP Class	1.2.840.10008.5.1.4.1.1.66.2	Yes	Yes
Deformable Spatial Registration Storage SOP Class	1.2.840.10008.5.1.4.1.1.66.3	Yes	Yes
Segmentation Storage SOP Class	1.2.840.10008.5.1.4.1.1.66.4	Yes	Yes
Surface Segmentation Storage SOP Class	1.2.840.10008.5.1.4.1.1.66.5	Yes	Yes
Tractography Results Storage SOP Class	1.2.840.10008.5.1.4.1.1.66.6	Yes	Yes
Real World Value Mapping Storage SOP Class	1.2.840.10008.5.1.4.1.1.67	Yes	Yes
Surface Scan Mesh Storage SOP Class	1.2.840.10008.5.1.4.1.1.68.1	Yes	Yes
Surface Scan Point Cloud Storage SOP Class	1.2.840.10008.5.1.4.1.1.68.2	Yes	Yes
VL Image Storage Trial SOP Class	1.2.840.10008.5.1.4.1.1.77.1	Yes	Yes
VL Multi Frame Image Storage Trial SOP Class	1.2.840.10008.5.1.4.1.1.77.2	Yes	Yes
VL Endoscopic Image Storage SOP Class	1.2.840.10008.5.1.4.1.1.77.1.1	Yes	Yes
Video Endoscopic Image Storage SOP Class	1.2.840.10008.5.1.4.1.1.77.1.1.1	Yes	Yes
VL Microscopic Image Storage SOP Class	1.2.840.10008.5.1.4.1.1.77.1.2	Yes	Yes
Video Microscopic Image Storage SOP Class	1.2.840.10008.5.1.4.1.1.77.1.2.1	Yes	Yes
VL Slide Coordinates Microscopic Image Storage SOP Class	1.2.840.10008.5.1.4.1.1.77.1.3	Yes	Yes
VL Photographic Image Storage SOP Class	1.2.840.10008.5.1.4.1.1.77.1.4	Yes	Yes
Video Photographic Image Storage SOP Class	1.2.840.10008.5.1.4.1.1.77.1.4.1	Yes	Yes
Ophthalmic Photography 8 Bit Image Storage SOP Class	1.2.840.10008.5.1.4.1.1.77.1.5.1	Yes	Yes
Ophthalmic Photography 16 Bit Image Storage SOP Class	1.2.840.10008.5.1.4.1.1.77.1.5.2	Yes	Yes
Stereometric Relationship Storage SOP Class	1.2.840.10008.5.1.4.1.1.77.1.5.3	Yes	Yes
Ophthalmic Tomography Image Storage SOP Class	1.2.840.10008.5.1.4.1.1.77.1.5.4	Yes	Yes
Wide Field Ophthalmic Photography Stereographic Projection Image Storage SOP Class	1.2.840.10008.5.1.4.1.1.77.1.5.5	Yes	Yes
Wide Field Ophthalmic Photography 3D Coordinates Image Storage SOP Class	1.2.840.10008.5.1.4.1.1.77.1.5.6	Yes	Yes
Ophthalmic Optical Coherence Tomography En Face Image Storage SOP Class	1.2.840.10008.5.1.4.1.1.77.1.5.7	Yes	Yes

SOP Class Name	SOP Class UID	SCU	SCP
Ophthalmic Optical Coherence Tomography B-scan Volume Analysis Storage SOP Class	1.2.840.10008.5.1.4.1.1.77.1.5.8	Yes	Yes
VL Whole Slide Microscopy Image Storage SOP Class	1.2.840.10008.5.1.4.1.1.77.1.6	Yes	Yes
Lensometry Measurements Storage SOP Class	1.2.840.10008.5.1.4.1.1.78.1	Yes	Yes
Autorefraction Measurements Storage SOP Class	1.2.840.10008.5.1.4.1.1.78.2	Yes	Yes
Keratometry Measurements Storage SOP Class	1.2.840.10008.5.1.4.1.1.78.3	Yes	Yes
Subjective Refraction Measurements Storage SOP Class	1.2.840.10008.5.1.4.1.1.78.4	Yes	Yes
Visual Acuity Measurements Storage SOP Class	1.2.840.10008.5.1.4.1.1.78.5	Yes	Yes
Spectacle Prescription Report Storage SOP Class	1.2.840.10008.5.1.4.1.1.78.6	Yes	Yes
Ophthalmic Axial Measurements Storage SOP Class	1.2.840.10008.5.1.4.1.1.78.7	Yes	Yes
Intraocular Lens Calculations Storage SOP Class	1.2.840.10008.5.1.4.1.1.78.8	Yes	Yes
Macular Grid Thickness and Volume Report Storage SOP Class	1.2.840.10008.5.1.4.1.1.79.1	Yes	Yes
Ophthalmic Visual Field Static Perimetry Measurements Storage SOP Class	1.2.840.10008.5.1.4.1.1.80.1	Yes	Yes
Ophthalmic Thickness Map Storage SOP Class	1.2.840.10008.5.1.4.1.1.81.1	Yes	Yes
Corneal Topography Map Storage SOP Class	1.2.840.10008.5.1.4.1.1.82.1	Yes	Yes
Text SR Storage Trial SOP Class	1.2.840.10008.5.1.4.1.1.88.1	Yes	Yes
Audio SR Storage Trial SOP Class	1.2.840.10008.5.1.4.1.1.88.2	Yes	Yes
Detail SR Storage Trial SOP Class	1.2.840.10008.5.1.4.1.1.88.3	Yes	Yes
Comprehensive SR Storage Trial SOP Class	1.2.840.10008.5.1.4.1.1.88.4	Yes	Yes
Basic Text SR Storage SOP Class	1.2.840.10008.5.1.4.1.1.88.11	Yes	Yes
Enhanced SR Storage SOP Class	1.2.840.10008.5.1.4.1.1.88.22	Yes	Yes
Comprehensive SR Storage SOP Class	1.2.840.10008.5.1.4.1.1.88.33	Yes	Yes
Comprehensive 3D SR Storage SOP Class	1.2.840.10008.5.1.4.1.1.88.34	Yes	Yes
Extensible SR Storage SOP Class	1.2.840.10008.5.1.4.1.1.88.35	Yes	Yes
Procedure Log Storage SOP Class	1.2.840.10008.5.1.4.1.1.88.40	Yes	Yes
Mammography CAD SR Storage SOP Class	1.2.840.10008.5.1.4.1.1.88.50	Yes	Yes
Key Object Selection Document Storage SOP Class	1.2.840.10008.5.1.4.1.1.88.59	Yes	Yes
Chest CAD SR Storage SOP Class	1.2.840.10008.5.1.4.1.1.88.65	Yes	Yes
X-Ray Radiation Dose SR Storage SOP Class	1.2.840.10008.5.1.4.1.1.88.67	Yes	Yes
Radiopharmaceutical Radiation Dose SR Storage SOP Class	1.2.840.10008.5.1.4.1.1.88.68	Yes	Yes
Colon CAD SR Storage SOP Class	1.2.840.10008.5.1.4.1.1.88.69	Yes	Yes
Implantation Plan SR Storage SOP Class	1.2.840.10008.5.1.4.1.1.88.70	Yes	Yes
Acquisition Context SR Storage SOP Class	1.2.840.10008.5.1.4.1.1.88.71	Yes	Yes
Simplified Adult Echo SR Storage SOP Class	1.2.840.10008.5.1.4.1.1.88.72	Yes	Yes
Patient Radiation Dose SR Storage SOP Class	1.2.840.10008.5.1.4.1.1.88.73	Yes	Yes
Content Assessment Results Storage SOP Class	1.2.840.10008.5.1.4.1.1.90.1	Yes	Yes
Encapsulated PDF Storage SOP Class	1.2.840.10008.5.1.4.1.1.104.1	Yes	Yes

SOP Class Name	SOP Class UID	SCU	SCP
Encapsulated CDA Storage SOP Class	1.2.840.10008.5.1.4.1.1.104.2	Yes	Yes
Encapsulated STL Storage SOP Class	1.2.840.10008.5.1.4.1.1.104.3	Yes	Yes
Positron Emission Tomography Image Storage SOP Class	1.2.840.10008.5.1.4.1.1.128	Yes	Yes
Legacy Converted Enhanced PET Image Storage SOP Class	1.2.840.10008.5.1.4.1.1.128.1	Yes	Yes
Standalone PET Curve Storage SOP Class	1.2.840.10008.5.1.4.1.1.129	Yes	Yes
Enhanced PET Image Storage SOP Class	1.2.840.10008.5.1.4.1.1.130	Yes	Yes
Basic Structured Display Storage SOP Class	1.2.840.10008.5.1.4.1.1.131	Yes	Yes
CT Defined Procedure Protocol Storage SOP Class	1.2.840.10008.5.1.4.1.1.200.1	Yes	Yes
CT Performed Procedure Protocol Storage SOP Class	1.2.840.10008.5.1.4.1.1.200.2	Yes	Yes
Protocol Approval Storage SOP Class	1.2.840.10008.5.1.4.1.1.200.3	Yes	Yes
RT Image Storage SOP Class	1.2.840.10008.5.1.4.1.1.481.1	Yes	Yes
RT Dose Storage SOP Class	1.2.840.10008.5.1.4.1.1.481.2	Yes	Yes
RT Structure Set Storage SOP Class	1.2.840.10008.5.1.4.1.1.481.3	Yes	Yes
RT Beams Treatment Record Storage SOP Class	1.2.840.10008.5.1.4.1.1.481.4	Yes	Yes
RT Plan Storage SOP Class	1.2.840.10008.5.1.4.1.1.481.5	Yes	Yes
RT Brachy Treatment Record Storage SOP Class	1.2.840.10008.5.1.4.1.1.481.6	Yes	Yes
RT Treatment Summary Record Storage SOP Class	1.2.840.10008.5.1.4.1.1.481.7	Yes	Yes
RT Ion Plan Storage SOP Class	1.2.840.10008.5.1.4.1.1.481.8	Yes	Yes
RT Ion Beams Treatment Record Storage SOP Class	1.2.840.10008.5.1.4.1.1.481.9	Yes	Yes
RT Beams Delivery Instruction Storage Trial SOP Class	1.2.840.10008.5.1.4.34.1	Yes	Yes
RT Beams Delivery Instruction Storage SOP Class	1.2.840.10008.5.1.4.34.7	Yes	Yes
RT Brachy Application Setup Delivery Instruction Storage SOP Class	1.2.840.10008.5.1.4.34.10	Yes	Yes
Hanging Protocol Storage SOP Class	1.2.840.10008.5.1.4.38.1	Yes	Yes
Color Palette Storage SOP Class	1.2.840.10008.5.1.4.39.1	Yes	Yes
Generic Implant Template Storage SOP Class	1.2.840.10008.5.1.4.43.1	Yes	Yes
Implant Assembly Template Storage SOP Class	1.2.840.10008.5.1.4.44.1	Yes	Yes
Implant Template Group Storage SOP Class	1.2.840.10008.5.1.4.45.1	Yes	Yes
Stored Print Storage SOP Class (Retired)	1.2.840.10008.5.1.1.27	Yes	Yes

Note: Any SOP specific behavior is documented later in the conformance statement in the applicable SOP specific conformance section.

4.2.4.2. Association Policies

Each AE specification contains a description of the general association establishment and acceptance policies of the AE.

4.2.4.2.1. General

The DICOM standard application context is specified below.

Table 63: DICOM Application Context

Description	Value
Application Context Name	1.2.840.10008.3.1.1.1

4.2.4.2.2. Number of Associations

The number of simultaneous associations that an Application Entity may support as an Initiator or Acceptor is specified here.

Table 64: Number of associations as an Association Initiator for this AE

Description	Value
Maximum number of simultaneous associations	Configurable / limited by system resources

Table 65: Number of associations as an Association Acceptor for this AE

Description	Value
Maximum number of simultaneous associations	Configurable / limited by system resources (Default value 50)

4.2.4.2.3. Asynchronous Nature

The implementation supports negotiation of multiple outstanding transactions, along with the maximum number of outstanding transactions supported.

Table 66: Asynchronous nature as an Association Initiator for this AE

Description	Value
Maximum number of outstanding asynchronous transactions	1

4.2.4.2.4. Implementation Identifying Information

The value supplied for Implementation Class UID and version name are documented here.

Table 67: DICOM Implementation Class and Version for storage AE

Implementation Class UID	1.2.40.0.13.1.3
Implementation Version Name	dcm4che-5.30.0

4.2.4.2.5. Communication Failure Handling

The behavior of the AE during communication failure is summarized in the next table.

Table 68: Communication Failure Behavior

Exception	Behavior
ARTIM Timeout	The association is released, and the reason is logged.

4.2.4.3. Association Initiation Policy

The Application Entity will respond to a received Association rejection as shown in the next table.

Table 69: Association Rejection response

Result	Source	Reason/Diagnosis	Behavior
1 - rejected-permanent	1 - DICOM UL service-user	1 - no-reason-given	Association is not established. The following error is logged. Association rejected by peer 1: REJECT_RESULT_permanent, 1: REJECT_SOURCE_dul_user, 1: REJECT_REASON_no_reason_given
		2 - application-context-name-not supported	Association is not established. The following error is logged. Association rejected by peer 1: REJECT_RESULT_permanent, 1: REJECT_SOURCE_dul_user, 2: REJECT_REASON_application_context_not_support
		3 - calling-AE-title-not-recognized	Association is not established. The following error is logged. Association rejected by peer 1: REJECT_RESULT_permanent, 1: REJECT_SOURCE_dul_user, 3: REJECT_REASON_calling_aetitle_not_recognized
		7 - called-AE-title-not-recognized	Association is not established. The following error is logged. Association rejected by peer 1: REJECT_RESULT_permanent, 1: REJECT_SOURCE_dul_user, 7: REJECT_REASON_called_aetitle_not_recognized
	2 - DICOM UL service-provide (ACSE related function)	1 - no-reason-given	Association is not established. The following error is logged. Error: UserRecoverable: impl.dicom.access.PEER: Associationrejected by peer 1: REJECT_RESULT_permanent, 2: REJECT_SOURCE_dul_provider (acse), 1: REJECT_REASON_no_reason_given
		2 - protocol-version-not-supported	Association is not established. The following error is logged. Association rejected by peer 1: REJECT_RESULT_permanent, 2: REJECT_SOURCE_dul_provider (acse), 2: REJECT_REASON_application_context_not_support
	3 - DICOM UL service-provider (Presentation related function)	1 - temporary-congestion	Association is not established. The following error is logged. Association rejected by peer 1: REJECT_RESULT_permanent, 3: REJECT_SOURCE_dul_provider (presentation), 1: REJECT_REASON_no_reason_given)

Result	Source	Reason/Diagnosis	Behavior
		2 - local-limit-exceeded	Association is not established. The following error is logged. Association rejected by peer 1: REJECT_RESULT_permanent, 3: REJECT_SOURCE_dul_provider (presentation), 2: REJECT_REASON_application_context_not_support
2 - rejected-transient	1 - DICOM UL service-user	1 - no-reason-given	Association is not established. The following error is logged. Association rejected by peer 2: REJECT_RESULT_transient, 1: REJECT_SOURCE_dul_user, 1: REJECT_REASON_no_reason_given
		2 - application-context-name-not-supported	Association is not established. The following error is logged. Association rejected by peer 2: REJECT_RESULT_transient, 1: REJECT_SOURCE_dul_user, 2: REJECT_REASON_application_context_not_support
		3 - calling-AE-title-not-recognized	Association is not established. The following error is logged. Association rejected by peer 2: REJECT_RESULT_transient, 1: REJECT_SOURCE_dul_user, 3: REJECT_REASON_calling_aetitle_not_recognized
		7 - called-AE-title-not-recognized	Association is not established. The following error is logged. Association rejected by peer 2: REJECT_RESULT_transient, 1: REJECT_SOURCE_dul_user, 7: REJECT_REASON_called_aetitle_not_recognized
	2 - DICOM UL service-provider (ACSE related function)	1 - no-reason-given	Association is not established. The following error is logged. Association rejected by peer 2: REJECT_RESULT_transient, 2: REJECT_SOURCE_dul_provider (acse), 1: REJECT_REASON_no_reason_given
		2 - protocol-version-not-supported	Association is not established. The following error is logged. Association rejected by peer 2: REJECT_RESULT_transient, 2: REJECT_SOURCE_dul_provider (acse), 2: REJECT_REASON_application_context_not_support
	3 - DICOM UL service-provider(Presentation related function)	1 - temporary-congestion	Association is not established. The following error is logged. Association rejected by peer 2: REJECT_RESULT_transient, 3: REJECT_SOURCE_dul_provider (presentation), 1: REJECT_REASON_no_reason_given

Result	Source	Reason/Diagnosis	Behavior
		2 - local-limit-exceeded	Association is not established. The following error is logged. Association rejected by peer 2: REJECT_RESULT_transient, 3: REJECT_SOURCE_dul_provider (presentation), 2: REJECT_REASON_application_context_not_support

The behavior of the AE on receiving an Association abort is summarized in the next table.

Table 70: Association Abort Handling

Source	Reason/Diagnosis	Behavior when received	Sent when
0 - DICOM UL service-user (initiated abort)	0- reason-not-specified	When received, the IBE terminates the connection with the following log: Association ABORTED by peer 0: ABORT_SOURCE_dul_user, 0: ABORT_REASON_not_specified	• N-EVENT-REPORT for printing received with status FAILURE. • Abort is issued to an executing job that utilizes this network connection (ExportNetwork/ ArchiveNetwork/DICOMCopy/DICOMMove) • Any other problem than ones specified for SCU in the rows below. (Examples: Problem while decoding the DICOM stream, SCU was unable to send the Response to SCP, Error writing to SCU stream).
2 - DICOM UL service-provider (initiated abort)	0 - reason-not-specified	When received, the IBE terminates the connection with the following log: Association ABORTED by peer 2: ABORT_SOURCE_dul_provider, 0: ABORT_REASON_not_specified	• There are problems in SCU/SCP role negotiation. • Any other problem than ones specified for SCU in the rows below. (Example: Problem while decoding the DICOM stream).
	1 - unrecognized-PDU	When received, the IBE terminates the connection with the following log: Association ABORTED by peer 2: ABORT_SOURCE_dul_provider, 1: ABORT_REASON_unrecognized_pdu.	An unrecognized PDU type is received[4].
	2 - unexpected-PDU	When received, The IBE terminates the connection with the following log: Association ABORTED by peer 2: ABORT_SOURCE_dul_provider, 2: ABORT_REASON_unexpected_pdu.	The received PDU type is not expected in the current state of connection[5].
	4 - unrecognized-PDU-parameter	When received, The IBE terminates the connection with the following log: Association ABORTED by peer 2: ABORT_SOURCE_dul_provider, 4: ABORT_REASON_unrecognized_pdu_parameter.	An unrecognized Associate PDU item is received[1].

Source	Reason/Diagnosis	Behavior when received	Sent when
	5 - unexpected-PDU-parameter	When received, The IBE terminates the connection with the following log: Association ABORTED by peer 2: ABORT_SOURCE_dul_provider, 5: ABORT_REASON_unexpected_pdu_parameter.	• One of the Associate PDU items is received more than once[2]. • One of the Associate PDU items is received unexpectedly[2].
	6 - invalid-PDU-parameter-value	When received, The IBE terminates the connection with the following log: Association ABORTED by peer 2: ABORT_SOURCE_dul_provider, 6: ABORT_REASON_invalid_pdu_parameter.	• One of the Associate PDU items is received more than once[3]. • One of the Associate PDU items is not received[3]. • There is mismatch in the application context names between the SCU and the SCP. • Illegal Asynchronous Operations Window invoke value is received. • Illegal Asynchronous Operations Window perform value is received. • Unknown presentation context id is received. • Unknown abstract syntax is received. • The length or the format of a received PDU item is invalid.

4.2.4.3.1. (Real-World) Activity – Image Export

4.2.4.3.1.1. Description and Sequencing of Activities

The IBE implements the Storage service class as part to store selected images at an archive or other storage SCP. All actual selected images are exported using one and the same association. The IBE waits for synchronous report until, after a configurable time passed, it will release the association.

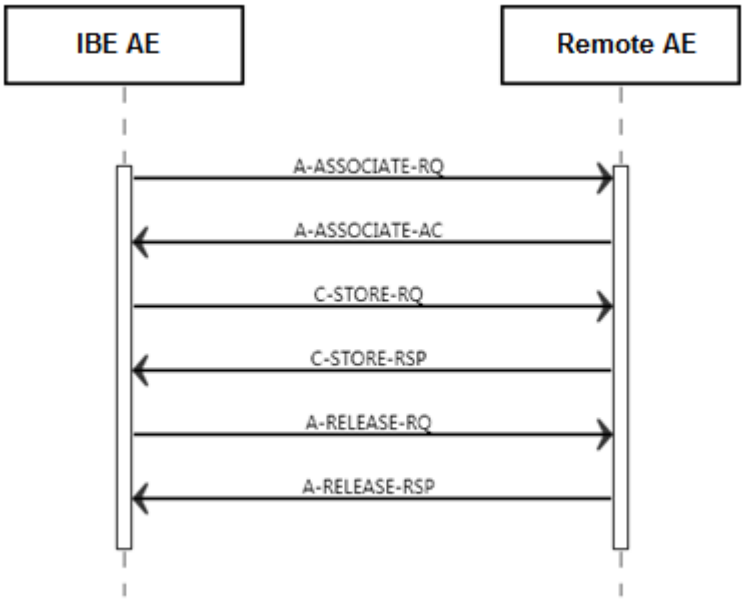

Figure 11: (Real World) Activity - Image Export

4.2.4.3.1.2. Proposed Presentation Contexts

The presentation contexts are defined in the next table.

Table 71: Proposed Presentation Contexts for (Real-World) Activity – Image Export

Presentation Context Table					
Abstract Syntax		Transfer Syntax		Role	Extended Negotiation
Name	UID	Name List	UID List		
Computed Radiography Image Storage SOP Class	1.2.840.10008.5.1.4.1.1.1	Explicit VR Little Endian	1.2.840.10008.1.2.1	SCU	None
		Implicit VR Little Endian	1.2.840.10008.1.2		
Digital Mammography X-Ray Image Storage - Pres. SOP	1.2.840.10008.5.1.4.1.1.1.2	Explicit VR Little Endian	1.2.840.10008.1.2.1	SCU	None
		Implicit VR Little Endian	1.2.840.10008.1.2		
Digital Mammography X-Ray Image Storage - Proc. SOP	1.2.840.10008.5.1.4.1.1.1.2.1	Explicit VR Little Endian	1.2.840.10008.1.2.1	SCU	None
		Implicit VR Little Endian	1.2.840.10008.1.2		
Digital X-Ray Image Storage - For Pres. SOP	1.2.840.10008.5.1.4.1.1.1.1	Explicit VR Little Endian	1.2.840.10008.1.2.1	SCU	None

Presentation Context Table					
Abstract Syntax		Transfer Syntax		Role	Extended Negotiation
Name	UID	Name List	UID List		
		Implicit VR Little Endian	1.2.840.10008.1.2		
Digital X-Ray Image Storage - For Proc. SOP	1.2.840.10008.5.1.4.1.1.1.1.1	Explicit VR Little Endian	1.2.840.10008.1.2.1	SCU	None
		Implicit VR Little Endian	1.2.840.10008.1.2		
Digital Intra Oral X-Ray Image Storage – For Presentation SOP Class	1.2.840.10008.5.1.4.1.1.1.3	Explicit VR Little Endian	1.2.840.10008.1.2.1	SCU	None
		Implicit VR Little Endian	1.2.840.10008.1.2		
Digital Intra Oral X-Ray Image Storage – For Processing SOP Class	1.2.840.10008.5.1.4.1.1.1.3.1	Explicit VR Little Endian	1.2.840.10008.1.2.1	SCU	None
		Implicit VR Little Endian	1.2.840.10008.1.2		
CT Image Storage SOP Class	1.2.840.10008.5.1.4.1.1.2	Explicit VR Little Endian	1.2.840.10008.1.2.1	SCU	None
		Implicit VR Little Endian	1.2.840.10008.1.2		
Enhanced CT Image Storage SOP Class	1.2.840.10008.5.1.4.1.1.2.1	Explicit VR Little Endian	1.2.840.10008.1.2.1	SCU	None
		Implicit VR Little Endian	1.2.840.10008.1.2		
Hardcopy Grayscale Image Storage SOP Class	1.2.840.10008.5.1.1.29	Explicit VR Little Endian	1.2.840.10008.1.2.1	SCU	None
		Implicit VR Little Endian	1.2.840.10008.1.2		
Hardcopy Color Image Storage SOP Class	1.2.840.10008.5.1.1.30	Explicit VR Little Endian	1.2.840.10008.1.2.1	SCU	None
		Implicit VR Little Endian	1.2.840.10008.1.2		
Legacy Converted Enhanced CT Image Storage SOP Class	1.2.840.10008.5.1.4.1.1.2.2	Explicit VR Little Endian	1.2.840.10008.1.2.1	SCU	None
		Implicit VR Little Endian	1.2.840.10008.1.2		
	1.2.840.10008.5.1.4.1.1.3	Explicit VR Little Endian	1.2.840.10008.1.2.1	SCU	None

Presentation Context Table					
Abstract Syntax		Transfer Syntax		Role	Extended Negotiation
Name	UID	Name List	UID List		
Ultrasound Multi Frame Image Storage SOP Class (Retired)		Implicit VR Little Endian	1.2.840.10008.1.2		
Ultrasound Multi Frame Image Storage SOP Class	1.2.840.10008.5.1.4.1.1.3.1	Explicit VR Little Endian	1.2.840.10008.1.2.1	SCU	None
		Implicit VR Little Endian	1.2.840.10008.1.2		
MR Image Storage SOP Class	1.2.840.10008.5.1.4.1.1.4	Explicit VR Little Endian	1.2.840.10008.1.2.1	SCU	None
		Implicit VR Little Endian	1.2.840.10008.1.2		
Enhanced MR Image Storage SOP Class	1.2.840.10008.5.1.4.1.1.4.1	Explicit VR Little Endian	1.2.840.10008.1.2.1	SCU	None
		Implicit VR Little Endian	1.2.840.10008.1.2		
MR Spectroscopy Storage SOP Class	1.2.840.10008.5.1.4.1.1.4.2	Explicit VR Little Endian	1.2.840.10008.1.2.1	SCU	None
		Implicit VR Little Endian	1.2.840.10008.1.2		
Enhanced MR Color Image Storage SOP Class	1.2.840.10008.5.1.4.1.1.4.3	Explicit VR Little Endian	1.2.840.10008.1.2.1	SCU	None
		Implicit VR Little Endian	1.2.840.10008.1.2		
Legacy Converted Enhanced MR Image Storage SOP Class	1.2.840.10008.5.1.4.1.1.4.4	Explicit VR Little Endian	1.2.840.10008.1.2.1	SCU	None
		Implicit VR Little Endian	1.2.840.10008.1.2		
Nuclear Medicine Image Storage SOP Class (Retired)	1.2.840.10008.5.1.4.1.1.5	Explicit VR Little Endian	1.2.840.10008.1.2.1	SCU	None
		Implicit VR Little Endian	1.2.840.10008.1.2		
Ultrasound Image Storage SOP Class (Retired)	1.2.840.10008.5.1.4.1.1.6	Explicit VR Little Endian	1.2.840.10008.1.2.1	SCU	None
		Implicit VR Little Endian	1.2.840.10008.1.2		
Ultrasound Image Storage SOP Class	1.2.840.10008.5.1.4.1.1.6.1	Explicit VR Little Endian	1.2.840.10008.1.2.1	SCU	None

Presentation Context Table					
Abstract Syntax		Transfer Syntax		Role	Extended Negotiation
Name	UID	Name List	UID List		
		Implicit VR Little Endian	1.2.840.10008.1.2		
Enhanced US Volume Storage SOP Class	1.2.840.10008.5.1.4.1.1.6.2	Explicit VR Little Endian	1.2.840.10008.1.2.1	SCU	None
		Implicit VR Little Endian	1.2.840.10008.1.2		
Secondary Capture Image Storage SOP Class	1.2.840.10008.5.1.4.1.1.7	Explicit VR Little Endian	1.2.840.10008.1.2.1	SCU	None
		Implicit VR Little Endian	1.2.840.10008.1.2		
Multi Frame Single Bit Secondary Capture Image Storage SOP Class	1.2.840.10008.5.1.4.1.1.7.1	Explicit VR Little Endian	1.2.840.10008.1.2.1	SCU	None
		Implicit VR Little Endian	1.2.840.10008.1.2		
Multi Frame Grayscale Byte Secondary Capture Image Storage SOP Class	1.2.840.10008.5.1.4.1.1.7.2	Explicit VR Little Endian	1.2.840.10008.1.2.1	SCU	None
		Implicit VR Little Endian	1.2.840.10008.1.2		
Multi Frame Grayscale Word Secondary Capture Image Storage SOP Class	1.2.840.10008.5.1.4.1.1.7.3	Explicit VR Little Endian	1.2.840.10008.1.2.1	SCU	None
		Implicit VR Little Endian	1.2.840.10008.1.2		
Multi Frame True Color Secondary Capture Image Storage SOP Class	1.2.840.10008.5.1.4.1.1.7.4	Explicit VR Little Endian	1.2.840.10008.1.2.1	SCU	None
		Implicit VR Little Endian	1.2.840.10008.1.2		
Standalone Overlay Storage SOP Class	1.2.840.10008.5.1.4.1.1.8	Explicit VR Little Endian	1.2.840.10008.1.2.1	SCU	None
		Implicit VR Little Endian	1.2.840.10008.1.2		
Standalone Curve Storage SOP Class	1.2.840.10008.5.1.4.1.1.9	Explicit VR Little Endian	1.2.840.10008.1.2.1	SCU	None
		Implicit VR Little Endian	1.2.840.10008.1.2		
Waveform Storage Trial SOP Class	1.2.840.10008.5.1.4.1.1.9.1	Explicit VR Little Endian	1.2.840.10008.1.2.1	SCU	None

Presentation Context Table					
Abstract Syntax		Transfer Syntax		Role	Extended Negotiation
Name	UID	Name List	UID List		
		Implicit VR Little Endian	1.2.840.10008.1.2		
Twelve Lead ECG Waveform Storage SOP Class	1.2.840.10008.5.1.4.1.1.9.1.1	Explicit VR Little Endian	1.2.840.10008.1.2.1	SCU	None
		Implicit VR Little Endian	1.2.840.10008.1.2		
General ECG Waveform Storage SOP Class	1.2.840.10008.5.1.4.1.1.9.1.2	Explicit VR Little Endian	1.2.840.10008.1.2.1	SCU	None
		Implicit VR Little Endian	1.2.840.10008.1.2		
Ambulatory ECG Waveform Storage SOP Class	1.2.840.10008.5.1.4.1.1.9.1.3	Explicit VR Little Endian	1.2.840.10008.1.2.1	SCU	None
		Implicit VR Little Endian	1.2.840.10008.1.2		
Hemodynamic Waveform Storage SOP Class	1.2.840.10008.5.1.4.1.1.9.2.1	Explicit VR Little Endian	1.2.840.10008.1.2.1	SCU	None
		Implicit VR Little Endian	1.2.840.10008.1.2		
Cardiac Electrophysiology Waveform Storage SOP Class	1.2.840.10008.5.1.4.1.1.9.3.1	Explicit VR Little Endian	1.2.840.10008.1.2.1	SCU	None
		Implicit VR Little Endian	1.2.840.10008.1.2		
Basic Voice Audio Waveform Storage SOP Class	1.2.840.10008.5.1.4.1.1.9.4.1	Explicit VR Little Endian	1.2.840.10008.1.2.1	SCU	None
		Implicit VR Little Endian	1.2.840.10008.1.2		
General Audio Waveform Storage	1.2.840.10008.5.1.4.1.1.9.4.2	Explicit VR Little Endian	1.2.840.10008.1.2.1	SCU	None
		Implicit VR Little Endian	1.2.840.10008.1.2		
Arterial Pulse Waveform Storage SOP Class	1.2.840.10008.5.1.4.1.1.9.5.1	Explicit VR Little Endian	1.2.840.10008.1.2.1	SCU	None
		Implicit VR Little Endian	1.2.840.10008.1.2		
Respiratory Waveform Storage SOP Class	1.2.840.10008.5.1.4.1.1.9.6.1	Explicit VR Little Endian	1.2.840.10008.1.2.1	SCU	None

Presentation Context Table					
Abstract Syntax		Transfer Syntax		Role	Extended Negotiation
Name	UID	Name List	UID List		
		Implicit VR Little Endian	1.2.840.10008.1.2		
Standalone Modality LUT Storage SOP Class	1.2.840.10008.5.1.4.1.1.10	Explicit VR Little Endian	1.2.840.10008.1.2.1	SCU	None
		Implicit VR Little Endian	1.2.840.10008.1.2		
Standalone VOILUT Storage SOP Class	1.2.840.10008.5.1.4.1.1.11	Explicit VR Little Endian	1.2.840.10008.1.2.1	SCU	None
		Implicit VR Little Endian	1.2.840.10008.1.2		
Grayscale Softcopy Presentation State Storage SOP Class	1.2.840.10008.5.1.4.1.1.11.1	Explicit VR Little Endian	1.2.840.10008.1.2.1	SCU	None
		Implicit VR Little Endian	1.2.840.10008.1.2		
Color Softcopy Presentation State Storage SOP Class	1.2.840.10008.5.1.4.1.1.11.2	Explicit VR Little Endian	1.2.840.10008.1.2.1	SCU	None
		Implicit VR Little Endian	1.2.840.10008.1.2		
Pseudo Color Softcopy Presentation State Storage SOP Class	1.2.840.10008.5.1.4.1.1.11.3	Explicit VR Little Endian	1.2.840.10008.1.2.1	SCU	None
		Implicit VR Little Endian	1.2.840.10008.1.2		
Blending Softcopy Presentation State Storage SOP Class	1.2.840.10008.5.1.4.1.1.11.4	Explicit VR Little Endian	1.2.840.10008.1.2.1	SCU	None
		Implicit VR Little Endian	1.2.840.10008.1.2		
XA-XRF Grayscale Softcopy Presentation State Storage SOP Class	1.2.840.10008.5.1.4.1.1.11.5	Explicit VR Little Endian	1.2.840.10008.1.2.1	SCU	None
		Implicit VR Little Endian	1.2.840.10008.1.2		
Grayscale Planar MPR Volumetric Presentation State Storage SOP Class	1.2.840.10008.5.1.4.1.1.11.6	Explicit VR Little Endian	1.2.840.10008.1.2.1	SCU	None
		Implicit VR Little Endian	1.2.840.10008.1.2		
	1.2.840.10008.5.1.4.1.1.11.7	Explicit VR Little Endian	1.2.840.10008.1.2.1	SCU	None

Presentation Context Table					
Abstract Syntax		Transfer Syntax		Role	Extended Negotiation
Name	UID	Name List	UID List		
Compositing Planar MPR Volumetric Presentation State Storage SOP Class		Implicit VR Little Endian	1.2.840.10008.1.2		
Advanced Blending Presentation State Storage SOP Class	1.2.840.10008.5.1.4.1.1.11.8	Explicit VR Little Endian	1.2.840.10008.1.2.1	SCU	None
		Implicit VR Little Endian	1.2.840.10008.1.2		
Volume Rendering Volumetric Presentation State Storage SOP Class	1.2.840.10008.5.1.4.1.1.11.9	Explicit VR Little Endian	1.2.840.10008.1.2.1	SCU	None
		Implicit VR Little Endian	1.2.840.10008.1.2		
Segmented Volume Rendering Volumetric Presentation State Storage SOP Class	1.2.840.10008.5.1.4.1.1.11.10	Explicit VR Little Endian	1.2.840.10008.1.2.1	SCU	None
		Implicit VR Little Endian	1.2.840.10008.1.2		
Multiple Volume Rendering Volumetric Presentation State Storage SOP Class	1.2.840.10008.5.1.4.1.1.11.11	Explicit VR Little Endian	1.2.840.10008.1.2.1	SCU	None
		Implicit VR Little Endian	1.2.840.10008.1.2		
X-Ray Angiographic Image Storage SOP Class	1.2.840.10008.5.1.4.1.1.12.1	Explicit VR Little Endian	1.2.840.10008.1.2.1	SCU	None
		Implicit VR Little Endian	1.2.840.10008.1.2		
Enhanced XA Image Storage SOP Class	1.2.840.10008.5.1.4.1.1.12.1.1	Explicit VR Little Endian	1.2.840.10008.1.2.1	SCU	None
		Implicit VR Little Endian	1.2.840.10008.1.2		
X-Ray Radiofluoroscopic Image Storage SOP Class	1.2.840.10008.5.1.4.1.1.12.2	Explicit VR Little Endian	1.2.840.10008.1.2.1	SCU	None
		Implicit VR Little Endian	1.2.840.10008.1.2		
Enhanced XRF Image Storage SOP Class	1.2.840.10008.5.1.4.1.1.12.2.1	Explicit VR Little Endian	1.2.840.10008.1.2.1	SCU	None
		Implicit VR Little Endian	1.2.840.10008.1.2		
X-Ray Angiographic Bi Plane Image Storage SOP Class	1.2.840.10008.5.1.4.1.1.12.3	Explicit VR Little Endian	1.2.840.10008.1.2.1	SCU	None

Presentation Context Table					
Abstract Syntax		Transfer Syntax		Role	Extended Negotiation
Name	UID	Name List	UID List		
		Implicit VR Little Endian	1.2.840.10008.1.2		
X-Ray 3D Angiographic Image Storage SOP Class	1.2.840.10008.5.1.4.1.1.13.1.1	Explicit VR Little Endian	1.2.840.10008.1.2.1	SCU	None
		Implicit VR Little Endian	1.2.840.10008.1.2		
X-Ray 3D Craniofacial Image Storage SOP Class	1.2.840.10008.5.1.4.1.1.13.1.2	Explicit VR Little Endian	1.2.840.10008.1.2.1	SCU	None
		Implicit VR Little Endian	1.2.840.10008.1.2		
Breast Tomosynthesis Image Storage SOP Class	1.2.840.10008.5.1.4.1.1.13.1.3	Explicit VR Little Endian	1.2.840.10008.1.2.1	SCU	None
		Implicit VR Little Endian	1.2.840.10008.1.2		
Breast Projection X-Ray Image Storage – For Presentation SOP Class	1.2.840.10008.5.1.4.1.1.13.1.4	Explicit VR Little Endian	1.2.840.10008.1.2.1	SCU	None
		Implicit VR Little Endian	1.2.840.10008.1.2		
Breast Projection X-Ray Image Storage – For Processing SOP Class	1.2.840.10008.5.1.4.1.1.13.1.5	Explicit VR Little Endian	1.2.840.10008.1.2.1	SCU	None
		Implicit VR Little Endian	1.2.840.10008.1.2		
Intravascular Optical Coherence Tomography Image Storage – For Presentation SOP Class	1.2.840.10008.5.1.4.1.1.14.1	Explicit VR Little Endian	1.2.840.10008.1.2.1	SCU	None
		Implicit VR Little Endian	1.2.840.10008.1.2		
Intravascular Optical Coherence Tomography Image Storage – For Processing SOP Class	1.2.840.10008.5.1.4.1.1.14.2	Explicit VR Little Endian	1.2.840.10008.1.2.1	SCU	None
		Implicit VR Little Endian	1.2.840.10008.1.2		
Parametric Map Storage SOP Class	1.2.840.10008.5.1.4.1.1.30	Explicit VR Little Endian	1.2.840.10008.1.2.1	SCU	None
		Implicit VR Little Endian	1.2.840.10008.1.2		
MR Image Storage Zero Padded SOP Class (Retired)	1.2.840.10008.5.1.4.1.1.40	Explicit VR Little Endian	1.2.840.10008.1.2.1	SCU	None

Presentation Context Table					
Abstract Syntax		Transfer Syntax		Role	Extended Negotiation
Name	UID	Name List	UID List		
		Implicit VR Little Endian	1.2.840.10008.1.2		
Raw Data Storage SOP Class	1.2.840.10008.5.1.4.1.1.66	Explicit VR Little Endian	1.2.840.10008.1.2.1	SCU	None
		Implicit VR Little Endian	1.2.840.10008.1.2		
Spatial Registration Storage SOP Class	1.2.840.10008.5.1.4.1.1.66.1	Explicit VR Little Endian	1.2.840.10008.1.2.1	SCU	None
		Implicit VR Little Endian	1.2.840.10008.1.2		
Spatial Fiducials Storage SOP Class	1.2.840.10008.5.1.4.1.1.66.2	Explicit VR Little Endian	1.2.840.10008.1.2.1	SCU	None
		Implicit VR Little Endian	1.2.840.10008.1.2		
Deformable Spatial Registration Storage SOP Class	1.2.840.10008.5.1.4.1.1.66.3	Explicit VR Little Endian	1.2.840.10008.1.2.1	SCU	None
		Implicit VR Little Endian	1.2.840.10008.1.2		
Segmentation Storage SOP Class	1.2.840.10008.5.1.4.1.1.66.4	Explicit VR Little Endian	1.2.840.10008.1.2.1	SCU	None
		Implicit VR Little Endian	1.2.840.10008.1.2		
Surface Segmentation Storage SOP Class	1.2.840.10008.5.1.4.1.1.66.5	Explicit VR Little Endian	1.2.840.10008.1.2.1	SCU	None
		Implicit VR Little Endian	1.2.840.10008.1.2		
Tractography Results Storage SOP Class	1.2.840.10008.5.1.4.1.1.66.6	Explicit VR Little Endian	1.2.840.10008.1.2.1	SCU	None
		Implicit VR Little Endian	1.2.840.10008.1.2		
Real World Value Mapping Storage SOP Class	1.2.840.10008.5.1.4.1.1.67	Explicit VR Little Endian	1.2.840.10008.1.2.1	SCU	None
		Implicit VR Little Endian	1.2.840.10008.1.2		
Surface Scan Mesh Storage SOP Class	1.2.840.10008.5.1.4.1.1.68.1	Explicit VR Little Endian	1.2.840.10008.1.2.1	SCU	None

Presentation Context Table					
Abstract Syntax		Transfer Syntax		Role	Extended Negotiation
Name	UID	Name List	UID List		
		Implicit VR Little Endian	1.2.840.10008.1.2		
Surface Scan Point Cloud Storage SOP Class	1.2.840.10008.5.1.4.1.1.68.2	Explicit VR Little Endian	1.2.840.10008.1.2.1	SCU	None
		Implicit VR Little Endian	1.2.840.10008.1.2		
VL Image Storage Trial SOP Class	1.2.840.10008.5.1.4.1.1.77.1	Explicit VR Little Endian	1.2.840.10008.1.2.1	SCU	None
		Implicit VR Little Endian	1.2.840.10008.1.2		
VL Multi Frame Image Storage Trial SOP Class	1.2.840.10008.5.1.4.1.1.77.2	Explicit VR Little Endian	1.2.840.10008.1.2.1	SCU	None
		Implicit VR Little Endian	1.2.840.10008.1.2		
VL Endoscopic Image Storage SOP Class	1.2.840.10008.5.1.4.1.1.77.1.1	Explicit VR Little Endian	1.2.840.10008.1.2.1	SCU	None
		Implicit VR Little Endian	1.2.840.10008.1.2		
Video Endoscopic Image Storage SOP Class	1.2.840.10008.5.1.4.1.1.77.1.1.1	Explicit VR Little Endian	1.2.840.10008.1.2.1	SCU	None
		Implicit VR Little Endian	1.2.840.10008.1.2		
VL Microscopic Image Storage SOP Class	1.2.840.10008.5.1.4.1.1.77.1.2	Explicit VR Little Endian	1.2.840.10008.1.2.1	SCU	None
		Implicit VR Little Endian	1.2.840.10008.1.2		
Video Microscopic Image Storage SOP Class	1.2.840.10008.5.1.4.1.1.77.1.2.1	Explicit VR Little Endian	1.2.840.10008.1.2.1	SCU	None
		Implicit VR Little Endian	1.2.840.10008.1.2		
VL Slide Coordinates Microscopic Image Storage SOP Class	1.2.840.10008.5.1.4.1.1.77.1.3	Explicit VR Little Endian	1.2.840.10008.1.2.1	SCU	None
		Implicit VR Little Endian	1.2.840.10008.1.2		
VL Photographic Image Storage SOP Class	1.2.840.10008.5.1.4.1.1.77.1.4	Explicit VR Little Endian	1.2.840.10008.1.2.1	SCU	None

Presentation Context Table					
Abstract Syntax		Transfer Syntax		Role	Extended Negotiation
Name	UID	Name List	UID List		
		Implicit VR Little Endian	1.2.840.10008.1.2		
Video Photographic Image Storage SOP Class	1.2.840.10008.5.1.4.1.1.77.1.4.1	Explicit VR Little Endian	1.2.840.10008.1.2.1	SCU	None
		Implicit VR Little Endian	1.2.840.10008.1.2		
Ophthalmic Photography 8 Bit Image Storage SOP Class	1.2.840.10008.5.1.4.1.1.77.1.5.1	Explicit VR Little Endian	1.2.840.10008.1.2.1	SCU	None
		Implicit VR Little Endian	1.2.840.10008.1.2		
Ophthalmic Photography 16 Bit Image Storage SOP Class	1.2.840.10008.5.1.4.1.1.77.1.5.2	Explicit VR Little Endian	1.2.840.10008.1.2.1	SCU	None
		Implicit VR Little Endian	1.2.840.10008.1.2		
Stereometric Relationship Storage SOP Class	1.2.840.10008.5.1.4.1.1.77.1.5.3	Explicit VR Little Endian	1.2.840.10008.1.2.1	SCU	None
		Implicit VR Little Endian	1.2.840.10008.1.2		
Ophthalmic Tomography Image Storage SOP Class	1.2.840.10008.5.1.4.1.1.77.1.5.4	Explicit VR Little Endian	1.2.840.10008.1.2.1	SCU	None
		Implicit VR Little Endian	1.2.840.10008.1.2		
Wide Field Ophthalmic Photography Stereographic Projection Image Storage SOP Class	1.2.840.10008.5.1.4.1.1.77.1.5.5	Explicit VR Little Endian	1.2.840.10008.1.2.1	SCU	None
		Implicit VR Little Endian	1.2.840.10008.1.2		
Wide Field Ophthalmic Photography 3D Coordinates Image Storage SOP Class	1.2.840.10008.5.1.4.1.1.77.1.5.6	Explicit VR Little Endian	1.2.840.10008.1.2.1	SCU	None
		Implicit VR Little Endian	1.2.840.10008.1.2		
Ophthalmic Optical Coherence Tomography En Face Image Storage SOP Class	1.2.840.10008.5.1.4.1.1.77.1.5.7	Explicit VR Little Endian	1.2.840.10008.1.2.1	SCU	None
		Implicit VR Little Endian	1.2.840.10008.1.2		
Ophthalmic Optical Coherence Tomography B-	1.2.840.10008.5.1.4.1.1.77.1.5.8	Explicit VR Little Endian	1.2.840.10008.1.2.1	SCU	None

Presentation Context Table					
Abstract Syntax		Transfer Syntax		Role	Extended Negotiation
Name	UID	Name List	UID List		
scan Volume Analysis Storage SOP Class		Implicit VR Little Endian	1.2.840.10008.1.2		
VL Whole Slide Microscopy Image Storage SOP Class	1.2.840.10008.5.1.4.1.1.77.1.6	Explicit VR Little Endian	1.2.840.10008.1.2.1	SCU	None
		Implicit VR Little Endian	1.2.840.10008.1.2		
Lensometry Measurements Storage SOP Class	1.2.840.10008.5.1.4.1.1.78.1	Explicit VR Little Endian	1.2.840.10008.1.2.1	SCU	None
		Implicit VR Little Endian	1.2.840.10008.1.2		
Autorefraction Measurements Storage SOP Class	1.2.840.10008.5.1.4.1.1.78.2	Explicit VR Little Endian	1.2.840.10008.1.2.1	SCU	None
		Implicit VR Little Endian	1.2.840.10008.1.2		
Keratometry Measurements Storage SOP Class	1.2.840.10008.5.1.4.1.1.78.3	Explicit VR Little Endian	1.2.840.10008.1.2.1	SCU	None
		Implicit VR Little Endian	1.2.840.10008.1.2		
Subjective Refraction Measurements Storage SOP Class	1.2.840.10008.5.1.4.1.1.78.4	Explicit VR Little Endian	1.2.840.10008.1.2.1	SCU	None
		Implicit VR Little Endian	1.2.840.10008.1.2		
Visual Acuity Measurements Storage SOP Class	1.2.840.10008.5.1.4.1.1.78.5	Explicit VR Little Endian	1.2.840.10008.1.2.1	SCU	None
		Implicit VR Little Endian	1.2.840.10008.1.2		
Spectacle Prescription Report Storage SOP Class	1.2.840.10008.5.1.4.1.1.78.6	Explicit VR Little Endian	1.2.840.10008.1.2.1	SCU	None
		Implicit VR Little Endian	1.2.840.10008.1.2		
Ophthalmic Axial Measurements Storage SOP Class	1.2.840.10008.5.1.4.1.1.78.7	Explicit VR Little Endian	1.2.840.10008.1.2.1	SCU	None
		Implicit VR Little Endian	1.2.840.10008.1.2		
	1.2.840.10008.5.1.4.1.1.78.8	Explicit VR Little Endian	1.2.840.10008.1.2.1	SCU	None

Presentation Context Table					
Abstract Syntax		Transfer Syntax		Role	Extended Negotiation
Name	UID	Name List	UID List		
Intraocular Lens Calculations Storage SOP Class		Implicit VR Little Endian	1.2.840.10008.1.2		
Macular Grid Thickness and Volume Report Storage SOP Class	1.2.840.10008.5.1.4.1.1.79.1	Explicit VR Little Endian	1.2.840.10008.1.2.1	SCU	None
		Implicit VR Little Endian	1.2.840.10008.1.2		
Ophthalmic Visual Field Static Perimetry Measurements Storage SOP Class	1.2.840.10008.5.1.4.1.1.80.1	Explicit VR Little Endian	1.2.840.10008.1.2.1	SCU	None
		Implicit VR Little Endian	1.2.840.10008.1.2		
Ophthalmic Thickness Map Storage SOP Class	1.2.840.10008.5.1.4.1.1.81.1	Explicit VR Little Endian	1.2.840.10008.1.2.1	SCU	None
		Implicit VR Little Endian	1.2.840.10008.1.2		
Corneal Topography Map Storage SOP Class	1.2.840.10008.5.1.4.1.1.82.1	Explicit VR Little Endian	1.2.840.10008.1.2.1	SCU	None
		Implicit VR Little Endian	1.2.840.10008.1.2		
Text SR Storage Trial SOP Class	1.2.840.10008.5.1.4.1.1.88.1	Explicit VR Little Endian	1.2.840.10008.1.2.1	SCU	None
		Implicit VR Little Endian	1.2.840.10008.1.2		
Audio SR Storage Trial SOP Class	1.2.840.10008.5.1.4.1.1.88.2	Explicit VR Little Endian	1.2.840.10008.1.2.1	SCU	None
		Implicit VR Little Endian	1.2.840.10008.1.2		
Detail SR Storage Trial SOP Class	1.2.840.10008.5.1.4.1.1.88.3	Explicit VR Little Endian	1.2.840.10008.1.2.1	SCU	None
		Implicit VR Little Endian	1.2.840.10008.1.2		
Comprehensive SR Storage Trial SOP Class	1.2.840.10008.5.1.4.1.1.88.4	Explicit VR Little Endian	1.2.840.10008.1.2.1	SCU	None
		Implicit VR Little Endian	1.2.840.10008.1.2		
Basic Text SR Storage SOP Class	1.2.840.10008.5.1.4.1.1.88.11	Explicit VR Little Endian	1.2.840.10008.1.2.1	SCU	None

Presentation Context Table					
Abstract Syntax		Transfer Syntax		Role	Extended Negotiation
Name	UID	Name List	UID List		
		Implicit VR Little Endian	1.2.840.10008.1.2		
Enhanced SR Storage SOP Class	1.2.840.10008.5.1.4.1.1.88.22	Explicit VR Little Endian	1.2.840.10008.1.2.1	SCU	None
		Implicit VR Little Endian	1.2.840.10008.1.2		
Comprehensive SR Storage SOP Class	1.2.840.10008.5.1.4.1.1.88.33	Explicit VR Little Endian	1.2.840.10008.1.2.1	SCU	None
		Implicit VR Little Endian	1.2.840.10008.1.2		
Comprehensive 3D SR Storage SOP Class	1.2.840.10008.5.1.4.1.1.88.34	Explicit VR Little Endian	1.2.840.10008.1.2.1	SCU	None
		Implicit VR Little Endian	1.2.840.10008.1.2		
Extensible SR Storage SOP Class	1.2.840.10008.5.1.4.1.1.88.35	Explicit VR Little Endian	1.2.840.10008.1.2.1	SCU	None
		Implicit VR Little Endian	1.2.840.10008.1.2		
Procedure Log Storage SOP Class	1.2.840.10008.5.1.4.1.1.88.40	Explicit VR Little Endian	1.2.840.10008.1.2.1	SCU	None
		Implicit VR Little Endian	1.2.840.10008.1.2		
Mammography CAD SR Storage SOP Class	1.2.840.10008.5.1.4.1.1.88.50	Explicit VR Little Endian	1.2.840.10008.1.2.1	SCU	None
		Implicit VR Little Endian	1.2.840.10008.1.2		
Key Object Selection Document Storage SOP Class	1.2.840.10008.5.1.4.1.1.88.59	Explicit VR Little Endian	1.2.840.10008.1.2.1	SCU	None
		Implicit VR Little Endian	1.2.840.10008.1.2		
Chest CAD SR Storage SOP Class	1.2.840.10008.5.1.4.1.1.88.65	Explicit VR Little Endian	1.2.840.10008.1.2.1	SCU	None
		Implicit VR Little Endian	1.2.840.10008.1.2		
X-Ray Radiation Dose SR Storage SOP Class	1.2.840.10008.5.1.4.1.1.88.67	Explicit VR Little Endian	1.2.840.10008.1.2.1	SCU	None

Presentation Context Table					
Abstract Syntax		Transfer Syntax		Role	Extended Negotiation
Name	UID	Name List	UID List		
		Implicit VR Little Endian	1.2.840.10008.1.2		
Radiopharmaceutical Radiation Dose SR Storage SOP Class	1.2.840.10008.5.1.4.1.1.88.68	Explicit VR Little Endian	1.2.840.10008.1.2.1	SCU	None
		Implicit VR Little Endian	1.2.840.10008.1.2		
Colon CAD SR Storage SOP Class	1.2.840.10008.5.1.4.1.1.88.69	Explicit VR Little Endian	1.2.840.10008.1.2.1	SCU	None
		Implicit VR Little Endian	1.2.840.10008.1.2		
Implantation Plan SR Storage SOP Class	1.2.840.10008.5.1.4.1.1.88.70	Explicit VR Little Endian	1.2.840.10008.1.2.1	SCU	None
		Implicit VR Little Endian	1.2.840.10008.1.2		
Acquisition Context SR Storage SOP Class	1.2.840.10008.5.1.4.1.1.88.71	Explicit VR Little Endian	1.2.840.10008.1.2.1	SCU	None
		Implicit VR Little Endian	1.2.840.10008.1.2		
Simplified Adult Echo SR Storage SOP Class	1.2.840.10008.5.1.4.1.1.88.72	Explicit VR Little Endian	1.2.840.10008.1.2.1	SCU	None
		Implicit VR Little Endian	1.2.840.10008.1.2		
Patient Radiation Dose SR Storage SOP Class	1.2.840.10008.5.1.4.1.1.88.73	Explicit VR Little Endian	1.2.840.10008.1.2.1	SCU	None
		Implicit VR Little Endian	1.2.840.10008.1.2		
Content Assessment Results Storage SOP Class	1.2.840.10008.5.1.4.1.1.90.1	Explicit VR Little Endian	1.2.840.10008.1.2.1	SCU	None
		Implicit VR Little Endian	1.2.840.10008.1.2		
Encapsulated PDF Storage SOP Class	1.2.840.10008.5.1.4.1.1.104.1	Explicit VR Little Endian	1.2.840.10008.1.2.1	SCU	None
		Implicit VR Little Endian	1.2.840.10008.1.2		
Encapsulated CDA Storage SOP Class	1.2.840.10008.5.1.4.1.1.104.2	Explicit VR Little Endian	1.2.840.10008.1.2.1	SCU	None

Presentation Context Table					
Abstract Syntax		Transfer Syntax		Role	Extended Negotiation
Name	UID	Name List	UID List		
		Implicit VR Little Endian	1.2.840.10008.1.2		
Encapsulated STL Storage SOP Class	1.2.840.10008.5.1.4.1.1.104.3	Explicit VR Little Endian	1.2.840.10008.1.2.1	SCU	None
		Implicit VR Little Endian	1.2.840.10008.1.2		
Positron Emission Tomography Image Storage SOP Class	1.2.840.10008.5.1.4.1.1.128	Explicit VR Little Endian	1.2.840.10008.1.2.1	SCU	None
		Implicit VR Little Endian	1.2.840.10008.1.2		
Legacy Converted Enhanced PET Image Storage SOP Class	1.2.840.10008.5.1.4.1.1.128.1	Explicit VR Little Endian	1.2.840.10008.1.2.1	SCU	None
		Implicit VR Little Endian	1.2.840.10008.1.2		
Standalone PET Curve Storage SOP Class	1.2.840.10008.5.1.4.1.1.129	Explicit VR Little Endian	1.2.840.10008.1.2.1	SCU	None
		Implicit VR Little Endian	1.2.840.10008.1.2		
Enhanced PET Image Storage SOP Class	1.2.840.10008.5.1.4.1.1.130	Explicit VR Little Endian	1.2.840.10008.1.2.1	SCU	None
		Implicit VR Little Endian	1.2.840.10008.1.2		
Basic Structured Display Storage SOP Class	1.2.840.10008.5.1.4.1.1.131	Explicit VR Little Endian	1.2.840.10008.1.2.1	SCU	None
		Implicit VR Little Endian	1.2.840.10008.1.2		
CT Defined Procedure Protocol Storage SOP Class	1.2.840.10008.5.1.4.1.1.200.1	Explicit VR Little Endian	1.2.840.10008.1.2.1	SCU	None
		Implicit VR Little Endian	1.2.840.10008.1.2		
CT Performed Procedure Protocol Storage SOP Class	1.2.840.10008.5.1.4.1.1.200.2	Explicit VR Little Endian	1.2.840.10008.1.2.1	SCU	None
		Implicit VR Little Endian	1.2.840.10008.1.2		
Protocol Approval Storage SOP Class	1.2.840.10008.5.1.4.1.1.200.3	Explicit VR Little Endian	1.2.840.10008.1.2.1	SCU	None

Presentation Context Table					
Abstract Syntax		Transfer Syntax		Role	Extended Negotiation
Name	UID	Name List	UID List		
		Implicit VR Little Endian	1.2.840.10008.1.2		
RT Image Storage SOP Class	1.2.840.10008.5.1.4.1.1.481.1	Explicit VR Little Endian	1.2.840.10008.1.2.1	SCU	None
		Implicit VR Little Endian	1.2.840.10008.1.2		
RT Dose Storage SOP Class	1.2.840.10008.5.1.4.1.1.481.2	Explicit VR Little Endian	1.2.840.10008.1.2.1	SCU	None
		Implicit VR Little Endian	1.2.840.10008.1.2		
RT Structure Set Storage SOP Class	1.2.840.10008.5.1.4.1.1.481.3	Explicit VR Little Endian	1.2.840.10008.1.2.1	SCU	None
		Implicit VR Little Endian	1.2.840.10008.1.2		
RT Beams Treatment Record Storage SOP Class	1.2.840.10008.5.1.4.1.1.481.4	Explicit VR Little Endian	1.2.840.10008.1.2.1	SCU	None
		Implicit VR Little Endian	1.2.840.10008.1.2		
RT Plan Storage SOP Class	1.2.840.10008.5.1.4.1.1.481.5	Explicit VR Little Endian	1.2.840.10008.1.2.1	SCU	None
		Implicit VR Little Endian	1.2.840.10008.1.2		
RT Brachy Treatment Record Storage SOP Class	1.2.840.10008.5.1.4.1.1.481.6	Explicit VR Little Endian	1.2.840.10008.1.2.1	SCU	None
		Implicit VR Little Endian	1.2.840.10008.1.2		
RT Treatment Summary Record Storage SOP Class	1.2.840.10008.5.1.4.1.1.481.7	Explicit VR Little Endian	1.2.840.10008.1.2.1	SCU	None
		Implicit VR Little Endian	1.2.840.10008.1.2		
RT Ion Plan Storage SOP Class	1.2.840.10008.5.1.4.1.1.481.8	Explicit VR Little Endian	1.2.840.10008.1.2.1	SCU	None
		Implicit VR Little Endian	1.2.840.10008.1.2		
RT Ion Beams Treatment Record Storage SOP Class	1.2.840.10008.5.1.4.1.1.481.9	Explicit VR Little Endian	1.2.840.10008.1.2.1	SCU	None

Presentation Context Table					
Abstract Syntax		Transfer Syntax		Role	Extended Negotiation
Name	UID	Name List	UID List		
		Implicit VR Little Endian	1.2.840.10008.1.2		
RT Beams Delivery Instruction Storage Trial SOP Class	1.2.840.10008.5.1.4.34.1	Explicit VR Little Endian	1.2.840.10008.1.2.1	SCU	None
		Implicit VR Little Endian	1.2.840.10008.1.2		
RT Beams Delivery Instruction Storage SOP Class	1.2.840.10008.5.1.4.34.7	Explicit VR Little Endian	1.2.840.10008.1.2.1	SCU	None
		Implicit VR Little Endian	1.2.840.10008.1.2		
RT Brachy Application Setup Delivery Instruction Storage SOP Class	1.2.840.10008.5.1.4.34.10	Explicit VR Little Endian	1.2.840.10008.1.2.1	SCU	None
		Implicit VR Little Endian	1.2.840.10008.1.2		
Hanging Protocol Storage SOP Class	1.2.840.10008.5.1.4.38.1	Explicit VR Little Endian	1.2.840.10008.1.2.1	SCU	None
		Implicit VR Little Endian	1.2.840.10008.1.2		
Color Palette Storage SOP Class	1.2.840.10008.5.1.4.39.1	Explicit VR Little Endian	1.2.840.10008.1.2.1	SCU	None
		Implicit VR Little Endian	1.2.840.10008.1.2		
Generic Implant Template Storage SOP Class	1.2.840.10008.5.1.4.43.1	Explicit VR Little Endian	1.2.840.10008.1.2.1	SCU	None
		Implicit VR Little Endian	1.2.840.10008.1.2		
Implant Assembly Template Storage SOP Class	1.2.840.10008.5.1.4.44.1	Explicit VR Little Endian	1.2.840.10008.1.2.1	SCU	None
		Implicit VR Little Endian	1.2.840.10008.1.2		
Implant Template Group Storage SOP Class	1.2.840.10008.5.1.4.45.1	Explicit VR Little Endian	1.2.840.10008.1.2.1	SCU	None
		Implicit VR Little Endian	1.2.840.10008.1.2		
Stored Print Storage SOP Class (Retired)	1.2.840.10008.5.1.1.27	Explicit VR Little Endian	1.2.840.10008.1.2.1	SCU	None

Presentation Context Table					
Abstract Syntax		Transfer Syntax		Role	Extended Negotiation
Name	UID	Name List	UID List		
		Implicit VR Little Endian	1.2.840.10008.1.2		

4.2.4.3.1.3. SOP Specific Conformance for Storage SOP Classes

This section and sub-section include the manufacturer SOP and Dataset specific information as well the status codes and their corresponding behavior.

4.2.4.3.1.3.1. Dataset Specific Conformance for C-STORE-RQ

Detail regarding the Dataset Specific response behavior will be reported in this section.
This includes the dataset specific behavior, i.e. error codes, error and exception handling, time-outs, etc.

Table 72: Status Response

Service Status	Error Code	Further Meaning	Behavior
Success	0000	Successful stored	Log; Release association.
Failure	A7xx	Refused: Out of Resources	Log; Release association.
	A9xx	Error: Data Set does not match SOP Class	Log; Release association.
	Cxxx	Error: cannot understand	Log; Release association.
	0210	Error: Duplicate Invocation	Log; Release association.
	0117	Error: Invalid Object Instance	Log; Release association.
	0212	Error: Mistyped Argument	Log; Release association.
Warning	B000	Coercion of Data Elements	Log; Release association.
	B007	Data Set does not match SOP Class	Log; Release association.
	B006	Elements Discarded	Log; Release association.
	0107	Attribute List Error	Log; Release association.

4.2.4.4. Association Acceptance Policy

The Application Entity may reject Association attempts as shown in the table below.

Table 73: Association Reject Reasons

Result	Source	Reason/Diagnosis	Behavior
1 - rejected permanent	1 - DICOM UL service-user	1 - no-reason-given	The user is informed. Details are logged in central log file.
		2 - application-context-name-not-supported	The user is informed. Details are logged in central log file.

Result	Source	Reason/Diagnosis	Behavior
		3 - calling-AE-title-not-recognized	The user is informed. Details are logged in central log file.
		7 - called-AE-title-not-recognized	The user is informed. Details are logged in central log file.
	2 - DICOM UL service provider (ACSE related function)	1 - no-reason-given	The user is informed. Details are logged in central log file.
		2 - protocol-version-not-supported	The user is informed. Details are logged in central log file.
	3 - DICOM UL service provider (Presentation related function)	1 - temporary-congestion	The user is informed. Details are logged in central log file.
		2 - local-limit-exceeded	The user is informed. Details are logged in central log file.
2 - rejected-transient	1 - DICOM UL service-user	1 - no-reason-given	The user is informed. Details are logged in central log file.
		2 - application-context-name-not-supported	The user is informed. Details are logged in central log file.
		3 - calling-AE-title-not-recognized	The user is informed. Details are logged in central log file.
		7 - called-AE-title-not-recognized	The user is informed. Details are logged in central log file.
	2 - DICOM UL service provider (ACSE related function)	1 - no-reason-given	The user is informed. Details are logged in central log file.
		2 - protocol-version-not-supported	The user is informed. Details are logged in central log file.
	3 - DICOM UL service provider (Presentation related function)	1 - temporary-congestion	The user is informed. Details are logged in central log file.
		2 - local-limit-exceeded	The user is informed. Details are logged in central log file.

The behavior of the AE for sending an Association abort is summarized in next table.

Table 74: Association Abort Policies

Source	Reason/Diagnosis	Behavior
0 - DICOM UL service-user (initiated abort)	0 - reason-not-specified	When received, terminates the connection and logs the event.
2 - DICOM UL service-provider (initiated abort)	0 - reason-not-specified	When received, terminates the connection and logs the event.
	1 - unrecognized-PDU	When received, terminates the connection and logs the event.
	2 - unexpected-PDU	When received, terminates the connection and logs the event.
	4 - unrecognized-PDU parameter	When received, terminates the connection and logs the event.
	5 - unexpected-PDU parameter	When received, terminates the connection and logs the event.
	6 - invalid-PDU-parameter value	When received, terminates the connection and logs the event.

4.2.4.4.1. (Real-World) Activity – Image Import

4.2.4.4.1.1. Description and Sequencing of Activities

The IBE accepts associations from configured systems that wish to store images in the IBE database using the C-STORE command.

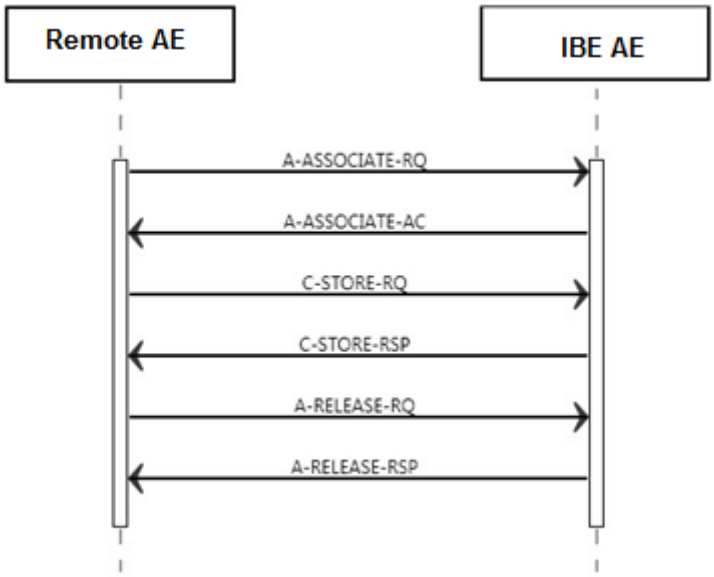

Figure 12: (Real World) Activity - Import Images

4.2.4.4.1.2. Accepted Presentation Contexts

The presentation contexts are defined in the next table.

Table 75: Acceptable Presentation Contexts for (Real-World) Activity – Image Import

Presentation Context Table					
Abstract Syntax		Transfer Syntax		Role	Extended Negotiation
Name	UID	Name List	UID List		
Computed Radiography Image Storage SOP Class	1.2.840.10008.5.1.4.1.1.1	Explicit VR Little Endian	1.2.840.10008.1.2.1	SCP	None
		Implicit VR Little Endian	1.2.840.10008.1.2		
Digital Mammography X-Ray Image Storage - Pres. SOP	1.2.840.10008.5.1.4.1.1.2	Explicit VR Little Endian	1.2.840.10008.1.2.1	SCP	None
		Implicit VR Little Endian	1.2.840.10008.1.2		
Digital Mammography X-Ray Image Storage - Proc. SOP	1.2.840.10008.5.1.4.1.1.2.1	Explicit VR Little Endian	1.2.840.10008.1.2.1	SCP	None
		Implicit VR Little Endian	1.2.840.10008.1.2		
Digital X-Ray Image Storage - For Pres. SOP	1.2.840.10008.5.1.4.1.1.1	Explicit VR Little Endian	1.2.840.10008.1.2.1	SCP	None
		Implicit VR Little Endian	1.2.840.10008.1.2		
Digital X-Ray Image Storage - For Proc. SOP	1.2.840.10008.5.1.4.1.1.1.1	Explicit VR Little Endian	1.2.840.10008.1.2.1	SCP	None
		Implicit VR Little Endian	1.2.840.10008.1.2		
Digital Intra Oral X-Ray Image Storage – For Presentation SOP Class	1.2.840.10008.5.1.4.1.1.3	Explicit VR Little Endian	1.2.840.10008.1.2.1	SCP	None
		Implicit VR Little Endian	1.2.840.10008.1.2		
Digital Intra Oral X-Ray Image Storage – For Processing SOP Class	1.2.840.10008.5.1.4.1.1.3.1	Explicit VR Little Endian	1.2.840.10008.1.2.1	SCP	None
		Implicit VR Little Endian	1.2.840.10008.1.2		
CT Image Storage SOP Class	1.2.840.10008.5.1.4.1.1.2	Explicit VR Little Endian	1.2.840.10008.1.2.1	SCP	None
		Implicit VR Little Endian	1.2.840.10008.1.2		

Presentation Context Table					
Abstract Syntax		Transfer Syntax		Role	Extended Negotiation
Name	UID	Name List	UID List		
Enhanced CT Image Storage SOP Class	1.2.840.10008.5.1.4.1.1.2.1	Explicit VR Little Endian	1.2.840.10008.1.2.1	SCP	None
		Implicit VR Little Endian	1.2.840.10008.1.2		
Hardcopy Grayscale Image Storage SOP Class	1.2.840.10008.5.1.1.29	Explicit VR Little Endian	1.2.840.10008.1.2.1	SCP	None
		Implicit VR Little Endian	1.2.840.10008.1.2		
Hardcopy Color Image Storage SOP Class	1.2.840.10008.5.1.1.30	Explicit VR Little Endian	1.2.840.10008.1.2.1	SCP	None
		Implicit VR Little Endian	1.2.840.10008.1.2		
Legacy Converted Enhanced CT Image Storage SOP Class	1.2.840.10008.5.1.4.1.1.2.2	Explicit VR Little Endian	1.2.840.10008.1.2.1	SCP	None
		Implicit VR Little Endian	1.2.840.10008.1.2		
Ultrasound Multi Frame Image Storage SOP Class (Retired)	1.2.840.10008.5.1.4.1.1.3	Explicit VR Little Endian	1.2.840.10008.1.2.1	SCP	None
		Implicit VR Little Endian	1.2.840.10008.1.2		
Ultrasound Multi Frame Image Storage SOP Class	1.2.840.10008.5.1.4.1.1.3.1	Explicit VR Little Endian	1.2.840.10008.1.2.1	SCP	None
		Implicit VR Little Endian	1.2.840.10008.1.2		
MR Image Storage SOP Class	1.2.840.10008.5.1.4.1.1.4	Explicit VR Little Endian	1.2.840.10008.1.2.1	SCP	None
		Implicit VR Little Endian	1.2.840.10008.1.2		
Enhanced MR Image Storage SOP Class	1.2.840.10008.5.1.4.1.1.4.1	Explicit VR Little Endian	1.2.840.10008.1.2.1	SCP	None
		Implicit VR Little Endian	1.2.840.10008.1.2		
MR Spectroscopy Storage SOP Class	1.2.840.10008.5.1.4.1.1.4.2	Explicit VR Little Endian	1.2.840.10008.1.2.1	SCP	None
		Implicit VR Little Endian	1.2.840.10008.1.2		

Presentation Context Table					
Abstract Syntax		Transfer Syntax		Role	Extended Negotiation
Name	UID	Name List	UID List		
Enhanced MR Color Image Storage SOP Class	1.2.840.10008.5.1.4.1.1.4.3	Explicit VR Little Endian	1.2.840.10008.1.2.1	SCP	None
		Implicit VR Little Endian	1.2.840.10008.1.2		
Legacy Converted Enhanced MR Image Storage SOP Class	1.2.840.10008.5.1.4.1.1.4.4	Explicit VR Little Endian	1.2.840.10008.1.2.1	SCP	None
		Implicit VR Little Endian	1.2.840.10008.1.2		
Nuclear Medicine Image Storage SOP Class (Retired)	1.2.840.10008.5.1.4.1.1.5	Explicit VR Little Endian	1.2.840.10008.1.2.1	SCP	None
		Implicit VR Little Endian	1.2.840.10008.1.2		
Ultrasound Image Storage SOP Class (Retired)	1.2.840.10008.5.1.4.1.1.6	Explicit VR Little Endian	1.2.840.10008.1.2.1	SCP	None
		Implicit VR Little Endian	1.2.840.10008.1.2		
Ultrasound Image Storage SOP Class	1.2.840.10008.5.1.4.1.1.6.1	Explicit VR Little Endian	1.2.840.10008.1.2.1	SCP	None
		Implicit VR Little Endian	1.2.840.10008.1.2		
Enhanced US Volume Storage SOP Class	1.2.840.10008.5.1.4.1.1.6.2	Explicit VR Little Endian	1.2.840.10008.1.2.1	SCP	None
		Implicit VR Little Endian	1.2.840.10008.1.2		
Secondary Capture Image Storage SOP Class	1.2.840.10008.5.1.4.1.1.7	Explicit VR Little Endian	1.2.840.10008.1.2.1	SCP	None
		Implicit VR Little Endian	1.2.840.10008.1.2		
Multi Frame Single Bit Secondary Capture Image Storage SOP Class	1.2.840.10008.5.1.4.1.1.7.1	Explicit VR Little Endian	1.2.840.10008.1.2.1	SCP	None
		Implicit VR Little Endian	1.2.840.10008.1.2		
Multi Frame Grayscale Byte Secondary Capture Image Storage SOP Class	1.2.840.10008.5.1.4.1.1.7.2	Explicit VR Little Endian	1.2.840.10008.1.2.1	SCP	None
		Implicit VR Little Endian	1.2.840.10008.1.2		

Presentation Context Table					
Abstract Syntax		Transfer Syntax		Role	Extended Negotiation
Name	UID	Name List	UID List		
Multi Frame Grayscale Word Secondary Capture Image Storage SOP Class	1.2.840.10008.5.1.4.1.1.7.3	Explicit VR Little Endian	1.2.840.10008.1.2.1	SCP	None
		Implicit VR Little Endian	1.2.840.10008.1.2		
Multi Frame True Color Secondary Capture Image Storage SOP Class	1.2.840.10008.5.1.4.1.1.7.4	Explicit VR Little Endian	1.2.840.10008.1.2.1	SCP	None
		Implicit VR Little Endian	1.2.840.10008.1.2		
Standalone Overlay Storage SOP Class	1.2.840.10008.5.1.4.1.1.8	Explicit VR Little Endian	1.2.840.10008.1.2.1	SCP	None
		Implicit VR Little Endian	1.2.840.10008.1.2		
Standalone Curve Storage SOP Class	1.2.840.10008.5.1.4.1.1.9	Explicit VR Little Endian	1.2.840.10008.1.2.1	SCP	None
		Implicit VR Little Endian	1.2.840.10008.1.2		
Waveform Storage Trial SOP Class	1.2.840.10008.5.1.4.1.1.9.1	Explicit VR Little Endian	1.2.840.10008.1.2.1	SCP	None
		Implicit VR Little Endian	1.2.840.10008.1.2		
Twelve Lead ECG Waveform Storage SOP Class	1.2.840.10008.5.1.4.1.1.9.1.1	Explicit VR Little Endian	1.2.840.10008.1.2.1	SCU	None
		Implicit VR Little Endian	1.2.840.10008.1.2		
General ECG Waveform Storage SOP Class	1.2.840.10008.5.1.4.1.1.9.1.2	Explicit VR Little Endian	1.2.840.10008.1.2.1	SCP	None
		Implicit VR Little Endian	1.2.840.10008.1.2		
Ambulatory ECG Waveform Storage SOP Class	1.2.840.10008.5.1.4.1.1.9.1.3	Explicit VR Little Endian	1.2.840.10008.1.2.1	SCP	None
		Implicit VR Little Endian	1.2.840.10008.1.2		
Hemodynamic Waveform Storage SOP Class	1.2.840.10008.5.1.4.1.1.9.2.1	Explicit VR Little Endian	1.2.840.10008.1.2.1	SCP	None
		Implicit VR Little Endian	1.2.840.10008.1.2		

Presentation Context Table					
Abstract Syntax		Transfer Syntax		Role	Extended Negotiation
Name	UID	Name List	UID List		
Cardiac Electrophysiology Waveform Storage SOP Class	1.2.840.10008.5.1.4.1.1.9.3.1	Explicit VR Little Endian	1.2.840.10008.1.2.1	SCP	None
		Implicit VR Little Endian	1.2.840.10008.1.2		
Basic Voice Audio Waveform Storage SOP Class	1.2.840.10008.5.1.4.1.1.9.4.1	Explicit VR Little Endian	1.2.840.10008.1.2.1	SCP	None
		Implicit VR Little Endian	1.2.840.10008.1.2		
General Audio Waveform Storage	1.2.840.10008.5.1.4.1.1.9.4.2	Explicit VR Little Endian	1.2.840.10008.1.2.1	SCP	None
		Implicit VR Little Endian	1.2.840.10008.1.2		
Arterial Pulse Waveform Storage SOP Class	1.2.840.10008.5.1.4.1.1.9.5.1	Explicit VR Little Endian	1.2.840.10008.1.2.1	SCP	None
		Implicit VR Little Endian	1.2.840.10008.1.2		
Respiratory Waveform Storage SOP Class	1.2.840.10008.5.1.4.1.1.9.6.1	Explicit VR Little Endian	1.2.840.10008.1.2.1	SCP	None
		Implicit VR Little Endian	1.2.840.10008.1.2		
Standalone Modality LUT Storage SOP Class	1.2.840.10008.5.1.4.1.1.10	Explicit VR Little Endian	1.2.840.10008.1.2.1	SCP	None
		Implicit VR Little Endian	1.2.840.10008.1.2		
Standalone VOILUT Storage SOP Class	1.2.840.10008.5.1.4.1.1.11	Explicit VR Little Endian	1.2.840.10008.1.2.1	SCP	None
		Implicit VR Little Endian	1.2.840.10008.1.2		
Grayscale Softcopy Presentation State Storage SOP Class	1.2.840.10008.5.1.4.1.1.11.1	Explicit VR Little Endian	1.2.840.10008.1.2.1	SCP	None
		Implicit VR Little Endian	1.2.840.10008.1.2		
Color Softcopy Presentation State Storage SOP Class	1.2.840.10008.5.1.4.1.1.11.2	Explicit VR Little Endian	1.2.840.10008.1.2.1	SCP	None
		Implicit VR Little Endian	1.2.840.10008.1.2		

Presentation Context Table					
Abstract Syntax		Transfer Syntax		Role	Extended Negotiation
Name	UID	Name List	UID List		
Pseudo Color Softcopy Presentation State Storage SOP Class	1.2.840.10008.5.1.4.1.1.11.3	Explicit VR Little Endian	1.2.840.10008.1.2.1	SCP	None
		Implicit VR Little Endian	1.2.840.10008.1.2		
Blending Softcopy Presentation State Storage SOP Class	1.2.840.10008.5.1.4.1.1.11.4	Explicit VR Little Endian	1.2.840.10008.1.2.1	SCP	None
		Implicit VR Little Endian	1.2.840.10008.1.2		
XA-XRF Grayscale Softcopy Presentation State Storage SOP Class	1.2.840.10008.5.1.4.1.1.11.5	Explicit VR Little Endian	1.2.840.10008.1.2.1	SCP	None
		Implicit VR Little Endian	1.2.840.10008.1.2		
Grayscale Planar MPR Volumetric Presentation State Storage SOP Class	1.2.840.10008.5.1.4.1.1.11.6	Explicit VR Little Endian	1.2.840.10008.1.2.1	SCP	None
		Implicit VR Little Endian	1.2.840.10008.1.2		
Compositing Planar MPR Volumetric Presentation State Storage SOP Class	1.2.840.10008.5.1.4.1.1.11.7	Explicit VR Little Endian	1.2.840.10008.1.2.1	SCP	None
		Implicit VR Little Endian	1.2.840.10008.1.2		
Advanced Blending Presentation State Storage SOP Class	1.2.840.10008.5.1.4.1.1.11.8	Explicit VR Little Endian	1.2.840.10008.1.2.1	SCP	None
		Implicit VR Little Endian	1.2.840.10008.1.2		
Volume Rendering Volumetric Presentation State Storage SOP Class	1.2.840.10008.5.1.4.1.1.11.9	Explicit VR Little Endian	1.2.840.10008.1.2.1	SCP	None
		Implicit VR Little Endian	1.2.840.10008.1.2		
Segmented Volume Rendering Volumetric Presentation State Storage SOP Class	1.2.840.10008.5.1.4.1.1.11.10	Explicit VR Little Endian	1.2.840.10008.1.2.1	SCP	None
		Implicit VR Little Endian	1.2.840.10008.1.2		
Multiple Volume Rendering Volumetric Presentation State Storage SOP Class	1.2.840.10008.5.1.4.1.1.11.11	Explicit VR Little Endian	1.2.840.10008.1.2.1	SCP	None
		Implicit VR Little Endian	1.2.840.10008.1.2		

Presentation Context Table					
Abstract Syntax		Transfer Syntax		Role	Extended Negotiation
Name	UID	Name List	UID List		
X-Ray Angiographic Image Storage SOP Class	1.2.840.10008.5.1.4.1.1.12.1	Explicit VR Little Endian	1.2.840.10008.1.2.1	SCP	None
		Implicit VR Little Endian	1.2.840.10008.1.2		
Enhanced XA Image Storage SOP Class	1.2.840.10008.5.1.4.1.1.12.1.1	Explicit VR Little Endian	1.2.840.10008.1.2.1	SCP	None
		Implicit VR Little Endian	1.2.840.10008.1.2		
X-Ray Radiofluoroscopic Image Storage SOP Class	1.2.840.10008.5.1.4.1.1.12.2	Explicit VR Little Endian	1.2.840.10008.1.2.1	SCP	None
		Implicit VR Little Endian	1.2.840.10008.1.2		
Enhanced XRF Image Storage SOP Class	1.2.840.10008.5.1.4.1.1.12.2.1	Explicit VR Little Endian	1.2.840.10008.1.2.1	SCP	None
		Implicit VR Little Endian	1.2.840.10008.1.2		
X-Ray Angiographic Bi Plane Image Storage SOP Class	1.2.840.10008.5.1.4.1.1.12.3	Explicit VR Little Endian	1.2.840.10008.1.2.1	SCP	None
		Implicit VR Little Endian	1.2.840.10008.1.2		
X-Ray 3D Angiographic Image Storage SOP Class	1.2.840.10008.5.1.4.1.1.13.1.1	Explicit VR Little Endian	1.2.840.10008.1.2.1	SCP	None
		Implicit VR Little Endian	1.2.840.10008.1.2		
X-Ray 3D Craniofacial Image Storage SOP Class	1.2.840.10008.5.1.4.1.1.13.1.2	Explicit VR Little Endian	1.2.840.10008.1.2.1	SCP	None
		Implicit VR Little Endian	1.2.840.10008.1.2		
Breast Tomosynthesis Image Storage SOP Class	1.2.840.10008.5.1.4.1.1.13.1.3	Explicit VR Little Endian	1.2.840.10008.1.2.1	SCP	None
		Implicit VR Little Endian	1.2.840.10008.1.2		
Breast Projection X-Ray Image Storage – For Presentation SOP Class	1.2.840.10008.5.1.4.1.1.13.1.4	Explicit VR Little Endian	1.2.840.10008.1.2.1	SCP	None
		Implicit VR Little Endian	1.2.840.10008.1.2		

Presentation Context Table					
Abstract Syntax		Transfer Syntax		Role	Extended Negotiation
Name	UID	Name List	UID List		
Breast Projection X-Ray Image Storage – For Processing SOP Class	1.2.840.10008.5.1.4.1.1.13.1.5	Explicit VR Little Endian	1.2.840.10008.1.2.1	SCP	None
		Implicit VR Little Endian	1.2.840.10008.1.2		
Intravascular Optical Coherence Tomography Image Storage – For Presentation SOP Class	1.2.840.10008.5.1.4.1.1.14.1	Explicit VR Little Endian	1.2.840.10008.1.2.1	SCP	None
		Implicit VR Little Endian	1.2.840.10008.1.2		
Intravascular Optical Coherence Tomography Image Storage – For Processing SOP Class	1.2.840.10008.5.1.4.1.1.14.2	Explicit VR Little Endian	1.2.840.10008.1.2.1	SCP	None
		Implicit VR Little Endian	1.2.840.10008.1.2		
Parametric Map Storage SOP Class	1.2.840.10008.5.1.4.1.1.30	Explicit VR Little Endian	1.2.840.10008.1.2.1	SCP	None
		Implicit VR Little Endian	1.2.840.10008.1.2		
MR Image Storage Zero Padded SOP Class (Retired)	1.2.840.10008.5.1.4.1.1.40	Explicit VR Little Endian	1.2.840.10008.1.2.1	SCP	None
		Implicit VR Little Endian	1.2.840.10008.1.2		
Raw Data Storage SOP Class	1.2.840.10008.5.1.4.1.1.66	Explicit VR Little Endian	1.2.840.10008.1.2.1	SCP	None
		Implicit VR Little Endian	1.2.840.10008.1.2		
Spatial Registration Storage SOP Class	1.2.840.10008.5.1.4.1.1.66.1	Explicit VR Little Endian	1.2.840.10008.1.2.1	SCP	None
		Implicit VR Little Endian	1.2.840.10008.1.2		
Spatial Fiducials Storage SOP Class	1.2.840.10008.5.1.4.1.1.66.2	Explicit VR Little Endian	1.2.840.10008.1.2.1	SCP	None
		Implicit VR Little Endian	1.2.840.10008.1.2		
Deformable Spatial Registration Storage SOP Class	1.2.840.10008.5.1.4.1.1.66.3	Explicit VR Little Endian	1.2.840.10008.1.2.1	SCP	None
		Implicit VR Little Endian	1.2.840.10008.1.2		

Presentation Context Table					
Abstract Syntax		Transfer Syntax		Role	Extended Negotiation
Name	UID	Name List	UID List		
Segmentation Storage SOP Class	1.2.840.10008.5.1.4.1.1.66.4	Explicit VR Little Endian	1.2.840.10008.1.2.1	SCP	None
		Implicit VR Little Endian	1.2.840.10008.1.2		
Surface Segmentation Storage SOP Class	1.2.840.10008.5.1.4.1.1.66.5	Explicit VR Little Endian	1.2.840.10008.1.2.1	SCP	None
		Implicit VR Little Endian	1.2.840.10008.1.2		
Tractography Results Storage SOP Class	1.2.840.10008.5.1.4.1.1.66.6	Explicit VR Little Endian	1.2.840.10008.1.2.1	SCP	None
		Implicit VR Little Endian	1.2.840.10008.1.2		
Real World Value Mapping Storage SOP Class	1.2.840.10008.5.1.4.1.1.67	Explicit VR Little Endian	1.2.840.10008.1.2.1	SCP	None
		Implicit VR Little Endian	1.2.840.10008.1.2		
Surface Scan Mesh Storage SOP Class	1.2.840.10008.5.1.4.1.1.68.1	Explicit VR Little Endian	1.2.840.10008.1.2.1	SCP	None
		Implicit VR Little Endian	1.2.840.10008.1.2		
Surface Scan Point Cloud Storage SOP Class	1.2.840.10008.5.1.4.1.1.68.2	Explicit VR Little Endian	1.2.840.10008.1.2.1	SCP	None
		Implicit VR Little Endian	1.2.840.10008.1.2		
VL Image Storage Trial SOP Class	1.2.840.10008.5.1.4.1.1.77.1	Explicit VR Little Endian	1.2.840.10008.1.2.1	SCP	None
		Implicit VR Little Endian	1.2.840.10008.1.2		
VL Multi Frame Image Storage Trial SOP Class	1.2.840.10008.5.1.4.1.1.77.2	Explicit VR Little Endian	1.2.840.10008.1.2.1	SCP	None
		Implicit VR Little Endian	1.2.840.10008.1.2		
VL Endoscopic Image Storage SOP Class	1.2.840.10008.5.1.4.1.1.77.1.1	Explicit VR Little Endian	1.2.840.10008.1.2.1	SCP	None
		Implicit VR Little Endian	1.2.840.10008.1.2		

Presentation Context Table					
Abstract Syntax		Transfer Syntax		Role	Extended Negotiation
Name	UID	Name List	UID List		
Video Endoscopic Image Storage SOP Class	1.2.840.10008.5.1.4.1.1.77.1.1.1	Explicit VR Little Endian	1.2.840.10008.1.2.1	SCP	None
		Implicit VR Little Endian	1.2.840.10008.1.2		
VL Microscopic Image Storage SOP Class	1.2.840.10008.5.1.4.1.1.77.1.2	Explicit VR Little Endian	1.2.840.10008.1.2.1	SCP	None
		Implicit VR Little Endian	1.2.840.10008.1.2		
Video Microscopic Image Storage SOP Class	1.2.840.10008.5.1.4.1.1.77.1.2.1	Explicit VR Little Endian	1.2.840.10008.1.2.1	SCP	None
		Implicit VR Little Endian	1.2.840.10008.1.2		
VL Slide Coordinates Microscopic Image Storage SOP Class	1.2.840.10008.5.1.4.1.1.77.1.3	Explicit VR Little Endian	1.2.840.10008.1.2.1	SCP	None
		Implicit VR Little Endian	1.2.840.10008.1.2		
VL Photographic Image Storage SOP Class	1.2.840.10008.5.1.4.1.1.77.1.4	Explicit VR Little Endian	1.2.840.10008.1.2.1	SCP	None
		Implicit VR Little Endian	1.2.840.10008.1.2		
Video Photographic Image Storage SOP Class	1.2.840.10008.5.1.4.1.1.77.1.4.1	Explicit VR Little Endian	1.2.840.10008.1.2.1	SCP	None
		Implicit VR Little Endian	1.2.840.10008.1.2		
Ophthalmic Photography 8 Bit Image Storage SOP Class	1.2.840.10008.5.1.4.1.1.77.1.5.1	Explicit VR Little Endian	1.2.840.10008.1.2.1	SCP	None
		Implicit VR Little Endian	1.2.840.10008.1.2		
Ophthalmic Photography 16 Bit Image Storage SOP Class	1.2.840.10008.5.1.4.1.1.77.1.5.2	Explicit VR Little Endian	1.2.840.10008.1.2.1	SCP	None
		Implicit VR Little Endian	1.2.840.10008.1.2		
Stereometric Relationship Storage SOP Class	1.2.840.10008.5.1.4.1.1.77.1.5.3	Explicit VR Little Endian	1.2.840.10008.1.2.1	SCP	None
		Implicit VR Little Endian	1.2.840.10008.1.2		

Presentation Context Table					
Abstract Syntax		Transfer Syntax		Role	Extended Negotiation
Name	UID	Name List	UID List		
Ophthalmic Tomography Image Storage SOP Class	1.2.840.10008.5.1.4.1.1.77.1.5.4	Explicit VR Little Endian	1.2.840.10008.1.2.1	SCP	None
		Implicit VR Little Endian	1.2.840.10008.1.2		
Wide Field Ophthalmic Photography Stereographic Projection Image Storage SOP Class	1.2.840.10008.5.1.4.1.1.77.1.5.5	Explicit VR Little Endian	1.2.840.10008.1.2.1	SCP	None
		Implicit VR Little Endian	1.2.840.10008.1.2		
Wide Field Ophthalmic Photography 3D Coordinates Image Storage SOP Class	1.2.840.10008.5.1.4.1.1.77.1.5.6	Explicit VR Little Endian	1.2.840.10008.1.2.1	SCP	None
		Implicit VR Little Endian	1.2.840.10008.1.2		
Ophthalmic Optical Coherence Tomography En Face Image Storage SOP Class	1.2.840.10008.5.1.4.1.1.77.1.5.7	Explicit VR Little Endian	1.2.840.10008.1.2.1	SCP	None
		Implicit VR Little Endian	1.2.840.10008.1.2		
Ophthalmic Optical Coherence Tomography B-scan Volume Analysis Storage SOP Class	1.2.840.10008.5.1.4.1.1.77.1.5.8	Explicit VR Little Endian	1.2.840.10008.1.2.1	SCP	None
		Implicit VR Little Endian	1.2.840.10008.1.2		
VL Whole Slide Microscopy Image Storage SOP Class	1.2.840.10008.5.1.4.1.1.77.1.6	Explicit VR Little Endian	1.2.840.10008.1.2.1	SCP	None
		Implicit VR Little Endian	1.2.840.10008.1.2		
Lensometry Measurements Storage SOP Class	1.2.840.10008.5.1.4.1.1.78.1	Explicit VR Little Endian	1.2.840.10008.1.2.1	SCP	None
		Implicit VR Little Endian	1.2.840.10008.1.2		
Autorefraction Measurements Storage SOP Class	1.2.840.10008.5.1.4.1.1.78.2	Explicit VR Little Endian	1.2.840.10008.1.2.1	SCP	None
		Implicit VR Little Endian	1.2.840.10008.1.2		
Keratometry Measurements Storage SOP Class	1.2.840.10008.5.1.4.1.1.78.3	Explicit VR Little Endian	1.2.840.10008.1.2.1	SCP	None
		Implicit VR Little Endian	1.2.840.10008.1.2		

Presentation Context Table					
Abstract Syntax		Transfer Syntax		Role	Extended Negotiation
Name	UID	Name List	UID List		
Subjective Refraction Measurements Storage SOP Class	1.2.840.10008.5.1.4.1.1.78.4	Explicit VR Little Endian	1.2.840.10008.1.2.1	SCP	None
		Implicit VR Little Endian	1.2.840.10008.1.2		
Visual Acuity Measurements Storage SOP Class	1.2.840.10008.5.1.4.1.1.78.5	Explicit VR Little Endian	1.2.840.10008.1.2.1	SCP	None
		Implicit VR Little Endian	1.2.840.10008.1.2		
Spectacle Prescription Report Storage SOP Class	1.2.840.10008.5.1.4.1.1.78.6	Explicit VR Little Endian	1.2.840.10008.1.2.1	SCP	None
		Implicit VR Little Endian	1.2.840.10008.1.2		
Ophthalmic Axial Measurements Storage SOP Class	1.2.840.10008.5.1.4.1.1.78.7	Explicit VR Little Endian	1.2.840.10008.1.2.1	SCP	None
		Implicit VR Little Endian	1.2.840.10008.1.2		
Intraocular Lens Calculations Storage SOP Class	1.2.840.10008.5.1.4.1.1.78.8	Explicit VR Little Endian	1.2.840.10008.1.2.1	SCP	None
		Implicit VR Little Endian	1.2.840.10008.1.2		
Macular Grid Thickness and Volume Report Storage SOP Class	1.2.840.10008.5.1.4.1.1.79.1	Explicit VR Little Endian	1.2.840.10008.1.2.1	SCP	None
		Implicit VR Little Endian	1.2.840.10008.1.2		
Ophthalmic Visual Field Static Perimetry Measurements Storage SOP Class	1.2.840.10008.5.1.4.1.1.80.1	Explicit VR Little Endian	1.2.840.10008.1.2.1	SCP	None
		Implicit VR Little Endian	1.2.840.10008.1.2		
Ophthalmic Thickness Map Storage SOP Class	1.2.840.10008.5.1.4.1.1.81.1	Explicit VR Little Endian	1.2.840.10008.1.2.1	SCP	None
		Implicit VR Little Endian	1.2.840.10008.1.2		
Corneal Topography Map Storage SOP Class	1.2.840.10008.5.1.4.1.1.82.1	Explicit VR Little Endian	1.2.840.10008.1.2.1	SCP	None
		Implicit VR Little Endian	1.2.840.10008.1.2		

Presentation Context Table					
Abstract Syntax		Transfer Syntax		Role	Extended Negotiation
Name	UID	Name List	UID List		
Text SR Storage Trial SOP Class	1.2.840.10008.5.1.4.1.1.88.1	Explicit VR Little Endian	1.2.840.10008.1.2.1	SCP	None
		Implicit VR Little Endian	1.2.840.10008.1.2		
Audio SR Storage Trial SOP Class	1.2.840.10008.5.1.4.1.1.88.2	Explicit VR Little Endian	1.2.840.10008.1.2.1	SCP	None
		Implicit VR Little Endian	1.2.840.10008.1.2		
Detail SR Storage Trial SOP Class	1.2.840.10008.5.1.4.1.1.88.3	Explicit VR Little Endian	1.2.840.10008.1.2.1	SCP	None
		Implicit VR Little Endian	1.2.840.10008.1.2		
Comprehensive SR Storage Trial SOP Class	1.2.840.10008.5.1.4.1.1.88.4	Explicit VR Little Endian	1.2.840.10008.1.2.1	SCP	None
		Implicit VR Little Endian	1.2.840.10008.1.2		
Basic Text SR Storage SOP Class	1.2.840.10008.5.1.4.1.1.88.11	Explicit VR Little Endian	1.2.840.10008.1.2.1	SCP	None
		Implicit VR Little Endian	1.2.840.10008.1.2		
Enhanced SR Storage SOP Class	1.2.840.10008.5.1.4.1.1.88.22	Explicit VR Little Endian	1.2.840.10008.1.2.1	SCP	None
		Implicit VR Little Endian	1.2.840.10008.1.2		
Comprehensive SR Storage SOP Class	1.2.840.10008.5.1.4.1.1.88.33	Explicit VR Little Endian	1.2.840.10008.1.2.1	SCP	None
		Implicit VR Little Endian	1.2.840.10008.1.2		
Comprehensive 3D SR Storage SOP Class	1.2.840.10008.5.1.4.1.1.88.34	Explicit VR Little Endian	1.2.840.10008.1.2.1	SCP	None
		Implicit VR Little Endian	1.2.840.10008.1.2		
Extensible SR Storage SOP Class	1.2.840.10008.5.1.4.1.1.88.35	Explicit VR Little Endian	1.2.840.10008.1.2.1	SCP	None
		Implicit VR Little Endian	1.2.840.10008.1.2		

Presentation Context Table					
Abstract Syntax		Transfer Syntax		Role	Extended Negotiation
Name	UID	Name List	UID List		
Procedure Log Storage SOP Class	1.2.840.10008.5.1.4.1.1.88.40	Explicit VR Little Endian	1.2.840.10008.1.2.1	SCP	None
		Implicit VR Little Endian	1.2.840.10008.1.2		
Mammography CAD SR Storage SOP Class	1.2.840.10008.5.1.4.1.1.88.50	Explicit VR Little Endian	1.2.840.10008.1.2.1	SCP	None
		Implicit VR Little Endian	1.2.840.10008.1.2		
Key Object Selection Document Storage SOP Class	1.2.840.10008.5.1.4.1.1.88.59	Explicit VR Little Endian	1.2.840.10008.1.2.1	SCP	None
		Implicit VR Little Endian	1.2.840.10008.1.2		
Chest CAD SR Storage SOP Class	1.2.840.10008.5.1.4.1.1.88.65	Explicit VR Little Endian	1.2.840.10008.1.2.1	SCP	None
		Implicit VR Little Endian	1.2.840.10008.1.2		
X-Ray Radiation Dose SR Storage SOP Class	1.2.840.10008.5.1.4.1.1.88.67	Explicit VR Little Endian	1.2.840.10008.1.2.1	SCP	None
		Implicit VR Little Endian	1.2.840.10008.1.2		
Radiopharmaceutical Radiation Dose SR Storage SOP Class	1.2.840.10008.5.1.4.1.1.88.68	Explicit VR Little Endian	1.2.840.10008.1.2.1	SCP	None
		Implicit VR Little Endian	1.2.840.10008.1.2		
Colon CAD SR Storage SOP Class	1.2.840.10008.5.1.4.1.1.88.69	Explicit VR Little Endian	1.2.840.10008.1.2.1	SCP	None
		Implicit VR Little Endian	1.2.840.10008.1.2		
Implantation Plan SR Storage SOP Class	1.2.840.10008.5.1.4.1.1.88.70	Explicit VR Little Endian	1.2.840.10008.1.2.1	SCP	None
		Implicit VR Little Endian	1.2.840.10008.1.2		
Acquisition Context SR Storage SOP Class	1.2.840.10008.5.1.4.1.1.88.71	Explicit VR Little Endian	1.2.840.10008.1.2.1	SCP	None
		Implicit VR Little Endian	1.2.840.10008.1.2		

Presentation Context Table					
Abstract Syntax		Transfer Syntax		Role	Extended Negotiation
Name	UID	Name List	UID List		
Simplified Adult Echo SR Storage SOP Class	1.2.840.10008.5.1.4.1.1.88.72	Explicit VR Little Endian	1.2.840.10008.1.2.1	SCP	None
		Implicit VR Little Endian	1.2.840.10008.1.2		
Patient Radiation Dose SR Storage SOP Class	1.2.840.10008.5.1.4.1.1.88.73	Explicit VR Little Endian	1.2.840.10008.1.2.1	SCP	None
		Implicit VR Little Endian	1.2.840.10008.1.2		
Content Assessment Results Storage SOP Class	1.2.840.10008.5.1.4.1.1.90.1	Explicit VR Little Endian	1.2.840.10008.1.2.1	SCP	None
		Implicit VR Little Endian	1.2.840.10008.1.2		
Encapsulated PDF Storage SOP Class	1.2.840.10008.5.1.4.1.1.104.1	Explicit VR Little Endian	1.2.840.10008.1.2.1	SCP	None
		Implicit VR Little Endian	1.2.840.10008.1.2		
Encapsulated CDA Storage SOP Class	1.2.840.10008.5.1.4.1.1.104.2	Explicit VR Little Endian	1.2.840.10008.1.2.1	SCP	None
		Implicit VR Little Endian	1.2.840.10008.1.2		
Encapsulated STL Storage SOP Class	1.2.840.10008.5.1.4.1.1.104.3	Explicit VR Little Endian	1.2.840.10008.1.2.1	SCP	None
		Implicit VR Little Endian	1.2.840.10008.1.2		
Positron Emission Tomography Image Storage SOP Class	1.2.840.10008.5.1.4.1.1.128	Explicit VR Little Endian	1.2.840.10008.1.2.1	SCP	None
		Implicit VR Little Endian	1.2.840.10008.1.2		
Legacy Converted Enhanced PET Image Storage SOP Class	1.2.840.10008.5.1.4.1.1.128.1	Explicit VR Little Endian	1.2.840.10008.1.2.1	SCP	None
		Implicit VR Little Endian	1.2.840.10008.1.2		
Standalone PET Curve Storage SOP Class	1.2.840.10008.5.1.4.1.1.129	Explicit VR Little Endian	1.2.840.10008.1.2.1	SCP	None
		Implicit VR Little Endian	1.2.840.10008.1.2		

Presentation Context Table					
Abstract Syntax		Transfer Syntax		Role	Extended Negotiation
Name	UID	Name List	UID List		
Enhanced PET Image Storage SOP Class	1.2.840.10008.5.1.4.1.1.130	Explicit VR Little Endian	1.2.840.10008.1.2.1	SCP	None
		Implicit VR Little Endian	1.2.840.10008.1.2		
Basic Structured Display Storage SOP Class	1.2.840.10008.5.1.4.1.1.131	Explicit VR Little Endian	1.2.840.10008.1.2.1	SCP	None
		Implicit VR Little Endian	1.2.840.10008.1.2		
CT Defined Procedure Protocol Storage SOP Class	1.2.840.10008.5.1.4.1.1.200.1	Explicit VR Little Endian	1.2.840.10008.1.2.1	SCP	None
		Implicit VR Little Endian	1.2.840.10008.1.2		
CT Performed Procedure Protocol Storage SOP Class	1.2.840.10008.5.1.4.1.1.200.2	Explicit VR Little Endian	1.2.840.10008.1.2.1	SCP	None
		Implicit VR Little Endian	1.2.840.10008.1.2		
Protocol Approval Storage SOP Class	1.2.840.10008.5.1.4.1.1.200.3	Explicit VR Little Endian	1.2.840.10008.1.2.1	SCP	None
		Implicit VR Little Endian	1.2.840.10008.1.2		
RT Image Storage SOP Class	1.2.840.10008.5.1.4.1.1.481.1	Explicit VR Little Endian	1.2.840.10008.1.2.1	SCP	None
		Implicit VR Little Endian	1.2.840.10008.1.2		
RT Dose Storage SOP Class	1.2.840.10008.5.1.4.1.1.481.2	Explicit VR Little Endian	1.2.840.10008.1.2.1	SCP	None
		Implicit VR Little Endian	1.2.840.10008.1.2		
RT Structure Set Storage SOP Class	1.2.840.10008.5.1.4.1.1.481.3	Explicit VR Little Endian	1.2.840.10008.1.2.1	SCP	None
		Implicit VR Little Endian	1.2.840.10008.1.2		
RT Beams Treatment Record Storage SOP Class	1.2.840.10008.5.1.4.1.1.481.4	Explicit VR Little Endian	1.2.840.10008.1.2.1	SCP	None
		Implicit VR Little Endian	1.2.840.10008.1.2		

Presentation Context Table					
Abstract Syntax		Transfer Syntax		Role	Extended Negotiation
Name	UID	Name List	UID List		
RT Plan Storage SOP Class	1.2.840.10008.5.1.4.1.1.481.5	Explicit VR Little Endian	1.2.840.10008.1.2.1	SCP	None
		Implicit VR Little Endian	1.2.840.10008.1.2		
RT Brachy Treatment Record Storage SOP Class	1.2.840.10008.5.1.4.1.1.481.6	Explicit VR Little Endian	1.2.840.10008.1.2.1	SCP	None
		Implicit VR Little Endian	1.2.840.10008.1.2		
RT Treatment Summary Record Storage SOP Class	1.2.840.10008.5.1.4.1.1.481.7	Explicit VR Little Endian	1.2.840.10008.1.2.1	SCP	None
		Implicit VR Little Endian	1.2.840.10008.1.2		
RT Ion Plan Storage SOP Class	1.2.840.10008.5.1.4.1.1.481.8	Explicit VR Little Endian	1.2.840.10008.1.2.1	SCP	None
		Implicit VR Little Endian	1.2.840.10008.1.2		
RT Ion Beams Treatment Record Storage SOP Class	1.2.840.10008.5.1.4.1.1.481.9	Explicit VR Little Endian	1.2.840.10008.1.2.1	SCP	None
		Implicit VR Little Endian	1.2.840.10008.1.2		
RT Beams Delivery Instruction Storage Trial SOP Class	1.2.840.10008.5.1.4.34.1	Explicit VR Little Endian	1.2.840.10008.1.2.1	SCP	None
		Implicit VR Little Endian	1.2.840.10008.1.2		
RT Beams Delivery Instruction Storage SOP Class	1.2.840.10008.5.1.4.34.7	Explicit VR Little Endian	1.2.840.10008.1.2.1	SCP	None
		Implicit VR Little Endian	1.2.840.10008.1.2		
RT Brachy Application Setup Delivery Instruction Storage SOP Class	1.2.840.10008.5.1.4.34.10	Explicit VR Little Endian	1.2.840.10008.1.2.1	SCP	None
		Implicit VR Little Endian	1.2.840.10008.1.2		
Hanging Protocol Storage SOP Class	1.2.840.10008.5.1.4.38.1	Explicit VR Little Endian	1.2.840.10008.1.2.1	SCP	None
		Implicit VR Little Endian	1.2.840.10008.1.2		

Presentation Context Table					
Abstract Syntax		Transfer Syntax		Role	Extended Negotiation
Name	UID	Name List	UID List		
Color Palette Storage SOP Class	1.2.840.10008.5.1.4.39.1	Explicit VR Little Endian	1.2.840.10008.1.2.1	SCP	None
		Implicit VR Little Endian	1.2.840.10008.1.2		
Generic Implant Template Storage SOP Class	1.2.840.10008.5.1.4.43.1	Explicit VR Little Endian	1.2.840.10008.1.2.1	SCP	None
		Implicit VR Little Endian	1.2.840.10008.1.2		
Implant Assembly Template Storage SOP Class	1.2.840.10008.5.1.4.44.1	Explicit VR Little Endian	1.2.840.10008.1.2.1	SCP	None
		Implicit VR Little Endian	1.2.840.10008.1.2		
Implant Template Group Storage SOP Class	1.2.840.10008.5.1.4.45.1	Explicit VR Little Endian	1.2.840.10008.1.2.1	SCP	None
		Implicit VR Little Endian	1.2.840.10008.1.2		
Stored Print Storage SOP Class (Retired)	1.2.840.10008.5.1.1.27	Explicit VR Little Endian	1.2.840.10008.1.2.1	SCP	None
		Implicit VR Little Endian	1.2.840.10008.1.2		

4.2.4.4.1.3. SOP Specific Conformance for Storage SOP Classes

This section and sub-section include the manufacturer SOP and Dataset specific information as well the status codes and their corresponding behavior.

4.2.4.4.1.3.1. Dataset Specific Conformance for C-STORE-RSP

Detail regarding the Dataset Specific response behavior will be reported in this section.
This includes the dataset specific behavior, i.e. error codes, error and exception handling, time-outs, etc.

Table 76: Status Response

Service Status	Error Code	Further Meaning	Behavior
Success	0000	Successful stored	Log; Release association.
Failure	A7xx	Refused: Out of Resources	Log; Release association.
	A9xx	Error: Data Set does not match SOP Class	Log; Release association.
	Cxxx	Error: cannot understand	Log; Release association.
Warning	B000	Coercion of Data Elements	Log; Release association.

Service Status	Error Code	Further Meaning	Behavior
	B007	Data Set does not match SOP Class	Log; Release association.
	B006	Elements Discarded	Log; Release association.

IBE receives the data through C-STORE and store it in the specified directory. No validation is performed by the IBE on the imported data.

4.2.5. IAN AE

Details of this specific Application Entity is specified in this section.

4.2.5.1. SOP Classes

IAN AE, for its functioning, makes use of following DICOM functions:
- Instance Availability Notification as SCP, which uses N-CREATE as service element.

These DICOM functions will be described in the following subsections.

This Application Entity provides Standard Conformance to the following SOP Classes.

Table 77: SOP Classes for IAN AE

SOP Class Name	SOP Class UID	SCU	SCP
Instance Availability Notification SOP	1.2.840.10008.5.1.4.33	No	Yes

Note: Any SOP specific behavior is documented later in the conformance statement in the applicable SOP specific conformance section.

4.2.5.2. Association Policies

Each AE specification contains a description of the general association establishment and acceptance policies of the AE.

4.2.5.2.1. General

The DICOM standard application context is specified below.

Table 78: DICOM Application Context

Description	Value
Application Context Name	1.2.840.10008.3.1.1.1

4.2.5.2.2. Number of Associations

The number of simultaneous associations that an Application Entity may support as an Acceptor is specified here.

For IntelliBridge Enterprise the maximum number of associations limited by the availability of the system resources. The license number of the external DICOM nodes is one of these limits.

Table 79: Number of associations as an Association Acceptor for this AE

Description	Value
Maximum number of simultaneous associations	5

4.2.5.2.3. Implementation Identifying Information

The value supplied for Implementation Class UID and version name are documented here.

Table 80: DICOM Implementation Class and Version for Instance Availability Notification AE

Implementation Class UID	1.2.40.0.13.1.3
Implementation Version Name	dcm4che-5.30.0

4.2.5.2.4. Communication Failure Handling

The behavior of the AE during communication failure is summarized in the next table.

Table 81: Communication Failure Behavior

Exception	Behavior
ARTIM Timeout	By default, DCM4CHE does not have a default timeout value. The association is closed and the status is logged.

4.2.5.3. Association Acceptance Policy

4.2.5.3.1. (Real-World) Activity – Instance Availability Notification as SCP

4.2.5.3.1.1. Description and Sequencing of Activities

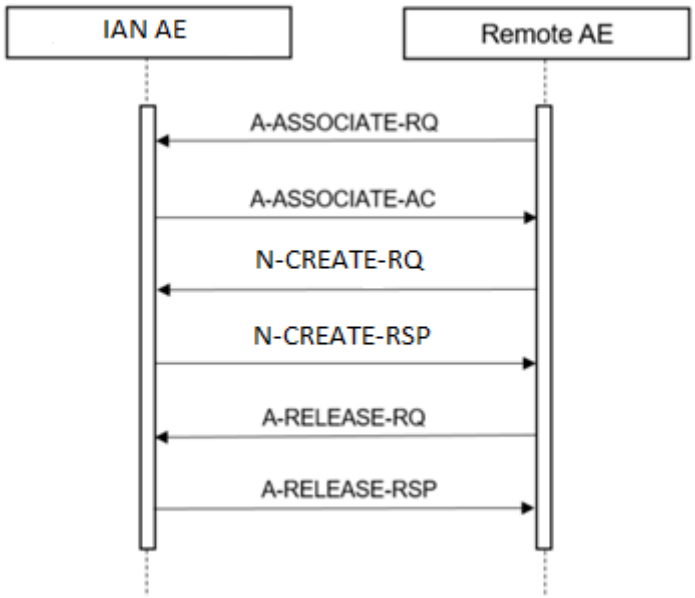

Figure 13: (Real World) Activity – Instance Availabilty Notification as SCP

For each IAN request the IAN AE accepts an association from the selected peer entity and uses it to receive N-CREATE requests and send subsequent responses. On request of the RDN SCU the association is released.

4.2.5.3.1.1.1. Accepted Presentation Contexts

The presentation contexts are defined in the table below

Table 82: Acceptable Presentation Contexts for (Real-World) Activity – Instance Availability Notification as SCP

Presentation Context Table					
Abstract Syntax		Transfer Syntax		Role	Extended Negotiation
Name	UID	Name List	UID List		
Instance Availability Notification SOP	1.2.840.10008.5.1.4.33	Explicit VR Little Endian	1.2.840.10008.1.2.1	SCP	None
		Implicit VR Little Endian	1.2.840.10008.1.2		

4.2.5.3.1.1.2. SOP Specific Conformance for Instance Availability Notification SOP Class

This section and sub-section include the manufacturer SOP and Dataset specific information as well the status codes and their corresponding behavior.

4.2.5.3.1.1.2.1. Dataset Specific Conformance for Instance Availability Notification N-CREATE-RSP

Details regarding the Dataset Specific response behavior will be reported in this section.

This part of the section includes the dataset specific behavior, i.e. error codes, error and exception handling, time-outs, etc.

Table 83: Instance Availability Notification Module

Attribute Name	Tag	VR	Value	Presence of Value	Source	Comment
Referenced Performed Procedure Step Sequence	0008,1111	SQ		ALWAYS	AUTO	Sequence value is always empty
Study Instance UID	0020,000D	UI		ALWAYS	COPY	Copied from imported object
Referenced Series Sequence	0008,1115	SQ		ALWAYS	COPY	Copied from imported object
>Series Instance UID	0020,000E	UI		ALWAYS	COPY	Copied from imported object

Attribute Name	Tag	VR	Value	Presence of Value	Source	Comment
>Referenced SOP Sequence	0008,1199	SQ		ALWAYS	COPY	Copied from imported object
>>Instance Availability	0008,0056	CS	ONLINE	ALWAYS	FIXED	
>>Retrieve AE Title	0008,0054	AE		ALWAYS	COPY	Copied from imported object
>> Referenced SOP Class UID	0008,1150	UI		ALWAYS	COPY	Copied from imported object
>> Referenced SOP Instance UID	0008,1155	UI		ALWAYS	COPY	Copied from imported object

Table 84: Status Response

Service Status	Error Code	Further Meaning	Behavior
Success	0000	Operation complete.	The request for Instance Availability Notification is considered successfully stored.

4.3. Network Interfaces

4.3.1. Physical Network Interfaces

The System provides only DICOM V3.0 TCP/IP Network Communication Support as defined in PS 3.8 of the standard.
TCP/IP is the only protocol stack supported.
Supported physical medium include:
IEEE 802.3-1995, 10BASE-T
IEEE 802.3-1995, 100BASE-TX (Fast Ethernet)
IEEE 802.3, 1000BASE-X (Fiber Optic Gigabit Ethernet).

The TCP/IP Stack as supported by the underlying Operating System.
The API is the WinSock 2 interface as supported by the underlying Operating System.

4.3.2. Additional Protocols

IntelliBridge Enterprise operates according to DICOM protocols, in the application layer of standardized communications networks. From this perspective the system supports a number of protocol stacks and physical network media. The system supports DICOM protocols on top of the TCP/IP version 4.

A Point-to-Point Protocol (PPP) Connection over dial-up line in the same network is possible.

4.4. Configuration

Any implementation's DICOM conformance may be dependent upon configuration, which takes place at the time of installation. Issues concerning configuration are addressed in this section.

4.4.1. AE Title/Presentation Address Mapping

An important installation issue is the translation from AE title to presentation address. How this is to be performed is described here.

In IntelliBridge Enterprise the local Network, the IP Address and the TCP listen port associated with these AE are configurable. The different AE's in IntelliBridge Enterprise can be configured to use the same AE title.

IntelliBridge Enterprise only accepts associations of AE Titles that are configured in IntelliBridge Enterprise.

Due to variety of network configurations that exist worldwide, no performance guaranties can be given with respect to the time it takes to complete the execution of a job.

4.4.1.1. Local AE Titles

The local AE title mapping and configuration are specified as:

Table 85: AE Title configuration table

Application Entity	Default AE Title	Default TCP/IP Port
Query/Retrieve as SCU AE	QRSCU	1112
MWL AE	SCP1	5111
MPPS AE	SCP1	5111
IAN	SCP1	5111

4.4.1.2. Remote AE Title/Presentation Address Mapping

The configuration of the remote application is specified here.

Table 86: Remote AE Title Configuration Table

AE Configuration	Description	Values
Query/Retrieve as SCP AE	Q/R SCU AE Title	-
	Store SCP AE Title	-
	Q/R SCP AE Title	-
	Hostname	-
	IP-Address	-
	Port number	-
MWL AE	Type	MWL
	AE Title	SCP1
	IP Address	Localhost
	Port	5111
	Message Types	MWL

AE Configuration	Description	Values
	Called AE Title Required	Yes
	Calling AE Title Required	Yes
MPPS AE	Type	MPPS
	AE Title	SCP1
	IP Address	Localhost
	Port	5111
	Message Types	MPPS
	Called AE Title Required	Yes
	Calling AE Title Required	Yes
	Calling AE Titles	Any
	Relay AE Title	Any (Configurable)
	Relay IP Address	Any (Configurable)
	Relay Port	Any (Configurable)

An important installation issue is the translation from AE title to presentation address. How this is to be performed is described here.

4.4.2. Parameters

The specification of important operational parameters, their default value and range (if configurable) are specified here.

Table 87: Configuration Parameters Table

Parameter	Configurable	Default Value
General Parameters		
Max PDU Receive Size	No	16378
Max PDU Send Size	No	65535
Time-out for completion of a TCP/IP connect request (Low-level timeout).	No	5s
Time-out awaiting a Response to a DIMSE Request (Low-level timeout).	No	5s
Supported Transfer Syntaxes (separately configurable for each remote AE)	No	MWL, MPPS, C FIND, C MOVE : - ImplicitVRLittleEndian, - ExplicitVRLittleEndian, - ExplicitVRBigEndianRetired C ECHO : - ImplicitVRLittleEndian
Query/Retrieve Parameters (SCU and SCP)		
Maximum Number of simultaneous Associations (SCU)	No	4
Q/R SCU DICOM Timeout (SCU)	No	3 seconds

Parameter	Configurable	Default Value
Q/R SCU Retrieve Timeout (SCU)	No	5s

5. Media Interchange

Not applicable.

6. Support of Character Sets

Any support for character sets in Network and Media services is described here.

Table 88: Supported DICOM Character Sets

Character Set Description	Defined Term	ESC Sequence	ISO Registration Number	Code Element	Character Set
Latin alphabet No. 1	ISO 2022 IR 100	ESC 02/08 04/02	ISO-IR 6	G0	ISO 646
		ESC 02/13 04/01	ISO-IR 100	G1	Supplementary set of ISO 8859
Latin alphabet No. 2	ISO 2022 IR 101	ESC 02/08 04/02	ISO-IR 6	G0	ISO 646
		ESC 02/13 04/02	ISO-IR 101	G1	Supplementary set of ISO 8859
Latin alphabet No. 3	ISO 2022 IR 109	ESC 02/08 04/02	ISO-IR 6	G0	ISO 646
		ESC 02/13 04/03	ISO-IR 109	G1	Supplementary set of ISO 8859
Latin alphabet No. 4	ISO 2022 IR 110	ESC 02/08 04/02	ISO-IR 6	G0	ISO 646
		ESC 02/13 04/04	ISO-IR 110	G1	Supplementary set of ISO 8859

7. Security

7.1. Security Profiles

If configured IntelliBridge Enterprise System supports the following security measures:

- Secure transport using TLS

7.1.1. Security use Profiles

Not supported.

7.1.2. Security Transport Connection Profiles

The following Security Transport Connection Profiles are claimed by the IntelliBridge Enterprise System:

1. Basic TLS Secure Transport Connection profile
2. AES TLS Secure Transport Connection profile

Secure communication is a “mode of operation” of the IntelliBridge Enterprise System supported by the implementation of the DICOM TLS 1.1 and TLS 1.2 Secure Transport Connection Profile. This functionality will be used by the nodes that can authenticate each other before they exchange DICOM information. For secure communication the TLS protocol v1.1. and v1.2 is used which provides message authentication, integrity, confidentiality, and replay protection. Confidentiality is optional and can be controlled by the encryption settings.
The IntelliBridge Enterprise System may communicate using the following Cipher Suites:

1. TLS_RSA_WITH_AES_256_CBC_SHA
2. TLS_RSA_WITH_AES_128_CBC_SHA

The IntelliBridge Enterprise System supports X.509 certificates. The following TLS Certification checks will be done (TLS Handshake). The machine (either server or client) that will send its certificate will:

1. Choose the certificate according to Common Name (CN) value in the Subject-field. This name is case-sensitive. All present certificates should have unique CN names.
2. The server verifies
   - that the client certificate is a X.509 certificate which is not tampered with
   - that the client certificate is in the list of trusted certificates
   - that the client certificate is not expired (present time is between "Valid From" and "Valid To" fields of the X.509 certificate)
   - that the client certificate has the correct purpose (at least the Client Authentication purpose)

3. The client verifies
   - that the server certificate is a X.509 certificate which is not tampered with
   - that the server certificate is in the list of trusted certificates
   - that the server certificate is not expired (present time is between "Valid From" and "Valid To" fields of the X.509 certificate)
   - that the server certificate has the correct purpose (at least Server Authentication purpose)

No verification is done on:

- revocation of certificates
- limiting the connection to a limited set of IP-addresses.

Node authentication with or without encryption is only possible when both nodes have:

- an access to their own private keys
- an access to a copy of the certificate of the other node containing its public key

The IntelliBridge Enterprise System can only read certificates from the certificate stores of the HKEY_LOCAL_MACHINE registry key. It is the responsibility of the Hospital to setup and maintain the certificate stores. This includes the removal of revoked certificates and certificate updates prior to their expiration. Since neither X.500 directories, Lightweight Directory Access Protocol (LDAP) nor Certificate Revocation Lists (CRLs) are supported, the whole certificate chain needs to be replaced after a security breach.
Figure 14 presents the message flow of TLS handshake supported by the IntelliBridge Enterprise System.

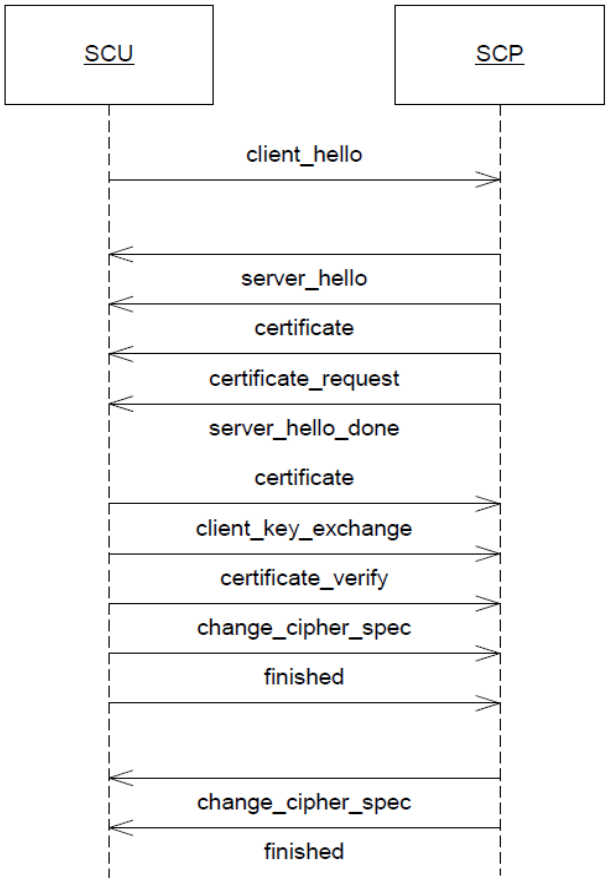

Figure 14: Message flow of TLS handshake

7.1.3. Digital Signature Profiles

Not supported.

7.1.4. Media Storage Security Profiles

Not supported.

7.1.5. Attribute Confidentiality Profiles

Not supported.

7.1.6. Network Address Management Profiles

Not supported.

7.1.7. Time Synchronization Profiles

Not supported.

7.1.8. Application Configuration Management Profiles

Not supported.

7.1.9. Audit Trail Profiles

Not supported.

7.2. Association Level Security

Not supported.

7.3. Application Level Security

Not supported.

8. Annexes for "PDF_REPORT" creation

8.1. IOD Contents

8.1.1. Created SOP Instance

This section specifies each IOD created by this application.

This section specifies each IOD created (including private IOD's). It should specify the attribute name, tag, VR, and value. The value should specify the range and source (e.g. user input, Modality Worklist, automatically generated, etc.). For content items in templates, the range and source of the concept name and concept values should be specified. Whether the value is always present or not shall be specified.

Abbreviations used in the IOD tables for the column "Presence of Module" are:

ALWAYS	The module is always present
CONDITIONAL	The module is used under specified condition

Abbreviations used in the Module table for the column "Presence of Value" are:

ALWAYS	The attribute is always present with a value
EMPTY	The attribute is always present without any value (attribute sent zero length)
VNAP	The attribute is always present and its Value is Not Always Present (attribute sent zero length if no value is present)
ANAP	The attribute is present under specified condition – if present then it will always have a value

The abbreviations used in the Module table for the column "Source" are:

AUTO	The attribute value is generated automatically
CONFIG	The attribute value source is a configurable parameter
COPY	The attribute value source is another SOP instance
FIXED	The attribute value is hard-coded in the application
IMPLICIT	The attribute value source is a user-implicit setting
MPPS	The attribute value is the same as that use for Modality Performed Procedure Step
MWL	The attribute value source is a Modality Worklist
USER	The attribute value source is explicit user input

8.1.1.1. List of created SOP Classes

Table 89: List of created SOP Classes

SOP Class Name	SOP Class UID
Encapsulated PDF Storage SOP Class	1.2.840.10008.5.1.4.1.1.104.1

8.1.1.2. Encapsulated PDF Storage SOP Class

Table 90: IOD of Created Encapsulated PDF Storage SOP Class Instances

Information Entity	Module	Presence of Module
Patient	Patient	ALWAYS
Study	General Study	ALWAYS
	Patient Study	CONDITIONAL
Series	Encapsulated Document Series	ALWAYS
Equipment	General Equipment	ALWAYS
	SC Equipment	ALWAYS
Encapsulated Document	Encapsulated Document	ALWAYS
	SOP Common	ALWAYS

Table 91: Patient Module

Attribute Name	Tag	VR	Value	Presence of Value	Source	Comment
Patient's Name	0010,0010	PN		VNAP	COPY	-
Patient ID	0010,0020	LO		VNAP	COPY	-
Issuer of Patient ID	0010,0021	LO		ANAP	AUTO	-
Patient's Birth Date	0010,0030	DA		VNAP	COPY	-
Patient's Birth Time	0010,0032	TM		ANAP	COPY	-
Patient’s Sex	0010,0040	CS	F, M, O	VNAP	COPY	-
Other Patient Names	0010,1001	PN		VNAP	COPY	-
Ethnic Group	0010,2160	SH		ANAP	COPY	-
Patient Comments	0010,4000	LT		ANAP	COPY	-

Table 92: General Study Module

Attribute Name	Tag	VR	Value	Presence of Value	Source	Comment
Study Date	0008,0020	DA		VNAP	COPY	-
Study Time	0008,0030	TM		VNAP	AUTO	-
Accession Number	0008,0050	SH		VNAP	COPY	-
Referring Physician's Name	0008,0090	PN		VNAP	COPY	-
Study Instance UID	0020,000D	UI		ALWAYS	COPY	-
Study ID	0020,0010	SH		VNAP	COPY	-

Table 93: Patient Study Module

	Tag	VR	Value	Presence of Value	Source	Comment
Admitting Diagnoses Description	0008,1080	LO		ANAP	COPY	-

Table 94: Encapsulated Document Series Module

	Tag	VR	Value	Presence of Value	Source	Comment
Modality	0008,0060	CS	XA	ALWAYS	FIXED	
Series Instance UID	0020,000E	UI		ALWAYS	AUTO	
Series Number	0020,0011	IS		ALWAYS	AUTO	-

Table 95: General Equipment Module

Attribute Name	Tag	VR	Value	Presence of Value	Source	Comment
Manufacturer	0008,0070	LO	Philips Medical Systems	VNAP	FIXED	-

Table 96: SC Equipment Module

Attribute Name	Tag	VR	Value	Presence of Value	Source	Comment
Modality	0008,0060	CS	XA	ALWAYS	FIXED	-
Conversion Type	0008,0064	CS	WSD	ALWAYS	FIXED	-

Table 97: Encapsulated Document Module

Attribute Name	Tag	VR	Value	Presence of Value	Source	Comment
Content Date	0008,0023	DA		VNAP	COPY	-
Acquisition Datetime	0008,002A	DT		VNAP	COPY	-
Content Time	0008,0033	TM		VNAP	COPY	-
Instance Number	0020,0013	IS		ALWAYS	COPY	-
Burned in Annotation	0028,0301	CS	YES	ALWAYS	FIXED	-
Concept Name Code Sequence	0040,A043	SQ		VNAP	AUTO	-
Verification Flag	0040,A493	CS		ANAP	COPY	-
Document Title	0042,0010	ST		VNAP	AUTO	-
Encapsulated Document	0042,0011	OB		ALWAYS	AUTO	-
MIME Type of Encapsulated Document	0042,0012	LO	application/pdf	ALWAYS	FIXED	-

Table 98: SOP Common Module

Attribute Name	Tag	VR	Value	Presence of Value	Source	Comment
Specific Character Set	0008,0005	CS		ANAP	CONFIG	-
SOP Class UID	0008,0016	UI	1.2.840.10008.5.1.4.1.1.104.1	ALWAYS	FIXED	-
SOP Instance UID	0008,0018	UI		ALWAYS	AUTO	-

Instance Number	0020,0013	IS		ALWAYS	COPY	

8.1.2. Usage of Attributes from Received IOD

Not applicable.

8.1.3. Attribute Mapping

Not applicable.

8.1.4. Coerced/Modified fields

Not applicable.

8.2. Data Dictionary of Private Attributes

Not applicable.

8.3. Coded Terminology and Templates

Not applicable.

8.3.1. Context Groups

Not applicable.

8.3.2. Template Specifications

Not applicable.

8.3.3. Private code definitions

Not applicable.

8.4. Grayscale Image consistency

Not applicable.

8.5. Standard Extended/Specialized/Private SOPs

Not Applicable.

8.6. Private Transfer Syntaxes

Not applicable.

- This page is left intentionally empty -

Issued by:
Philips Medical Systems Nederland B.V.
Veenpluis 6
5684 PC Best
The Netherlands
Note that the address is also known as “Veenpluis 4-6”, which refers to the same physical location.

Internet: https://www.philips.com/dicom
Doc Id: 1840908
Date: 12-Dec-2024