Professional TV

65" Hospitality TV

powered by Android™

65HFL4518U/12

Vibrant and smart

with Google Cast™

This Hospitality TV is a perfect performer when you just want everything to look and sound great. Google Cast™ makes streaming fast and easy, while Android™ and Google Play Store unleash infinite possibilities.

Android-powered. Ready for anything.

- Google Cast™ for easy content sharing
- Google Play Store access for apps and media
- Comes with a hygienic remote control

Rapid installation. Total control.

- Instant Initial Cloning. Rapidly install your Pro TVs
- AppControl. Install and manage apps remotely and securely
- Operate, monitor and maintain via CMND & Control
- Information you want, when you want by use of CMND & Create
- CMND & Check-in. Personalize every experience
- MyChoice compatible. Built-in pay-to-view solution

Cost-effective with reliable support

- 3 years warranty

Highlights

Google Cast
Enable instant, secure wireless casting of movies, presentations, and more from smart devices (mobiles, laptops, tablets) in up to 4K resolution. Google Cast is cost-effective, requires no extra hardware, and is secure for professional use. Users simply tap the cast icon on their smart device to start streaming content from thousands of cast-enabled apps-their smart device becomes the remote.

Google Play Store access
Full access to the entire Google Play Store makes it easy to add apps, games, music, movies, and more to your Philips Professional Display. New business tools and extra entertainment options are added to the catalogue daily, ensuring that you always have access to the latest global trends.

AppControl
Take full, centralized control of the apps installed on your Philips Professional TVs. AppControl lets you install, delete, and manage apps on selected TVs or your entire network. Giving you the ability to offer personalized experiences to your guests and customers-no matter how many TVs you are managing.

CMND & Control
Run your display network over a local LAN connection. CMND & Control allows you to perform vital functions like updating software and settings, as well as monitoring display status. Whether you're in charge of one display or more, CMND & Control makes managing your fleet easy.

CMND & Create.
CMND & Create is a powerful authoring tool for creating compelling content. With its drag and drop interface, preloaded templates and integrated widgets, you'll be amazing customers with your content and information in no time.

CMND & Check-in
Make your guests feel welcome. CMND & Check-in lets you use individual information - such as name and language spoken - to create a personalized experience.

MyChoice compatible
Offer pay-to-view content in any situation-from a complete pay-to-access-all-channels model to selected premium content. MyChoice is an integrated solution that allows viewers to access pay-per-view channels via a code.

Specifications

Picture/Display
Diagonal screen size (inch): 65 inch
Diagonal screen size (metric): 164 cm
Display: 4K Ultra HD LED
Panel resolution: 3840x2160p
Brightness: 350 cd/m²
Viewing angle: 178º (H) / 178º (V)

Tuner/Reception/Transmission
Digital TV: DVB-T/T2/C, DVB-S/S2
IP Playback: Unicast, Multicast, OTT App Channels

Android TV
OS: Android TV™ 11 (R)
Pre-installed apps: YouTube, Google Play Movies, Google Play Games, Google Play Store*, YouTube Music
Memory size(Flash): 16GB*

Hospitality Features
Hotel mode: Installation Menu Lock, Local Control Lock, Volume limitation (incl. HP), Switch-ON Settings Control, Prison mode
Power control: WoWLAN, WoLAN, Quick Start Mode, Auto Power OFF
Apps: AppControl, Google Play Store
Your brand: Customizable Welcome App, CMND&Create
CMND&Control: Off-Line Channel Editor, Off-Line Settings Editor, TV Group management, Remote Management over IP, Local Updates via USB, Instant Initial Cloning
Interactive DRM: Playready Smoothstreaming
Revenue generation: MyChoice
Remote Control: Low Battery Detection, RC Battery Door Lock, Hygienic
CMND&Check-In: Guest Name, Guest Language
Sharing: Secure Sharing, Network-managed Sharing, Chromecast Ultra built-in
Convenience: Sleep Timer, Google Assistant*, Google Account Login, >40 Supported Menu Languages

Healthcare features
Control: Multi-Remote Control, Nurse call system compatible
Convenience: Headphone out, Independent main speaker mute
Safety: Double isolation class II, Flame retardant

Multimedia
Video playback supported: Containers: AVI, MKV, Formats: H.264/MPEG4 AVC, MPEG1, MPEG2, MPEG4, VP9, HEVC, AV1
Music formats supported: MP3, WAV, AAC, WMA (v2 up to v9.2), WMA-PRO (v9 and v10)
Subtitle formats supported: SRT, SMI, SSA SUB, ASS, TXT
Picture formats supported: JPG, GIF, PNG, BMP

Audio
Sound output Power: 20 (2x10) W
Bathroom speaker out: 1.5W Mono 8Ohm
Speakers: 2.0, Down Firing
Sound Features: DTS Studio Sound, Dolby MS12D, AC-4, DTS-HD, Dolby Atmos Compatible

Power
Mains power: AC 220-240V; 50-60Hz
Ambient temperature: 0 °C to 40 °C
Standby power consumption: 0.3W
Power Saving Features: Light sensor, Eco mode, Auto switch-off timer

Specifications

Accessories
Included: Edge Stand, Legal and Safety brochure, Power Cord, 2x AA batteries, Hygienic RC 22AV2304A
Optional: Setup RC 22AV9574A/12, Easy RC 22AV1601B/12, DOCSIS Cable Modem 22AV1970A

Wireless Connectivity
Wireless LAN: Dual band, 802.11 b/g/n, 802.11 ac, Wifi-Direct, 2x2
Bluetooth: 5.0, A2DP, SBC

Connectivity Bottom
HDMI2: HDMI 2.0
Digital Audio out: Optical
Ethernet (LAN): RJ-45
HDMI3: HDMI 2.0
Bathroom speaker out: Mini-Jack
Antenna Input: IEC-75, F-Type
IR in/out: Mini-Jack

Connectivity Side
Common Interface Slot: CI+ 1.4
HDMI1: HDMI 2.0
Headphone out: Mini-Jack
USB1: USB 2.0

Connectivity Enhancements
EasyLink (HDMI CEC): One touch play, System Standby, system audio control, RC pass through
HDMI: ARC (HDMI1), HDCP 2.3 (all ports)

Dimensions
Set Width: 1447 mm
Set Height: 837 mm
Set Depth: 48/80 mm
Product weight: 20 kg
Set width (with stand): 1447 mm
Set height (with stand): 864 mm
Set depth (with stand): 289 mm
Product weight (+stand): 20.5 kg
Wall mount compatible: 200 x 200 mm, M6

EU Energy card
EPREL registration numbers: 1827415
Energy class for SDR: F
On mode power demand for SDR: 88 kWh/1000h
Energy class for HDR: E
On mode power demand for HDR: 70 kWh/1000h

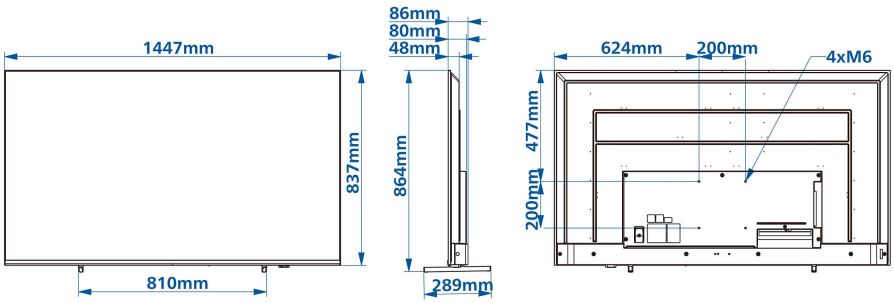

* Availability of features will depend on implementation chosen by integrator.
* This television contains lead only in certain parts or components where no technology alternatives exist in accordance with existing exemption clauses under the RoHS Directive.
* Philips does not guarantee the availability or continuity of correct functioning of apps.
* Actual free memory may be less due to device pre-configuration
* Android, Google Play and Chromecast are trademarks of Google LLC
* Google Cast requires access to Google servers.
* This product is intended for use in professional installations and in hospitality settings only (including but not limited to hotels and holiday homes) and is not suitable for domestic purposes. Any use other than that for which this device is intended can void the warranty.

© 2026 Koninklijke Philips N.V.
All Rights reserved.

Issue date 2026-05-10
Version: 6.6.1

EAN: 87 18863 03601 3

Specifications are subject to change without notice. Trademarks are the property of Koninklijke Philips N.V. or their respective owners.

www.philips.com