PHILIPS

7314-430J1U-25035821

Television

Quick Start Guide

7300 Series

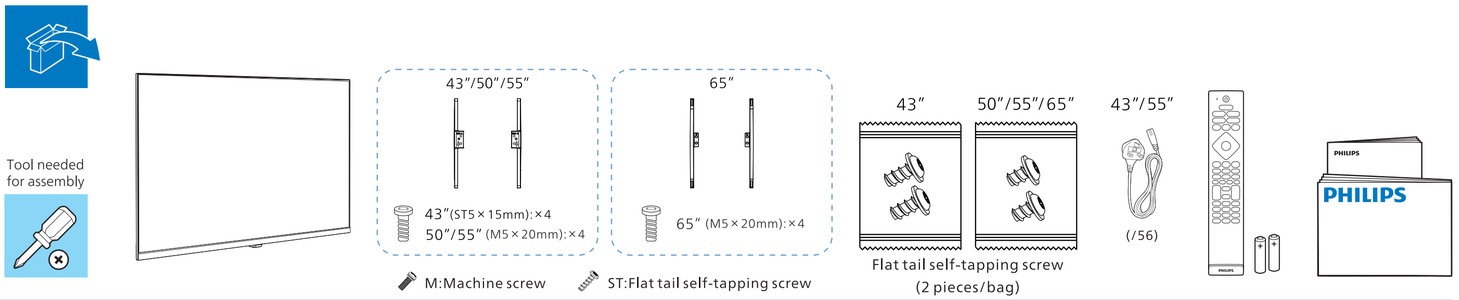

1 43”/50”/55”

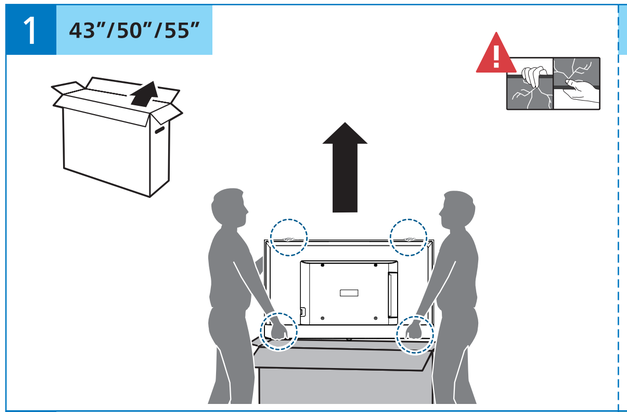

65”

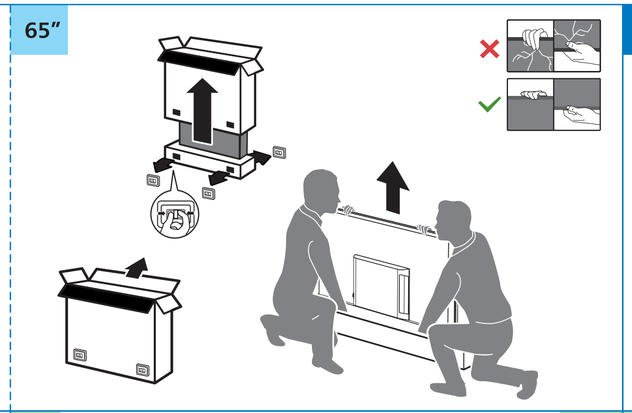

2 43”/50”/55”/65”

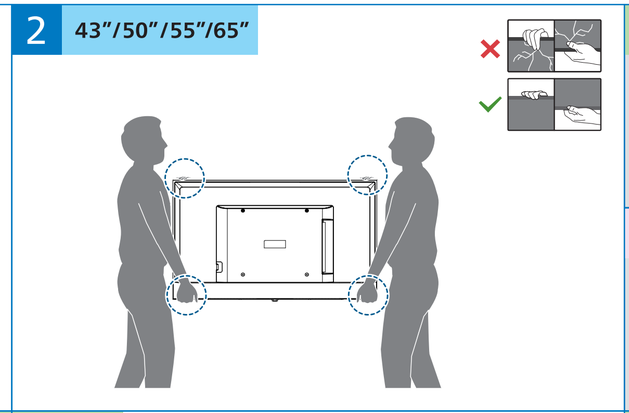

A Desk Placement

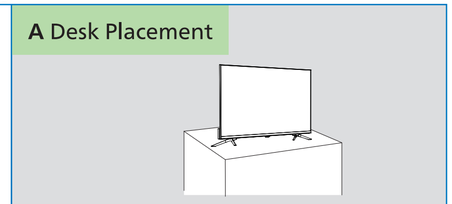

B Wall Placement

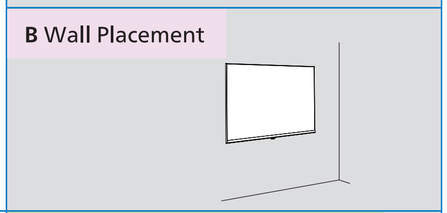

3

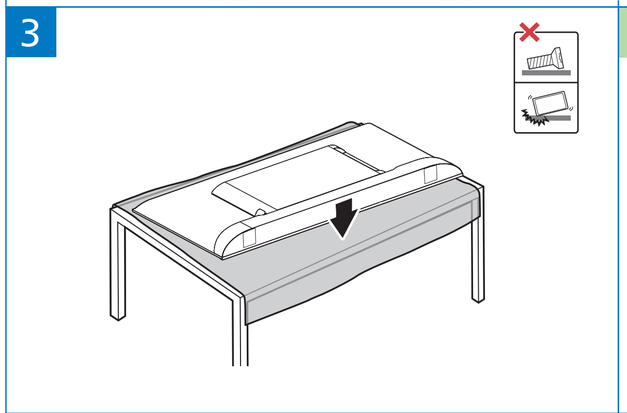

A

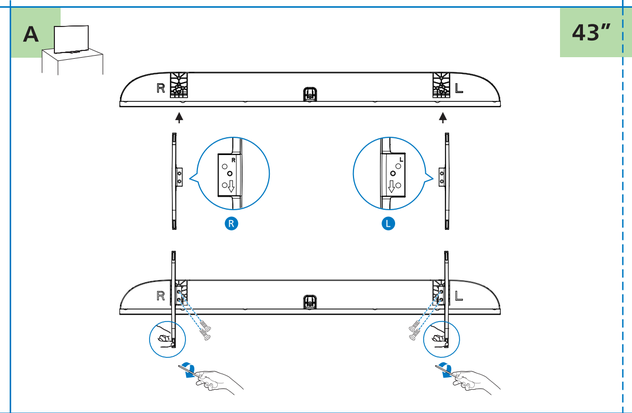

43”

50”/55”

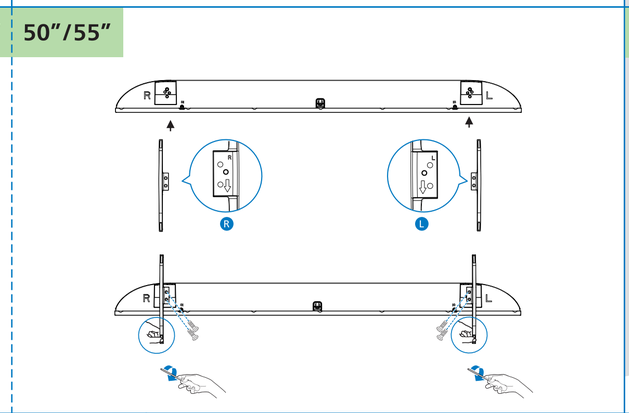

Desk Placement (using table stand)

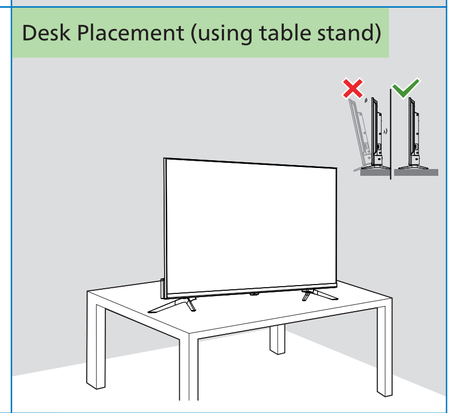

65”

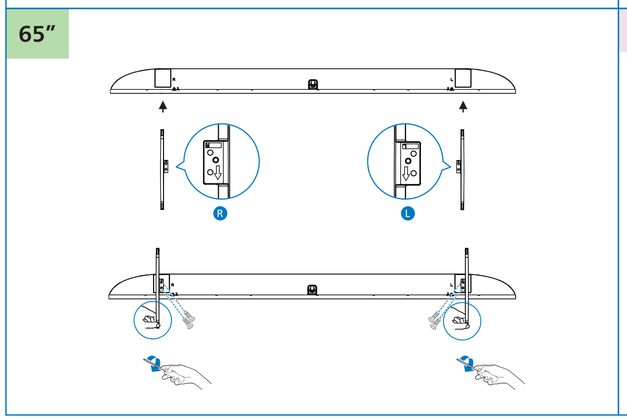

B

Diagonal (inch/cm)	X (mm)	Y (mm)	Screw Size	Screw Length (mm)
43”/108	300	300	Up: M4 Down: ST4	9.5~10.5 9.5~10.5
50”/126	300	300	Up: M6 Down: ST6	20.5~32 8~11.5
55”/139	300	300	Up: M6 Down: ST6	20.5~32 8~11.5
65”/164	300	300	Up: M6 Down: ST6	20.5~32 8~11.5

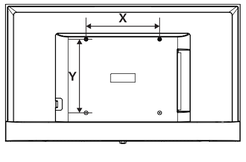

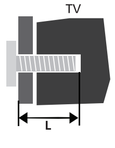

Recommended Wall Distance

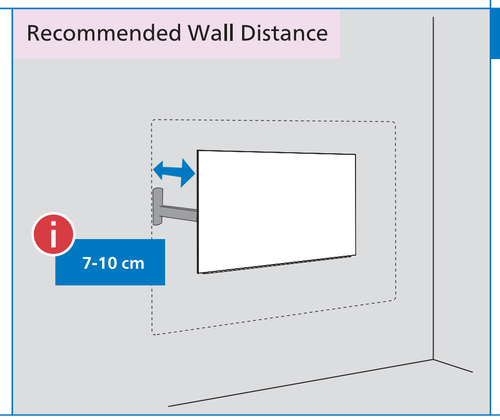

4 Register and Support

www.philips.com/TVsupport

Register your TV, find out more, download the user manual and get support

1

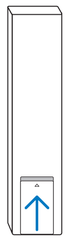

To install batteries, slide the battery door up.

2

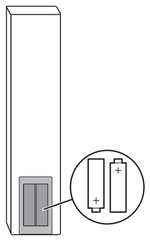

Use 2x AAA 1.5V (included)

3

Slide battery door back in place.

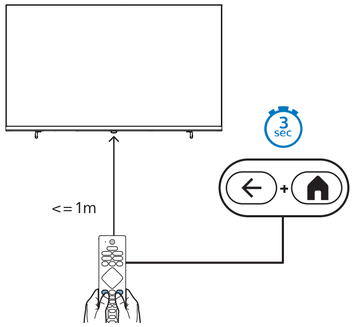

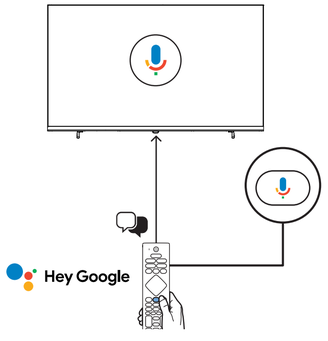

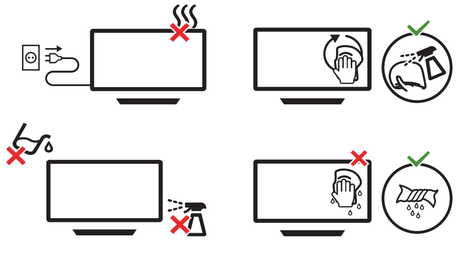

English Read the safety instructions.
Bahasa Malaysia Baca arahan Keselamatan.
Bahasa Indonesia Baca petunjuk keselamatan.
Deutschh Lesen Sie die Sicherheitshinweise.
Français Lisez les consignes de sécurité.
Português Leia as instruções de segurança.
ภาษาไทย โปรดอ่านคำแนะนำด้านความปลอดภัย
Tiếng Việt Hãy đọc chỉ dẫn an toàn.
简体中文 请阅读安全说明。
العربية قراءة تعليمات السلامة.

43”/50”/55”/65”

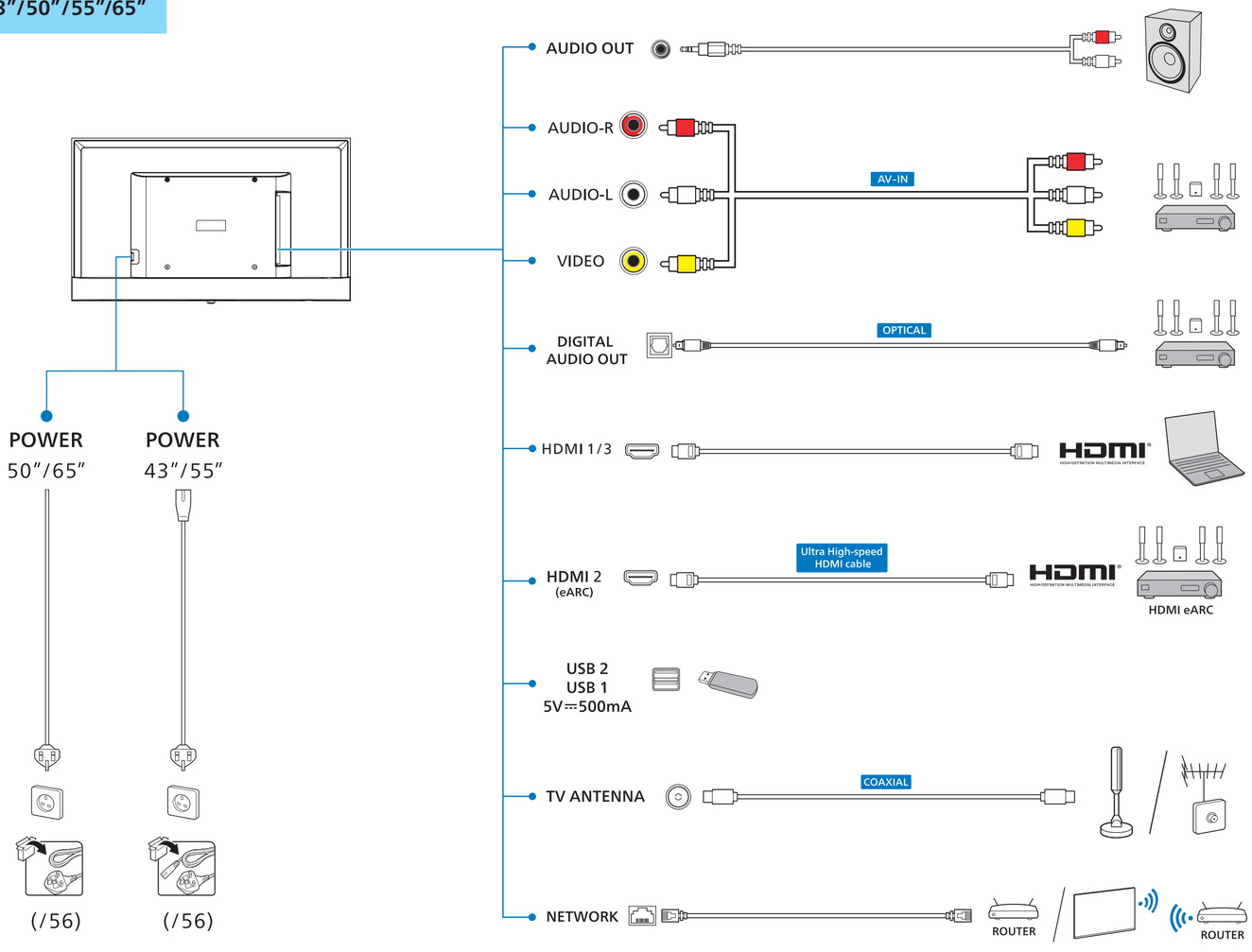

All registered and unregistered trademarks are property of their respective owners.
Specifications are subject to change without notice.
Philips and the Philips Shield Emblem are registered trademarks of Koninklijke Philips N.V. and are used under license.
This product has been manufactured by and is sold under the responsibility of TP Vision Europe B.V., and TP Vision Europe B.V. is the warrantor in relation to this product.
2025© TP Vision Europe B.V. All rights reserved.
www.philips.com/welcome