Always there to help you

Register your product and get support at
www.philips.com/welcome

DCB3270

Question?
Contact
Philips

User manual

PHILIPS

Contents

1 Safety 2
Know these safety symbols 2
Important safety instructions 2
Hearing safety 3

2 Your micro music system 4
Introduction 4
What's in the box 4
Overview of the main unit 4
Overview of the remote control 5

3 Before use 7
Connect the radio antenna 7
Connect power 7
Install the remote control battery 8

4 Get started 8
Turn on 8
Set the clock 9
Select a source 9
Adjust the brightness of LCD display 9

5 Play from hard media 10
Play a disc 10
Play from a USB storage device 10
Control play 10
Program tracks 11

6 Use the dock 11
Compatible iPod/iPhone/iPad models 11
Enjoy audio through the dock 12
Charge your iPod/iPhone/iPad 13
Unload your iPod/iPhone/iPad 13

7 Listen to FM radio 13
Tune to an FM radio station 13
Program radio stations automatically 14
Program radio stations manually 14
Tune to a preset radio station 14
Display RDS information 14
Adjust FM settings 14

8 Listen to DAB radio stations 15
Use for the first time 15
Tune to a stored station 15
Program radio stations 15
Display DAB information 16
Use DAB menus 16

9 Adjust sound 17
Select a preset sound effect 17
Adjust volume level 17
Mute sound 17

10 Other features 17
Use the alarm timer 17
Use the sleep timer 18
Listen to an external device 18
Listen through headphone 18
Charge your USB device 19

11 Use system menus 19
Check the current software version 19
Reset the product 19
Upgrade the software 20

12 Product information 20
Specifications 20
USB playability information 21
Supported MP3 disc formats 21
Maintenance 22

13 Troubleshooting 22

14 Notice 24
Compliance 24
Care of the environment 24
Trademark notice 25
Copyright 25

1 Safety

Read and understand all instructions before you use this micro music system. If damage is caused by failure to follow the instructions, the warranty does not apply.

Know these safety symbols

This 'bolt of lightning' indicates uninsulated material within your unit may cause an electric shock. For the safety of everyone in your household, please do not remove product covering.

The 'exclamation mark' calls attention to features for which you should read the enclosed literature closely to prevent operating and maintenance problems.

WARNING: To reduce the risk of fire or electric shock, this apparatus should not be exposed to rain or moisture and objects filled with liquids, such as vases, should not be placed on this apparatus.

CAUTION: To prevent electric shock, fully insert the plug. (For regions with polarized plugs: To prevent electric shock, match wide blade to wide slot.)

Important safety instructions

Risk of electric shock or fire!

- Never expose the product and accessories to rain or water. Never place liquid containers, such as vases, near the product. If liquids are spilt on or into the product, disconnect it from the power outlet immediately. Contact the Consumer Care to have the product checked before use.
- Never place the product and accessories near naked flames or other heat sources, including direct sunlight.
- Never insert objects into the ventilation slots or other openings on the product.
- Where the mains plug or an appliance coupler is used as the disconnect device, the disconnect device shall remain readily operable.
- Disconnect the product from the power outlet before lightning storms.
- When you disconnect the power cord, always pull the plug, never the cable.

Risk of short circuit or fire!

- Before you connect the product to the power outlet, make sure that the power voltage matches the value printed on the back of the product. Never connect the product to the power outlet if the voltage is different.
- Never expose the remote control or batteries to rain, water, sunshine, or excessive heat.
- Avoid force coming onto power plugs. Loose power plugs can cause arcing or fire.

Risk of injury or damage to the product!

- Use only power supplies listed in the user manual.
- Visible and invisible laser radiation when open. Avoid exposure to beam.
- Do not touch the disc optical lens inside the disc compartment.
- Never place the product or any objects on power cords or on other electrical equipment.

- If the product is transported in temperatures below 5°C, unpack the product and wait until its temperature matches room temperature before connecting it to the power outlet.

Risk of overheating!
- Never install this product in a confined space. Always leave a space of at least four inches around the product for ventilation.
- Make sure that curtains or other objects never cover the ventilation slots on the product.

Risk of contamination!
- Remove the battery if it is exhausted or if the remote control is not to be used for an extended period of time.
- Batteries contain chemical substances, they should be disposed of properly.

Warning

- Never remove the casing of this apparatus.
- Never lubricate any part of this apparatus.
- Never place this apparatus on other electrical equipment.
- Keep this apparatus away from direct sunlight, naked flames or heat.
- Never look into the laser beam inside this apparatus.
- Ensure that you always have easy access to the power cord, plug or adaptor to disconnect this apparatus from the power.

Hearing safety

Listen at a moderate volume.
- Using headphones at a high volume can impair your hearing. This product can produce sounds in decibel ranges that may cause hearing loss for a normal person, even for exposure less than a minute. The higher decibel ranges are offered for those that may have already experienced some hearing loss.
- Sound can be deceiving. Over time your hearing 'comfort level' adapts to higher volumes of sound. So after prolonged listening, what sounds 'normal' can actually be loud and harmful to your hearing. To guard against this, set your volume to a safe level before your hearing adapts and leave it there.

To establish a safe volume level:
- Set your volume control at a low setting.
- Slowly increase the sound until you can hear it comfortably and clearly, without distortion.

Listen for reasonable periods of time:
- Prolonged exposure to sound, even at normally 'safe' levels, can also cause hearing loss.
- Be sure to use your equipment reasonably and take appropriate breaks.

Be sure to observe the following guidelines when using your headphones.
- Listen at reasonable volumes for reasonable periods of time.
- Be careful not to adjust the volume as your hearing adapts.
- Do not turn up the volume so high that you can't hear what's around you.
- You should use caution or temporarily discontinue use in potentially hazardous situations.

Note

- The type plate is located on the back of the product.

2 Your micro music system

Congratulations on your purchase, and welcome to Philips! To fully benefit from the support that Philips offers, register your product at www.philips.com/welcome.
If you contact the Consumer Care, you will be asked for the model and serial number of this apparatus. The model number and serial number are on the rear of the apparatus. Write the numbers here:
Model No. _____
Serial No. _____

Introduction

With this product, you can:

- enjoy audio from discs, USB storage devices, iPod/iPhone/iPad, and other external devices, and
- listen to FM and DAB radio stations.

What's in the box

Check and identify the contents of the package:

- Micro music system
- Remote control (with one AAA battery)
- AC power adaptor (with 2 plug converters)
- Wall mounting kit (2 dowels and 2 screws)
- FM antenna
- Safety sheet
- Short user manual
- Wall mounting instructions

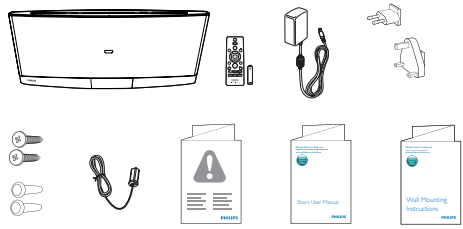

Overview of the main unit

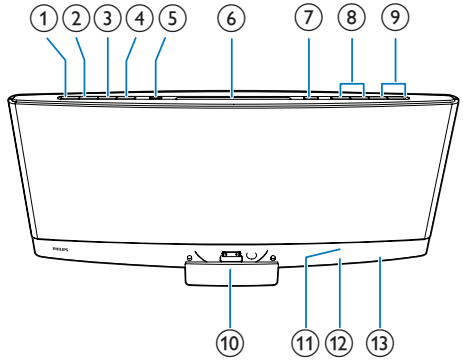

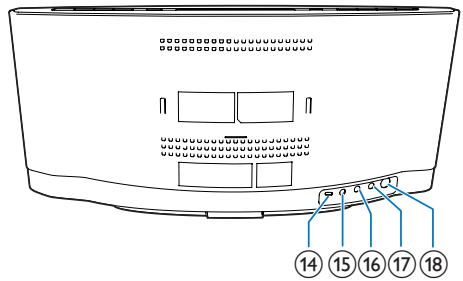

① ⏻
- Turn on the product.
- Switch the product to eco power standby mode or normal standby mode.

② SOURCE
- Press repeatedly to select a source.

③ ▶II
- Start, pause, or resume play.

④ ■
- Stop the play of music.
- Access the playlist of a docked iPod/ iPhone.

⑤
- Connect a compatible USB storage device for music play.
- Connect a compatible USB device for charging.

⑥ Disc compartment

⑦ ⏏
- Press to eject the disc from the disc compartment.

⑧ ⏮ / ⏭
- Skip to the previous or next track.
- Press and hold to search within a track.
- Tune to a radio station.

⑨ VOL+/VOL-
- Increase or decrease the volume level.

⑩ Dock for iPod/iPhone/iPad
- Connect to a compatible iPod/iPhone/ iPad.

⑪ IR sensor
- Receive infrared signals from the remote control.

⑫ Indicator
- It lights red when the product is in the eco power standby mode.

⑬ LCD screen

⑭ Micro USB socket
- This socket is for firmware upgrade only.

⑮ DC IN
- Connect to the AC power adaptor.

⑯
- Connect to a headphone with 3.5-mm connector.

⑰ AUDIO IN
- Connect to the audio output socket (usually the headphone socket) of an external device.

⑱ FM ANT
- Connect to the FM antenna.

Overview of the remote control

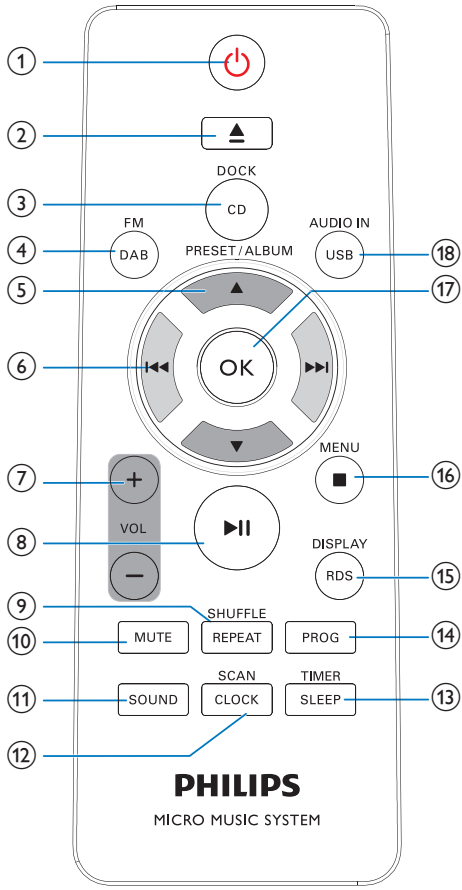

① ⏻
- Turn on the product.
- Switch the product to eco power standby mode or normal standby mode.

② ⏏
- Eject the disc.

③ DOCK/ CD
- Switch the source to the connected iPod/iPhone/iPad or the disc in the disc compartment.

④ FM/DAB
- Switch the source to FM tuner or DAB tuner.

⑤ PRESET/ALBUM ▲ / ▼
- Skip to the previous or next album.
- Select a preset radio station.
- Navigate through iPod/iPhone playlist.

⑥ ⏮ / ⏭
- Skip to the previous or next track.
- Press and hold to search within a track.
- Tune to a radio station.
- Select a menu option.

⑦ + VOL -
- Increase or decrease the volume level.

⑧ ⏯
- Start, pause, or resume play.
- In FM mode, press to switch the sound setting between stereo and monophonic.

⑨ REPEAT/SHUFFLE
- Select a play mode.

⑩ MUTE
- Mute or restore volume.

⑪ SOUND
- Select a preset sound effect.

⑫ SCAN/CLOCK
- In normal standby mode, press and hold to start setting the clock.
- In working mode, press to display the clock.
- In FM or DAB mode, press and hold to start scanning for FM stations.

⑬ TIMER/SLEEP
- Set the alarm timer.
- Set the sleep timer.

⑭ PROG
- Program radio stations.
- Program tracks that are stored on a disc or USB storage device.

⑮ DISPLAY/RDS
- In working mode, press to toggle through available information.
- In normal standby mode, press and hold to adjust the brightness of LCD display.

⑯ ■ /MENU
- Stop the play of music.
- Access the playlist of iPod/iPhone.
- In FM or DAB mode, access the menus.

⑰ OK
- Confirm the current option.
- In FM mode, press to switch the sound setting between stereo and monophonic.

⑱ USB/AUDIO IN
- Switch the source to USB storage device or the audio input that is transferred through the **AUDIO IN** socket.

3 Before use

Connect the radio antenna

Note

- For optimal reception, fully extend the antenna and adjust its position, or connect an outdoor antenna.
- This product does not support AM (amplitude modulation) radio reception.

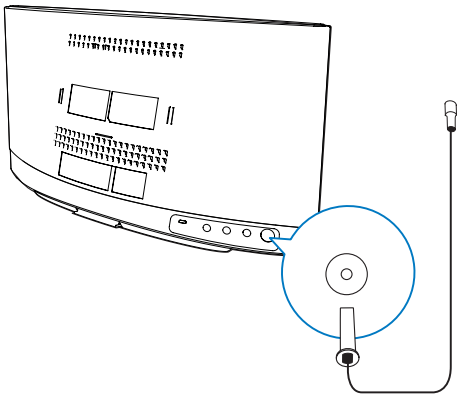

Connect the radio antenna to the product.

Connect power

Caution

- Risk of product damage! Make sure that the power supply voltage matches the voltage printed on the back of the main unit.
- Risk of electric shock! Before you plug the AC power adaptor, make sure that the adaptor plug converter is fixed securely. When you unplug the AC power adaptor, always pull the plug, never the cord.
- Before you connect the AC power adaptor, make sure that you have completed all the other connections.

1 Select an adaptor plug converter and fix it to the adaptor.

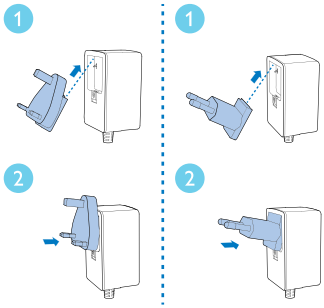

2 Connect the AC power adaptor to
- the **DC IN** socket on the back panel, and
- the wall outlet.

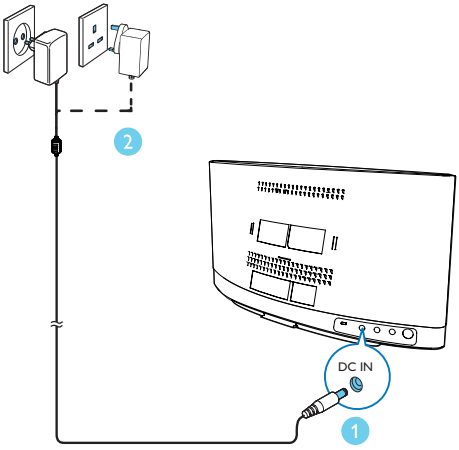

Remove the plug converter

To replace a plug converter, remove it first as illustrated below.

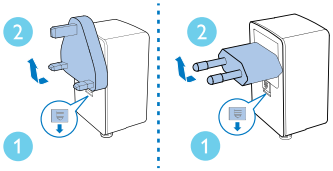

Install the remote control battery

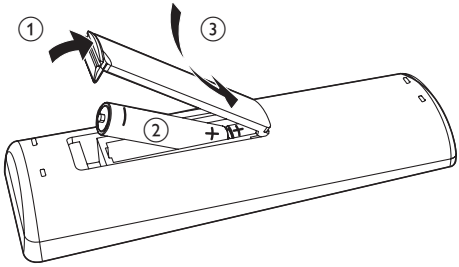

1 Open the battery compartment.
2 Insert one AAA battery with correct polarity (+/-) as indicated.
3 Close the battery compartment.

4 Get started

Caution

- Use of controls or adjustments or performance of procedures other than herein may result in hazardous radiation exposure or other unsafe operation.

Always follow the instructions in this chapter in sequence.

Turn on

Press ⏻.

↳ This product switches to the last selected source.

Switch modes

Automatically switch the modes:

- After this product stays inactive for 15 minutes, it automatically switches to the normal standby mode.
  - ↳ The clock is displayed.
  - ↳ If the clock is not set, ····· blinks.
- After this product stays in the normal standby mode for 15 minutes, it automatically switches to the eco power standby mode.
  - ↳ ECOPOWER scrolls, and then the LCD screen lights off.
  - ↳ The LED indicator beside the LCD screen lights in red.

Manually switch the modes:

- Press and hold ⏻ to switch this product
  - from the working mode or normal standby mode to the eco power standby mode, or
  - from the eco power standby mode to the normal standby mode.

- Press ⏻ to switch this product
  - between the working mode and the normal standby mode, or
  - from the eco power standby mode to the working mode.

Set the clock

Note

- During setting, if no action is made within 90 seconds, the product exits clock setting without saving earlier operations.

1. In standby mode, press and hold **CLOCK** to enter the clock setting mode.
   ↳ 24H or 12H is displayed.
2. Press **+VOL -** or **I◀◀ / ▶▶I** to select 24H or 12H, and then press **CLOCK**.
   - 24H: 24-hour time format
   - 12H: 12-hour time format
   ↳ The hour digits begin to blink.
3. Press **+VOL -** or **I◀◀ / ▶▶I** to set the hour, and then press **CLOCK**.
   ↳ The minute digits begin to blink.
4. Press **+VOL -** or **I◀◀ / ▶▶I** to set the minute, and then press **CLOCK**.
5. Press **+VOL -** or **I◀◀ / ▶▶I** to select SYNC ON or SYNC OFF, and then press **CLOCK**.
   - SYNC ON: When you tune to an RDS station that transmits time signals, the product automatically synchronizes its clock with the RDS station.
   - SYNC OFF: Not synchronize the clock automatically.
   ↳ The set clock is displayed.

Tip

- This product will synchronize its clock with the current DAB station or the connected iPod/iPhone/iPad.

Select a source

On the product, press **SOURCE** repeatedly to select a source.

- iPOD / iPHONE / iPAD: the playlist on the connected iPhone/iPod/iPad
- AUDIO IN: the audio input through the **AUDIO IN** socket
- DISC: the disc in the disc compartment
- USB: .mp3 files stored on the connected USB storage device
- DAB: the DAB tuner
- TUNER: the FM tuner

You can also press source buttons on the remote control to select a source.

- **FM/DAB**: the FM tuner or DAB tuner
- **DOCK/CD**: the playlist on the connected iPhone/iPod/iPad or the disc in the disc compartment
- **AUDIO IN/USB**: the audio input through the **AUDIO IN** socket, or the .mp3 files stored on the connected USB storage device

Adjust the brightness of LCD display

1. In normal standby mode, press and hold **DISPLAY** until B 0, B 02, or B 03 is displayed.
2. Press **VOL +/-** or ▲ / ▼ to select B 0, B 02, or B 03.

5 Play from hard media

Play a disc

Note

- Make sure that the disc contains playable audio content.

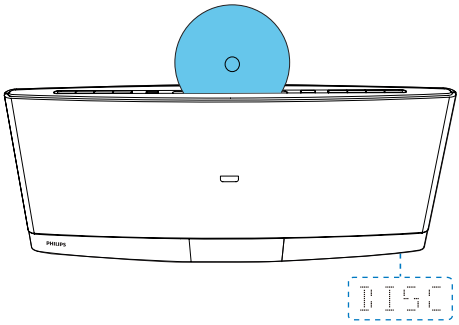

1 Press **CD** or **SOURCE** to switch the source to DISC.

2 Insert a disc into the disc compartment with the printed side facing you.
   ↳ Play starts automatically after a few seconds.
   ↳ If play does not start automatically, press ▶II to start play.

Play from a USB storage device

This product can play .mp3 files that are copied onto a compatible USB storage device.

- Flash drive
- Memory card reader
- HDD: hard disc drive (This product can detect only a portable HDD with USB power peak current no more than 500 mA.)

Note

- WOOX Innovations does not guarantee compatibility with all USB storage devices.
- FAT16 and FAT 32 file systems are supported, and NTFS (New Technology File System) not.

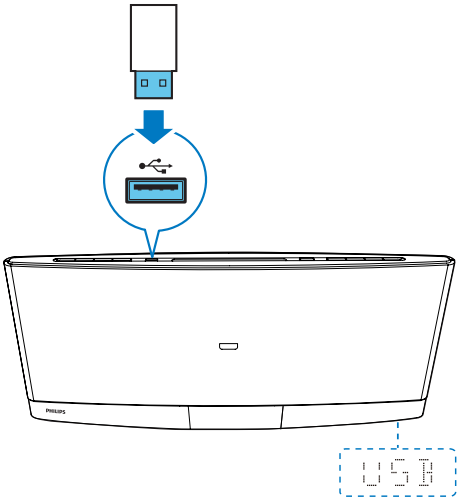

1 Connect the USB storage device to the ⇢ socket.

2 Press **USB** or **SOURCE** to switch the source to USB.
   ↳ Play starts automatically.

If play does not start automatically,

1 Press ▲ / ▼ to select a folder.

2 Press I◀◀ / ▶▶I to select a file.

3 Press ▶II to start play.

Control play

During play, follow the instructions below to control play.

Buttons	Functions
▶II	Pause or resume play.
■	Stop play.

Buttons	Functions
⏮ / ⏭	Skip to the previous or next track.
⏮ / ⏭	Press and hold to rewind a track or search forward fast.
▲ / ▼	Skip to the previous or next album when one or more albums exist.
REPEAT/SHUFFLE	Select an available play mode. • RPT ONE: repeat the current track • RPT ALL: repeat all tracks • RPT ALB: repeat the current folder • SHUF ON: play tracks randomly • To play tracks in sequence, press repeatedly until **REP** and **SHUF** disappear.

Program tracks

You can program a maximum of 20 tracks.

1. When no track is played, press **PROG**.
   ↳ The current track number blinks on the display panel.
2. Press ⏮ / ⏭ to select a track number.
3. Press **PROG** to confirm.
4. Repeat steps 2 and 3 to program more tracks.
5. Press ▶❚❚ to play the programmed tracks.
   • To erase the program, press ■ twice.

6 Use the dock

You can enjoy audio from iPod/iPhone/iPad through this product.

Note

- There is no audio output from the headphone socket of the connected iPod/iPhone/iPad.

Compatible iPod/iPhone/iPad models

This product supports the following iPod, iPhone, and iPad models.

- iPod nano (2nd, 3rd, 4th, 5th, 6th, and 7th generation)
- iPod touch (1st, 2nd, 3rd, 4th, and 5th generation)
- iPod classic
- iPhone 5
- iPhone 4S
- iPhone 4
- iPhone 3GS
- iPhone 3G
- iPhone
- iPad mini
- iPad 4th generation
- iPad 3rd generation
- iPad 2
- iPad

Enjoy audio through the dock

1 Press **DOCK** or **SOURCE** to switch the source to iPOD, iPHONE, iPAD.

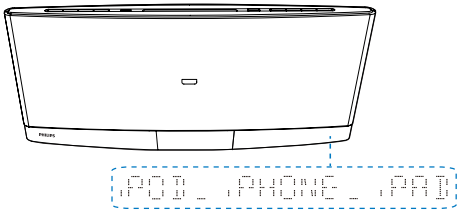

2 Eject the dock.

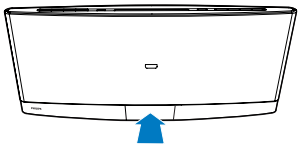

3 Turn the dock tray to select a connector that matches your iPod/iPhone/iPad.

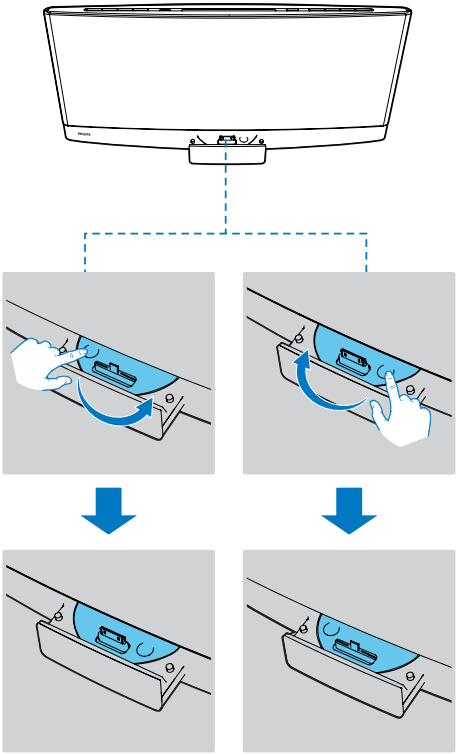

4 Connect your iPod/iPhone/iPad to the dock.

↳ Once the iPod/iPhone/iPad is recognized, the charging starts.

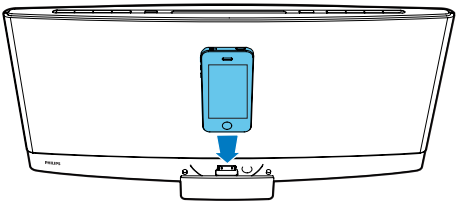

5 Play a track on your iPod/iPhone/iPad.

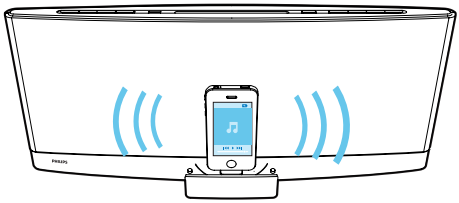

Buttons	Functions
▶II	Start, pause, or resume play.
MENU/ ■	Access the playlist of iPod/iPhone.
▲ / ▼	Navigate through the playlist of iPod/iPhone.
I◀◀ / ▶▶I	Skip to the previous/next track.
	Press and hold to rewind a track or search forward fast.

Charge your iPod/iPhone/iPad

Once the iPod/iPhone/iPad is docked and recognized, the charging starts.

Unload your iPod/iPhone/iPad

Note

- Risk of damage to the dock or your iPod/iPhone/iPad: Do not twist or shake your iPod/iPhone/iPad during unloading.

1 Pull the iPod/iPhone/iPad out of the dock.
2 Press inside to hide the dock.

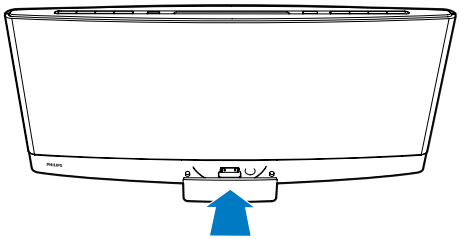

7 Listen to FM radio

Tune to an FM radio station

Note

- Make sure that you have connected and fully extended the FM antenna.

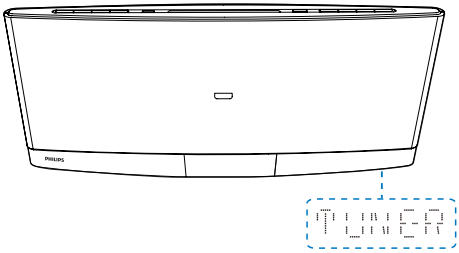

1 Press **FM** or **SOURCE** repeatedly to switch the source to TUNER.
2 Press and hold I◀◀ / ▶▶I until the frequency starts to change.
   ↳ The product automatically tunes to the previous or next station with strong reception.
   - To tune to a station at a specific frequency, press I◀◀ / ▶▶I repeatedly until its frequency is displayed.

Tip

- In FM mode, you can press ▶II or **OK** to switch the sound setting between stereo and monophonic.

Program radio stations automatically

Note

- You can program a maximum of 20 preset radio stations.

Press and hold **SCAN/CLOCK** until the frequency starts to change.

↳ All available stations are programmed in the order of waveband reception strength.

↳ The first programed radio station is broadcast automatically.

Program radio stations manually

Note

- You can program a maximum of 20 preset radio stations.
- To overwrite a programmed radio station, store another one with its sequence number.

1 Tune to a radio station.

2 Press **PROG** to activate programming.
↳ The sequence number blinks.

3 Press ▲ / ▼ to allocate a sequence number from 1 to 20 to this radio station, and then press **PROG** to confirm.
↳ The preset sequence number and the frequency of this radio station are displayed.

4 Repeat steps 1-3 to program more stations.

Tune to a preset radio station

Press ▲ / ▼ to select the sequence number of the preset radio station.

Display RDS information

RDS (Radio Data System) is a service that allows FM stations to transfer additional information. If you tune to an RDS station, an RDS icon is displayed.

1 Tune to an RDS station.

2 Press **RDS** repeatedly to scroll through the following information (if available):
↳ Program service
↳ Program type such as **[NEWS]** (news), **[SPORT]** (sport), **[POP M]** (pop music)...
↳ Radio text message
↳ Mono/Stereo
↳ Time

Adjust FM settings

1 In FM mode, press **MENU** to access the SCAN menu.

2 Press **OK** to access sub-menus.

3 Press **I◀◀ / ▶▶I** to select an option.
- STRONG: Search for strong stations only.
- ALL: Search for all stations no matter whether the signal strength of a station is strong or weak.

4 Press **OK** to confirm the option.

8 Listen to DAB radio stations

Note

- For optimal reception, fully extend the antenna and adjust its position.
- You can program a maximum of 20 DAB radio stations.
- Check with local retailer or go to www.WorldDAB.org for applicable DAB radio frequencies in your area.

Use for the first time

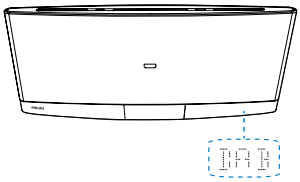

1 Press **DAB** or **SOURCE** to switch the source to DAB.

2 Press ⏮ / ⏭ until the FULL SCAN menu is displayed.

3 Press **OK** to activate the automatic search.
   ↳ This product automatically stores radio stations with sufficient signal strength.
   ↳ After the search is complete, the first stored radio station is broadcast automatically.

4 Press ⏮ / ⏭ to select a station, and then press **OK** to start listening.

- To re-scan for DAB stations, press and hold **SCAN/CLOCK** for 2 seconds when listening to a DAB station.

Tip

- You can re-scan to update the list of stored stations (see "**Use DAB menus**" > "**Re-scan for stations**").
- You can tune to a station manually (see "**Use DAB menus**" > "**Tune to a station manually**").

Tune to a stored station

1 Switch the source to DAB.
   ↳ The last listened station is broadcast.

2 Press ⏮ / ⏭ to select a station, and then press **OK** to start listening.

Note

- If ? is displayed before the name of current station, the station is unavailable or inactive.

Program radio stations

1 Tune to a DAB radio station.

2 Press **PROG** to activate the programming.

3 Press ▲ / ▼ to select a preset sequence number.

4 Press **PROG** to confirm.
   ↳ The radio station is stored with the selected sequence number.

5 Repeat steps 1-4 to program more radio stations.

- To tune to a preset radio station, press ▲ / ▼ until its name is displayed.

Note

- If you store a radio station with the sequence number of another one, the earlier one is overwritten.

Display DAB information

Press **DISPLAY** repeatedly to cycle through the following information (if available).

- Dynamic label segment (DLS)
- Signal strength
- Program type (PTY)
- Ensemble name
- Frequency
- Signal error rate
- Bitrate codec
- DAB/DAB+
- Time
- Date

Use DAB menus

1 In DAB mode, press **MENU** to access the DAB menus.

2 Press **I◀◀ / ▶▶I** to toggle through the menus.

Re-scan for stations

Full scan is used to perform a wide range search for DAB radio stations.

Press **OK** to start scanning for available DAB stations.

↳ After the scanning is complete, the first detected station is broadcast.

Tune to a station manually

With this feature, you can tune to a specific channel/frequency manually. In addition to antenna orientation for better radio reception, the optimal reception can also be obtained with this feature.

1 Press **OK** to access the station list.

2 Press **I◀◀ / ▶▶I** to select a station from 5A to 13F.

3 Press **OK** to confirm the option.

Remove invalid stations

This option lists active stations and removes any stations that are in the list but have no service in your area. In front of the station name of an invalid station, a question mark (?) is displayed.

1 Press **OK** to access the sub-menus.

2 Press **I◀◀ / ▶▶I** to select an option.

- : Return to the previous menu.
- : Remove invalid stations from the station list.

3 Press **OK** to confirm the option.

System menus

1 Press **OK** to access system menus.

2 Press **I◀◀ / ▶▶I** to select a sub-menu.

- For details, refer to the section '**Use system menus**'.

9 Adjust sound

The following operations are applicable to all supported media.

Select a preset sound effect

- Press **SOUND** repeatedly to select a preset sound effect.
  - POWERFUL, BALANCED, WARM, BRIGHT, and CLEAR

Adjust volume level

- On the remote control, press **VOL +/-** repeatedly.
- On the main unit, press **VOL+/VOL-** repeatedly.

Mute sound

- Press **MUTE** to mute or restore the sound.

10 Other features

Use the alarm timer

This product can be used as an alarm clock. You can select the disc, iPod/iPhone/iPad library, FM radio station, DAB radio station, or .mp3 files stored on a USB storage device as alarm source.

Note

- Make sure that you have set the clock correctly.
- If the selected alarm source is unavailable, this product switches to FM mode automatically.

1. In normal standby mode, press and hold **SLEEP/TIMER**.
   ↳ The alarm time is displayed with the hour digits blinking.
   ↳ **TIMER** is displayed.
2. Press **+VOL -** or **I◀◀ / ▶▶I** repeatedly to set the hour, and then press **SLEEP/TIMER** to confirm.
   ↳ The minute digits blink.
3. Press **+VOL -** or **I◀◀ / ▶▶I** to set the minute, and then press **SLEEP/TIMER** to confirm.
   ↳ The alarm source name blinks.
4. Press **+VOL -** or **I◀◀ / ▶▶I** to select an alarm source.
5. Press **SLEEP/TIMER** to confirm.
   ↳ VOL **XX** (XX indicates the volume level of alarm) blinks.
6. Press **+VOL -** to set the alarm volume, and then press **SLEEP/TIMER** to confirm.

Deactivate/Re-activate the alarm timer

In standby mode, press **SLEEP/TIMER**.

↳ If **TIMER** disappears, the alarm timer is deactivated.

↳ If **TIMER** is displayed, the alarm timer is activated.

Stop an alarm

When an alarm rings, press ⏻ or **SLEEP/TIMER** to stop it.

Note

- If you do not stop an alarm, it keeps ringing for 30 minutes, and then the product automatically switches to normal standby mode.

Use the sleep timer

You can set a period of time after which the product automatically switches to normal standby mode.

In working mode, press **SLEEP/TIMER** repeatedly to select a preset period (120, 90, 60, 45, 30, or 15 minutes).

↳ When the sleep timer is activated, **SLEEP** is displayed.

- To deactivate the sleep timer, press **SLEEP/TIMER** repeatedly until SLP OFF is displayed.

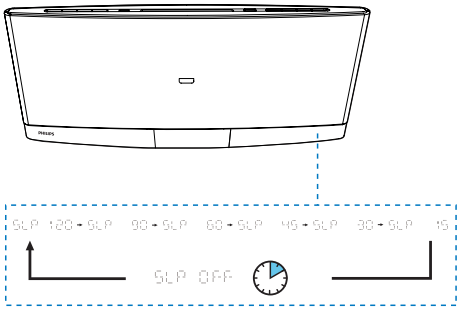

Listen to an external device

You can also listen to an external audio device, for example, MP3 player, through this product.

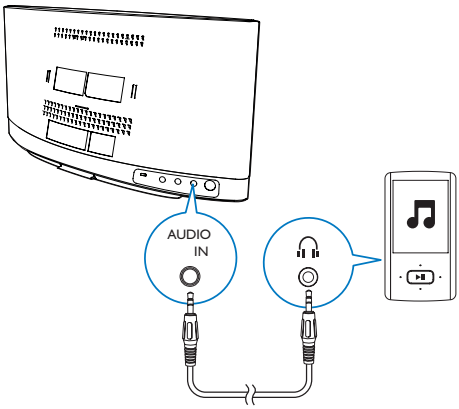

1. Press **AUDIO IN** or **SOURCE** to switch the source to AUDIO IN.
2. Connect an audio input cable with 3.5 mm plug on both ends between
   - the **AUDIO IN** socket on the back panel of this product, and
   - the headphone socket on the external device.
3. Play audio on the external device (refer to its user manual).

Listen through headphone

Plug a headphone into the 🎧 socket on the front panel of main unit.

Note

- No audio output from the headphone socket when you listen to the docked iPod/iPhone/iPad. Listen through the speakers instead.

Charge your USB device

You can charge your USB device, for example, smart phone, with this product.

Note

- The output voltage through the USB socket is 5 V with output currency 0.5 A.
- WOOX Innovations does not guarantee the compatibility with all USB devices.

Connect your USB device to this product with USB cable.

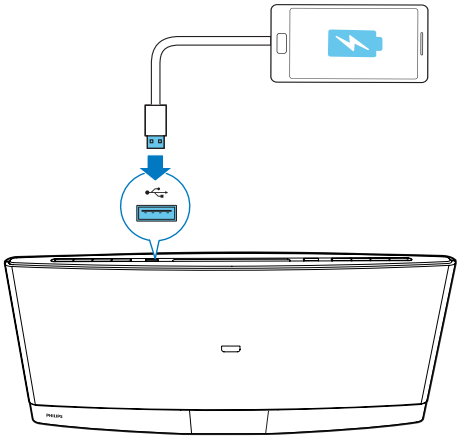

11 Use system menus

Use the system menus to

- check the version of current software of this product,
- upgrade the software, and
- reset the product to factory default status.

Check the current software version

SW VERSION

Press **OK** to display the version of current software.

Reset the product

FACTORY RESET

1 Press **OK** to display the options.

2 Press **I◀◀ / ▶▶I** to select an option.
   - N : Return to the previous menu.
   - Y : Reset the product to factory default status.

3 Press **OK** to confirm the option.

Upgrade the software

SOFTWARE UPGRADE

1 Go to www.philips.com/support.
2 Search for support information about this product with "**DCB3270/10**" as the keyword.
   ↪ When an upgrade packet is available, the link of "**Installation instructions**" under "**Software & drivers**" is accessible. The exact wording of link names may vary in different languages.
3 Click the link of "**Installation instructions**".
4 Read and understand the instructions on software upgrade.
5 Follow the instructions to complete the upgrade.

12 Product information

Note

- Product information is subject to change without prior notice.

Specifications

General information

AC power adaptor	Model: AS600-150-AD300 (Philips) Input: 100 - 240 V ~, 50/60 Hz, 1.5 A Output: 15 V ⎓ 3.0 A Safety standard: EN60065
Operation power consumption	25 W
Eco standby power consumption	≤ 0.5 W
USB Direct	Version 1.1, 2.0
Max. loading of USB output	5 V ⎓ 500 mA
Dimensions: Main unit (W x H x D)	520 x 223 x 101 mm
Weight - With packing - Main unit	 4.1 kg 2.7 kg

Amplifier

Maximum output power	2 X 20 W
Frequency response	60 Hz - 16 kHz
Signal-to-noise ratio	≥ 55 dBA
AUDIO INPUT	650 mV RMS 20 kOhm

Disc

Laser type	Semiconductor
Disc diameter	12 cm
Support discs	CD-DA, CD-R, CD-RW, MP3-CD
Audio DAC	24 Bits, 44.1 kHz
Total harmonic distortion	< 1.5% (1 kHz)
Frequency response	60 Hz - 16 kHz (44.1 kHz)
S/N Ratio	> 55 dB

Tuner

Tuning range	FM: 87.50 - 108.00 MHz; DAB: 174.928- 239.200 MHz
Tuning grid	50 kHz (FM)
Sensitivity	
- Mono, 26dB S/N Ratio	< 22 dBf
- Stereo, 46dB S/N Ratio	< 43 dBf
Search selectivity	> 28 dBf
Total harmonic distortion	< 3%
Signal-to-noise ratio	> 55 dB
Number of preset radio stations	FM (20), DAB (20)

Speakers

Speaker impedance	6 Ohm
Speaker driver	2.5" full range X 2
Sensitivity	> 82 dB/m/W

USB playability information

Compatible USB devices:

- USB flash memory (USB 2.0 or USB1.1)
- USB flash players (USB 2.0 or USB1.1)
- Memory cards (requires an additional card reader to work with this unit)

Supported formats:

- USB or memory file formats: FAT16, FAT32 (sector size: 512 bytes)
- MP3 bit rate (data rate): 32 - 320 kbps and variable bit rate
- Directory nesting up to a maximum of 8 levels
- Number of albums/ folders: maximum 999
- Number of tracks/titles: maximum 999
- ID3 tag v2.0 or later
- File name in Unicode UTF8 (maximum length: 128 bytes)

Unsupported formats:

- Empty albums: an empty album is an album that does not contain .mp3 files, and will not be shown in the display.
- Unsupported file formats are skipped. For example, Word documents (.doc) or MP3 files with extension .dlf are ignored and not played.
- AAC, WAV, PCM audio files

Supported MP3 disc formats

- ISO9660, Joliet
- Maximum track/file number: 999 (depending on file name length)
- Maximum album number: 99
- Supported sampling frequencies: 32 kHz, 44.1 kHz, 48 kHz
- Supported bitrates: 32-320 kbps, variable bitrates

Maintenance

Clean the cabinet

- Use a soft cloth slightly moistened with a mild detergent solution. Do not use a solution containing alcohol, spirits, ammonia or abrasives.

Clean discs

- When a disc becomes dirty, clean it with a cleaning cloth. Wipe the disc from the centre out.

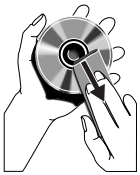

- Do not use solvents such as benzene, thinner, commercially available cleaners, or antistatic spray intended for analogue records.

Clean the disc lens

- After prolonged use, dirt or dust may accumulate at the disc lens. To ensure good play quality, clean the disc lens with Philips CD lens cleaner or any commercially available cleaner. Follow the instructions supplied with cleaner.

13 Troubleshooting

Warning

- Never remove the casing of this product.

To keep the warranty valid, never try to repair the product yourself.
If you encounter problems when using this device, check the following points before requesting service. If the problem remains unsolved, go to the Philips Web page (www.philips.com/support). When you contact the Consumer Care, make sure that the product is nearby and the model number and serial number are available.

Problem	Solution
No power.	Make sure that the AC power adaptor is connected properly.
	Make sure that there is power at the AC outlet.
	With a power-saving feature, the product switches off automatically 15 minutes after the product stays inactivity.
No sound or poor sound.	Adjust the volume.
	Disconnect the headphones.
No response from the product.	Reconnect the AC power adaptor, and then turn on the product again.
	With a power-saving feature, the product switches off automatically 15 minutes after the product stays inactivity.

Problem	Solution
Remote control does not work.	Before you press any function button, select the correct source with the remote control instead of the main unit.
	Reduce the distance between the remote control and the main unit.
	Insert the battery with its polarity (+/– signs) aligned as indicated.
	Replace the battery.
	Aim the remote control directly at the sensor on the front panel of the main unit.
No disc is detected.	Insert a disc.
	Make sure that you place the disc with its label facing upwards.
	Wait until the moisture condensation at the lens has cleared.
	Replace or clean the disc.
	Make sure that the recordable disc is finalized and the format supported.
USB storage device is not supported.	Make sure that the USB storage device is compatible with the product.
	Try another one.
Cannot play some files on the USB storage device.	Make sure that the file format is supported.
	Make sure that the file quantity does not exceed the maximum.
Radio reception is poor.	Increase the distance between the product and other electrical appliances.
	Fully extend the antenna.
	Connect an outdoor FM antenna instead.
Timer does not work.	Set the clock correctly.
	Activate the timer.
Clock/ timer setting is erased.	Power has been interrupted or the AC power adaptor has been disconnected.
	Reset the clock/timer.

14 Notice

Any changes or modifications made to this device that are not expressly approved by WOOX Innovations may void the user's authority to operate the equipment.

Compliance

CE

This product complies with the radio interference requirements of the European Community.

This apparatus includes this label:

Class II equipment symbol:

CLASS II apparatus with double insulation, and no protective earth provided.

Care of the environment

Your product is designed and manufactured with high quality materials and components, which can be recycled and reused.

When this crossed-out wheeled bin symbol is attached to a product it means that the product is covered by the European Directive 2002/96/EC.
Please inform yourself about the local separate collection system for electrical and electronic products.
Please act according to your local rules and do not dispose of your old products with your normal household waste. Correct disposal of your old product helps to prevent potential negative consequences for the environment and human health.

Your product contains batteries covered by the European Directive 2006/66/EC, which cannot be disposed with normal household waste.Please inform yourself about the local rules on separate collection of batteries because correct disposal helps to prevent negative consequences for the environmental and human health.

Environmental information
All unnecessary packaging has been omitted. We have tried to make the packaging easy to separate into three materials: cardboard (box), polystyrene foam (buffer) and polyethylene (bags, protective foam sheet.)
Your system consists of materials which can be recycled and reused if disassembled by a specialized company. Please observe the local regulations regarding the disposal of packaging materials, exhausted batteries and old equipment.

Trademark notice

"Made for iPod," "Made for iPhone," and "Made for iPad" mean that an electronic accessory has been designed to connect specifically to iPod, iPhone, or iPad, respectively, and has been certified by the developer to meet Apple performance standards. Apple is not responsible for the operation of this device or its compliance with safety and regulatory standards. Please note that the use of this accessory with iPod, iPhone, or iPad may affect wireless performance.
iPod and iPhone are trademarks of Apple Inc., registered in the U.S. and other countries. iPad is a trademark of Apple Inc.

Copyright

2013 © WOOX Innovations Limited. All rights reserved.
Philips and the Philips' Shield Emblem are registered trademarks of Koninklijke Philips N.V. and are used by WOOX Innovations Limited under license from Koninklijke Philips N.V."
Specifications are subject to change without notice. WOOX reserves the right to change products at any time without being obliged to adjust earlier supplies accordingly.

Specifications are subject to change without notice
2013 © WOOX Innovations Limited. All rights reserved.
This product was brought to the market by WOOX Innovations Limited or one of its affiliates, further referred to in this document as WOOX Innovations, and is the manufacturer of the product. WOOX Innovations is the warrantor in relation to the product with which this booklet was packaged. Philips and the Philips Shield Emblem are registered trademarks of Koninklijke Philips N.V.

DCB3270_10_UM_V1.0