Register your product and get support at

www.philips.com/welcome

HTS3571

HTS3578W

EN User manual

PHILIPS

WARRANTY

This APPARATUS IS covered under warranty against any defect arising out of faulty or defective material or workmanship for a period of 12 months from date of purchase.

Should a defect develop during the period of warranty, Philips Electronics India Limited undertakes to repair the apparatus free of charge through an Authorised Philips service Center. If the purchaser shifts his residence to other town, the warranty will be valid at the nearest Authorised Philips service Center.

This warranty is not valid in case:
1. The apparatus is not used according to this manual;
2. Defects are caused by improper or reckless use;
3. Any repair work are done by person other than Authorised Philips Service Center;
4. Any modification or alteration of any nature are made in the apparatus;
5. The serial number is tampered
6. This warranty form is not completed immediately after purchase.

Serial No.: _____
Bill No & Date of Purchase: _____
Purchaser's Name: _____
Location & Tel No: _____
Dealer's Name: _____
Location & Tel No: _____
Dealer's Stamp & Sign: _____

Maintenance Tips for your Home Theater System:

- Always keep a Disc loaded in your Home Theater System tray.
- Keep the home theater away from the dusty areas. Keep it covered with a dust cover.
- Clean your Home Theater System Lens after every 20 dıscs played.
  - Use the 2 brush Philips DVD Lens Cleaner SVC2520 for best results.
- Clean the CDs / VCD / DVD / MP3 CD before inserting in your Home Theater System.

"For unlimited listening pleasure use
Philips earphones / headphones". Over 20 models to choose from

---

Philips Electronics India Limited

For any sales or service related queries:
Visit us on web at www.philips.com/support or
Call us on Tel. No.: 1860-180-1111 (BSNL / MTNL)*
011-6600-1111 (GSM / WLL)*

* "standard call rates apply"

Contents

1 Important 4
Safety and important notice 4
Trademark notice 5

2 Your product 6
Feature highlights 6
Product overview 7

3 Connect 10
Place the product 10
Connect video cables 11
Connect speaker cables to speakers 12
Connect speaker to speaker stand 12
Connect speakers and subwoofer 13
Connect rear speakers to wireless receiver 14
Connect radio antenna 14
Connect audio cables/other devices 14
Connect power cord 16

4 Get started 17
Insert the remote control batteries 17
Find the correct viewing channel 17
Select menu display language 18
Turn on Progressive Scan 18
Change speaker settings 19
Use Philips EasyLink 20
Select a play source 21

5 Play 22
Play a disc 22
Play video 22
Play music 25
Play photo 26
Play from USB device 27
Play from portable media player 28
Play from radio 28

6 Advanced features 30
Create MP3 audio files 30

7 Adjust sound 31
Control the volume 31
Select surround sound 31
Select a preset sound 31
Adjust microphone volume level 32
Karaoke settings 32
Turn off vocal (cancel voice) 32

8 Adjust settings 33
General setup 33
Audio setup 35
Video setup 36
Preferences 38

9 Additional Information 40
Update software 40
Care 40

10 Specifications 41

11 Troubleshooting 43

12 Glossary 45

English

1 Important

Safety and important notice

Warning

- Risk of overheating! Never install the product in a confined space. Always leave a space of at least 4 inches around the product for ventilation. Ensure curtains or other objects never cover the ventilation slots on the product.
- Never place the product, remote control or batteries near naked flames or other heat sources, including direct sunlight.
- Only use this product indoors. Keep this product away from water, moisture and liquid-filled objects.
- Never place this product on other electrical equipment.
- Keep away from this product during lightning storms.
- Where the mains plug or an appliance coupler is used as the disconnect device, the disconnect device shall remain readily operable.
- Visible and invisible laser radiation when open. Avoid exposure to beam.

Recycle notice

This electronic equipment contains a large number of materials that can be recycled or reused if disassembled by a specialized company. If you are disposing of an old machine, please take it to a recycling center. Please observe the local regulations regarding disposal of packaging materials, exhausted batteries and old equipment.

Copyright

Be responsible
Respect copyrights

The making of unauthorized copies of copy-protected material, including computer programmes, files, broadcasts and sound recordings, may be an infringement of copyrights and constitute a criminal offence. This equipment should not be used for such purposes.

Macrovision copyright

This product incorporates copyright protection technology that is protected by method claims of certain U.S. patents and other intellectual property rights owned by Macrovision Corporation and other rights owners. Use of this copyright protection technology must be authorized by Macrovision Corporation, and is intended for home and other limited viewing uses only unless otherwise authorized by Macrovision Corporation. Reverse engineering or disassembly is prohibited.

About Progressive Scan

Consumers should note that not all high definition television sets are fully compatible with this product and may cause artifacts to be displayed in the picture. In case of 525 or 625 progressive scan picture problems, it is recommended that the user switch the connection to the 'standard definition' output. If there are questions regarding our TV set compatibility with this model 525p and 625p DVD player, please contact our customer service center.

Trademark notice

Manufactured under license from Dolby Laboratories. Dolby, Pro Logic and the double-D symbol are trademarks of Dolby Laboratories.

DivX, DivX Ultra Certified, and associated logos are trademarks of DivX, Inc. and are used under license.
Official DivX® Ultra Certified product.
Plays all versions of DivX ® video (including DivX ® 6) with enhanced playback of DivX® media files and the DivX® Media Format.
Plays DivX® video with menus, subtitles and audio tracks.

Manufactured under license under U.S. Patent #'s: 5,451,942; 5,956,674; 5,974,380; 5,978,762; 6,487,535 & other U.S. and worldwide patents issued & pending. DTS and DTS Digital Surround are registered trademarks and the DTS logos and Symbol are trademarks of DTS, Inc. © 1996-2008 DTS, Inc. All Rights Reserved.

ENERGY STAR and the ENERGY STAR mark are registered U.S. marks.

Windows Media and the Windows logo are trademarks, or registered trademarks of Microsoft Corporation in the United States and/or other countries.

HDMI, and HDMI logo and High-Definition Multimedia Interface are trademarks or registered trademarks of HDMI licensing LLC.

The USB-IF Logos are trademarks of Universal Serial Bus Implementers Forum, inc.

LASER RADIATION
DO NOT VIEW DIRECTLY
WITH OPTICAL INSTRUMENTS
CLASS 1M LASER PRODUCT

2 Your product

Congratulations on your purchase, and welcome to Philips! To fully benefit from the support that Philips offers, register your product at www.philips.com/welcome.

Feature highlights

Video upscaling to 1080p

Enjoy watching discs in the highest picture quality available for your HDTV. This product offers full high-definition video playback up to 1080p resolution that provides a highly detailed picture and increased sharpness that delivers a more true-to-life picture for an amazing viewing experience.

Philips EasyLink

Your product supports Philips EasyLink, which uses the HDMI CEC (Consumer Electronics Control) protocol. EasyLink-compliant devices that are connected through HDMI connectors can be controlled by a single remote control.

Note

- Philips does not guarantee 100% interoperability with all HDMI CEC devices.

Listen to rich uncompressed multi-channel surround sound

This Home Theater System supports 5.1 channels of uncompressed audio that delivers a real-to-life sound experience as if you are listening to it live.

Hi speed USB 2.0 Link and MP3 link

Simply plug your USB device into the USB jack to play your MP3/WMA/JPEG/DivX files; or plug your portable media player to the MP3 LINK jack to enjoy the music play in superb sound quality.

Sync the audio output with the video play

Synchronize audio and video by delaying the audio output if the video signal sent to the TV is slower than the audio streams.

Create MP3 files

Convert your favorite audio tracks from an audio CD into MP3 format. The created MP3 files are saved in your USB device.

Screen Fit

View the movie in full screen display on any TV.

Karaoke scoring function

Karaoke scoring gives a score and a comment for each performance. Have your singing performance scored for even more karaoke fun at home!

Region codes

You can play discs with the following region codes.

DVD region code	Countries
ALL 5	India

Product overview

Main unit

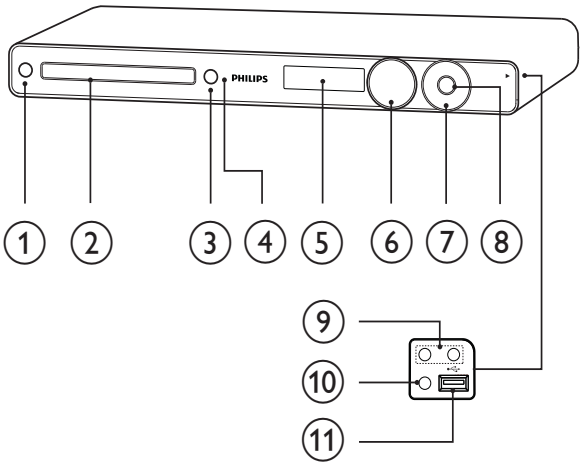

① ⏻ (Standby-On)
- Turns on the Home Theater System or switches to standby mode.

② Disc compartment

③ ⏏ (Open/Close)
- Opens or closes the disc compartment.

④ IR sensor
- Detects signals from the remote control. Point the remote control at the IR sensor.

⑤ Display panel
- Displays the current status or the disc information.

⑥ VOLUME
- Increases or decreases volume.

⑦ Play/Pause, Stop, Fast Backward / Fast Forward

- ▶❚❚ (Play/Pause)
- Starts, pauses or resumes disc play.
- In radio mode, automatically tune radio stations during first-time setup.

- ■ (Stop)
- Stops disc play.
- In radio mode, erases the current preset radio station.

- ⏮ / ⏭ (Fast Backward/Fast Forward)
- Skips to the previous or next title, chapter or track.
- Press and hold for fast backward or forward search.
- In radio mode, selects a preset radio channel.

⑧ SOURCE
- Selects a media to play or listen to audio from the connected device.

Note

- The following jacks are under the flap, at the right corner of the main unit (**OPEN▶**).

⑨ MIC 1 / MIC 2
- Connects a microphone.

⑩ MP3 LINK
- Connects a portable audio player

⑪ ⭠ (USB)
- Connects a USB supported device.

Remote Control

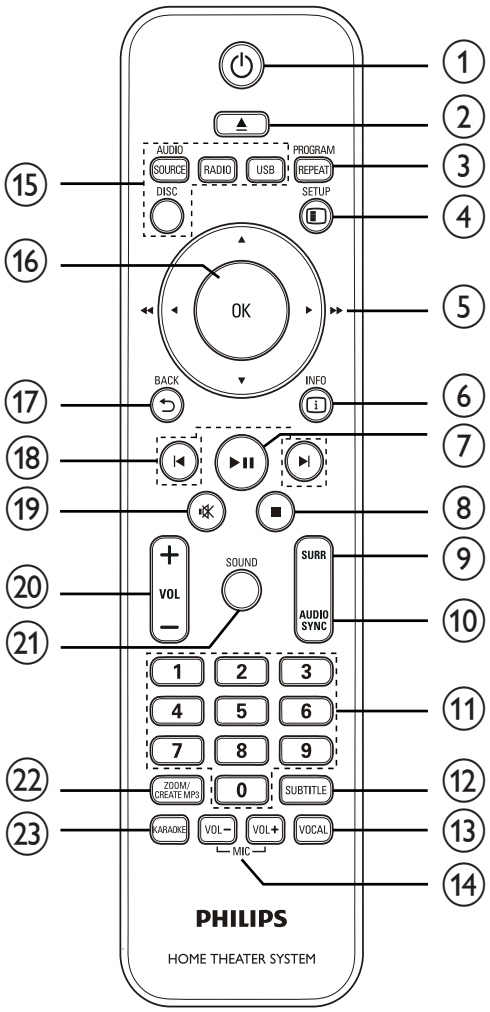

① ⏻ (Standby-On)
- Turns on the Home Theater System or switches to standby mode.
- When EasyLink is enabled, press and hold for at least three seconds to turn all connected HDMI CEC compliant devices to standby.

② ▲ (Open/Close)
- Opens or closes the disc compartment.

③ PROGRAM / REPEAT
- In radio mode, resets the list of preset stations: press to manually reset; press and hold to automatically reset.
- Selects or turns off repeat or shuffle mode.

④ SETUP
- Accesses or exits the setup menu.

⑤ ▲▼◀▶ (Navigation buttons)
- Navigates through the menus.
- Press left and right for fast backward or forward search.
- In radio mode, press up and down to tune the radio frequency.
- In radio mode, press left or right to start auto search.

⑥ INFO
- For discs, displays information about the current status or the disc.
- For slideshows, displays a thumbnail view of photo files.

⑦ ▶II (Play/Pause)
- Starts, pauses or resumes playback.
- In radio mode, automatically tune radio stations during first-time setup.

⑧ ■ (Stop)
- Stops play.
- In radio mode, erases the current preset radio station.

⑨ SURR (Surround Sound)
- Switches to supported surround sound or stereo sound.

⑩ AUDIO SYNC
- Selects an audio language or channel.
- Press and hold to access the setting for audio sync, then press **VOL +/-** to set the audio delay time.

⑪ Numeric buttons
- Selects an item to play.

⑫ SUBTITLE
- Selects a subtitle language for video.

⑬ VOCAL
- Changes the audio channel of a karaoke disc.

⑭ MIC (VOL +/-)
- Increases or decreases microphone volume.

⑮ Source buttons
- AUDIO SOURCE: Selects an audio input source.
- RADIO: Switches to FM radio.
- USB: Switches to the USB source.
- DISC: Switches to the disc source.

⑯ OK
- Confirms an entry or selection.

⑰ ⮌ BACK
- Returns to a previous screen.
- For DVD, goes to the title menu.
- For VCD version 2.0 or SVCD with PBC turned on, returns to the menu during playback.

⑱ ⏮ / ⏭ (Previous/Next)
- Skips to the previous or next title, chapter, or track.

⑲ 🔇 (Mute)
- Mutes or restores audio output.

⑳ VOL +/-
- Increases or decreases volume.

㉑ SOUND
- Selects a predefined sound effect.

㉒ ZOOM / CREATE MP3
- Zooms in or out of the picture.
- Accesses the menu to create MP3.

㉓ KARAOKE
- Accesses or exits the karaoke menu.

3 Connect

Make the following connections to use your Home Theater System.

Basic connections:
- Video
- Speakers and subwoofer
- Wireless receiver (For HTS3578W only)
- Power

Optional connections:
- Radio antenna
- Audio
  - Audio from TV
  - Audio from cable box/recorder/ game console
- Other devices
  - Portable media player
  - USB device

Note

- Refer to the type plate at the back or bottom of the product for identification and supply ratings.
- Before you make or change any connections, ensure that all devices are disconnected from the power outlet.

Tip

- Different types of connectors can be used to connect this product, depending on availability and your needs. A comprehensive interactive guide to help you connect your product is available at www.connectivityguide.philips.com.

Place the product

- Place the product where it cannot be pushed, pulled over or knocked down. Do not place it in an enclosed cabinet.
- Be sure that you have full access to the power cord for easy disconnection of the product from the power supply.

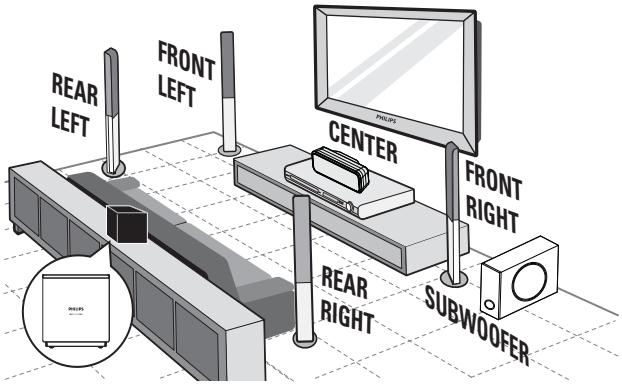

Wireless receiver is for HTS3578W only. Different set of speakers for HTS3571. (see 'Specifications' > 'Speakers').

1 Place the home theater near your TV.
2 Place the speaker system at your listening height and parallel to your listening area.
3 Place the subwoofer in the corner of the room or at least 1 meter/3 feet away from your TV.
4 Place the wireless receiver (for HTS3578W only) near to the power outlet and between the rear speakers. Position the wireless receiver (with Philips logo) parallel to the home theater.

Tip

- To reduce interference, place the home theater away from radiation devices.

Connect video cables

Connect this Home Theater System to TV to view disc play. Select the best video connection that the TV can support.

- Option 1: Connect to the HDMI jack (for a HDMI, DVI or HDCP-compliant TV).
- Option 2: Connect to the component video jacks (for a standard TV or Progressive Scan TV).
- Option 3: Connect to the video (CVBS) jack (for a standard TV).

Note

- You must connect this Home Theater System directly to a TV.

Option 1: Connect to the HDMI jack

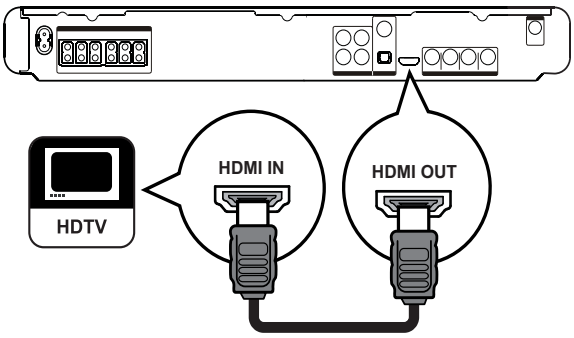

1 Connect an HDMI cable (not supplied) to the **HDMI OUT** jack on this Home Theater System and the HDMI input jack on the TV.

Note

- If your device supports HDMI CEC, you can control compliant devices with a single remote control. (see 'Get started' > 'Use Philips EasyLink').

Tip

- If the TV has a DVI connection only, connect via a HDMI/DVI adaptor. Connect an audio cable for sound output.
- You can optimize the video output. (see 'Adjust settings' > 'Video setup' > **[HDMI Setup]**).
- This type of connection provides the best picture quality.

Option 2: Connect to the component video jack

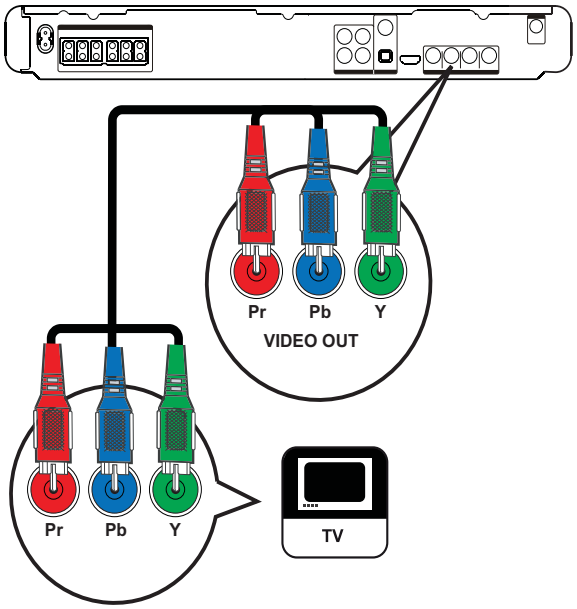

1 Connect the component video cable (not supplied) to the **Y Pb Pr** jacks on this Home Theater System and the COMPONENT VIDEO input jacks on the TV.
   - If a progressive scan TV is used, you may turn on the progressive scan mode. (see 'Get started' > 'Turn on Progressive Scan').

Note

- The component video input jack on the TV might be labeled as **Y Pb Pr**, **Y Cb Cr** or **YUV**.
- This type of connection provides good picture quality.

English

Option 3: Connect to the Video (CVBS) jack

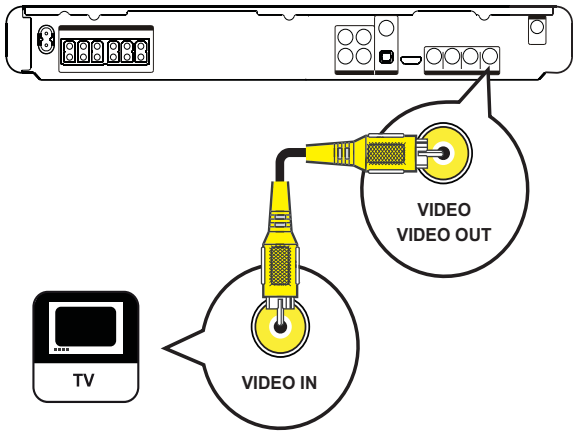

1 Connect a composite video cable to the **VIDEO** jack on this Home Theater System and the VIDEO input jack on the TV.

Note

- The video input jack on the TV might be labeled as A/V IN, VIDEO IN, COMPOSITE or BASEBAND.
- This type of connection provides standard picture quality.

Connect speaker cables to speakers

For HTS3578W only

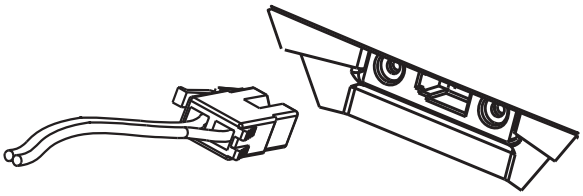

1 Connect the speaker cables to the matching color jacks on the speakers (or speaker stands).

Connect speaker to speaker stand

For HTS3578W only

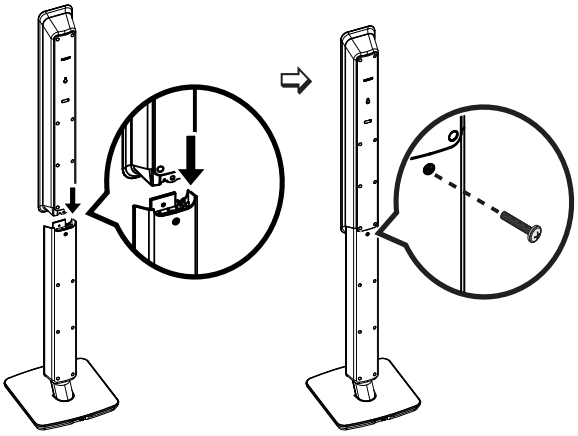

1 Attach the speakers to the speaker stands and secure the position with screws.

Connect speakers and subwoofer

For HTS3578W only

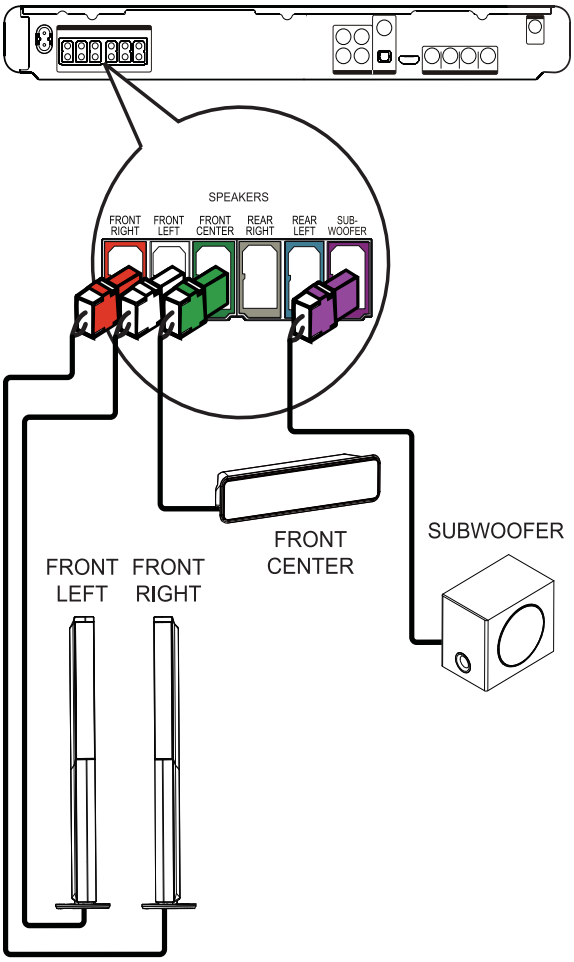

For HTS3571

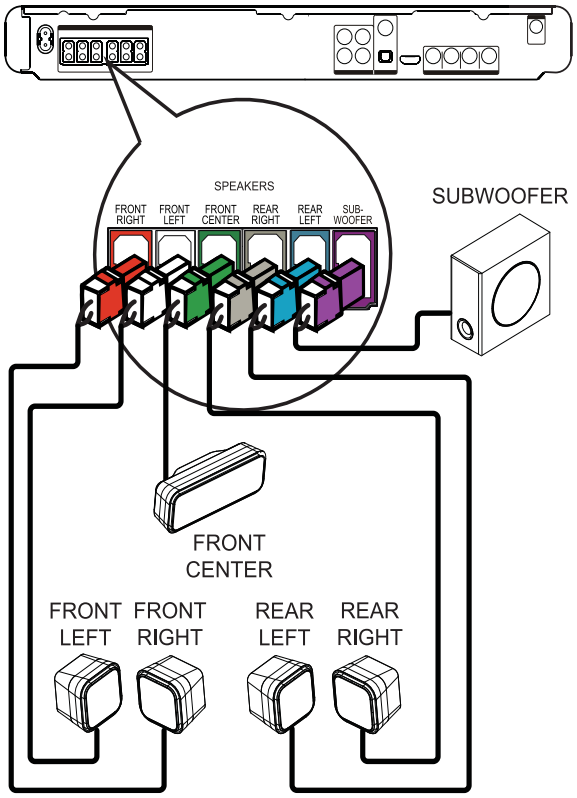

1 Connect the speakers and subwoofer to the matching jacks on this Home Theater System.

Note

- Ensure that the colors of the plugs and jacks are matched.

Connect rear speakers to wireless receiver

For the rear speakers of HTS3578W only

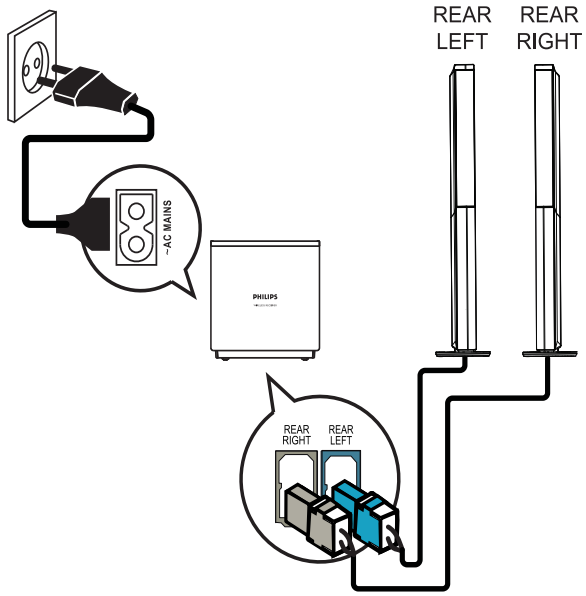

1 Connect the rear left and right speakers to the matching jacks at the bottom of the wireless receiver.

Connect radio antenna

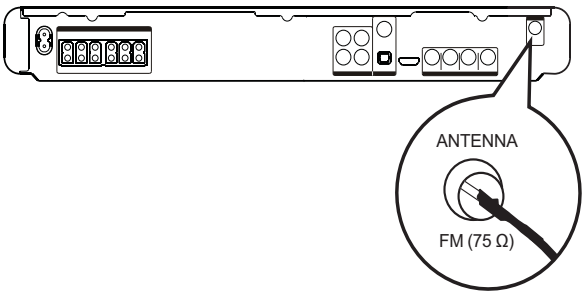

1 Connect the FM antenna to the **FM75 Ω** jack on this Home Theater System (for some models, this cable is already connected).

2 Extend the FM antenna and fix its ends to the wall.

Tip

- For better FM stereo reception, connect to an external FM antenna.

Connect audio cables/other devices

Route the audio from other devices to this Home Theater System to enjoy audio play with multi-channel surround capabilities.

Connect audio from TV

(also used for EasyLink control)

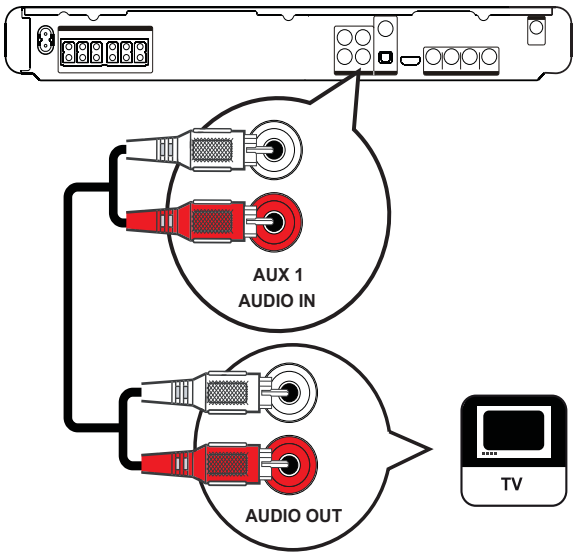

1 Connect the audio cables (not supplied) to the **AUDIO IN-AUX1** jacks on this Home Theater System and the AUDIO output jacks on the TV.

Note

- To listen to the audio output from this connection, press **AUDIO SOURCE** repeatedly until 'AUX1' is displayed on the display panel.

Connect audio from a cable box, recorder or games console

You can choose to connect to analog or digital jacks depending on the device capabilities.

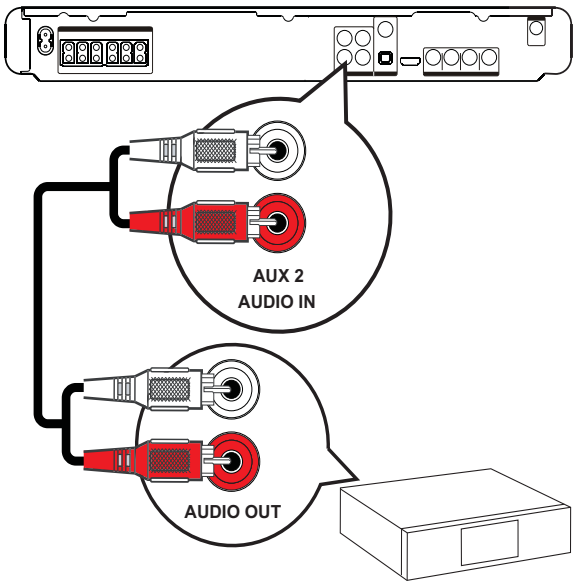

1 Connect the audio cables (not supplied) to the **AUDIO IN-AUX2** jacks on this Home Theater System and the AUDIO output jacks on the device.

Note

- To listen to the audio output from this connection, press **AUDIO SOURCE** repeatedly until 'AUX2' is displayed on the display panel.

Connect to coaxial jack

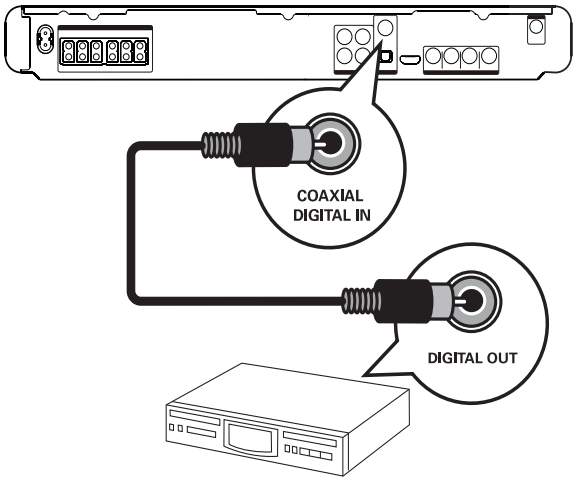

1 Connect a coaxial cable (not supplied) to the **DIGITAL-IN-COAXIAL** jack on this Home Theater System and the COAXIAL/DIGITAL output jack on the device.

Note

- To listen to the audio output from this connection, press **AUDIO SOURCE** repeatedly until 'COAX IN' is displayed on the display panel.

Connect to optical jack

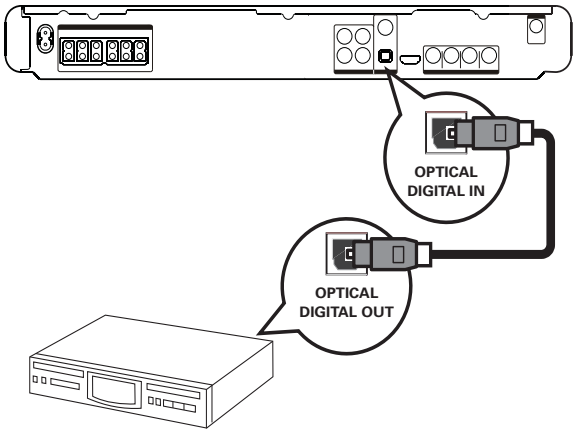

1 Connect an optical cable (not supplied) to the **DIGITAL-IN-OPTICAL** jack on this Home Theater System and the OPTICAL/SPDIF output jack on the device.

Note

- To listen to the audio output from this connection, press **AUDIO SOURCE** repeatedly until 'OPTI IN' is displayed on the display panel.

Connect portable media player

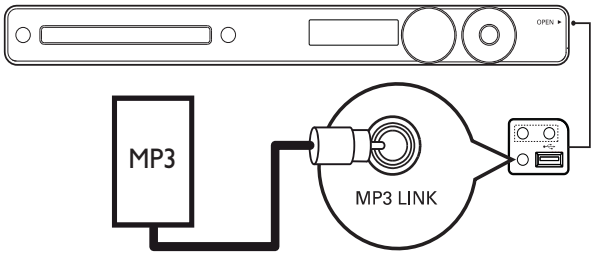

1 Connect a 3.5mm stereo audio cable (not supplied) to the **MP3 LINK** jack on this Home Theater System and the phone jack on the portable media player (such as MP3 player).

Note

- To listen to the audio output from this connection, press **AUDIO SOURCE** repeatedly until 'MP3 LINK' is displayed on the display panel.

Connect USB device

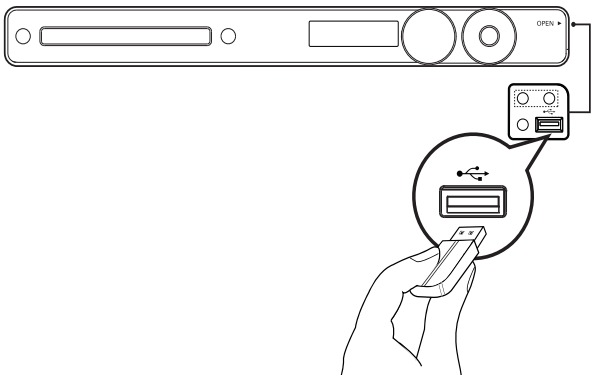

1 Connect the USB device to ⭠**USB** jack on this Home Theater System.

Note

- This Home Theater System can only play/view MP3, WMA, DivX (Ultra) or JPEG files that are stored on such devices.
- Press **USB** to access the content and play the files.

Connect power cord

Warning

- Risk of product damage! Ensure that the power supply voltage corresponds to the voltage printed on the back or the underside of the product.
- Before any connection to power outlet, set the voltage selector (at the rear or bottom of this Home Theater System to the local power line voltage.

1 Connect the power cords from the Home Theater System, wireless receiver and other devices to the power outlets when all the required connections are done.
   ↳ The wireless indicator on the wireless receiver light up. (Only applicable for HTS3578W)
   ↳ The Home Theater System is ready to be set up for use.

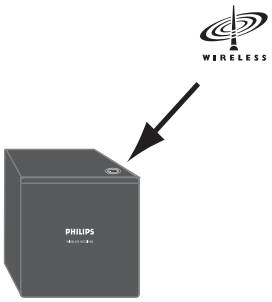

Note

- For optimum wireless reception, ensure that the wireless receiver is not obstructed by any objects.

4 Get started

Insert the remote control batteries

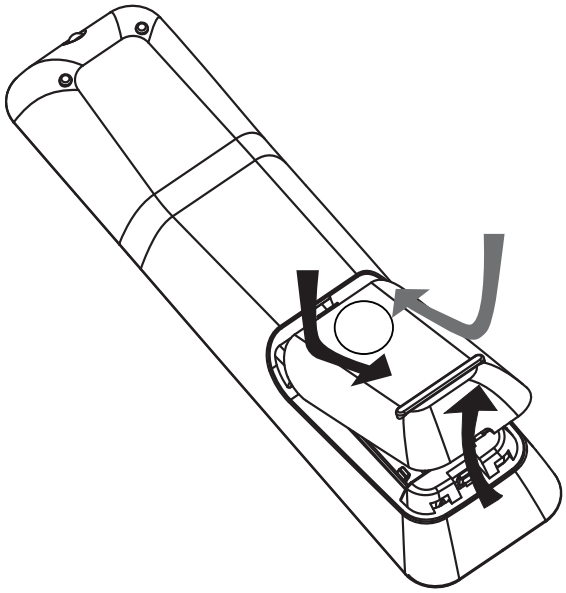

1 Slide the battery cover off the back of the remote control.

2 Insert the 2 supplied batteries (AAA). Be sure the + and - ends of the batteries line up with the markings inside the case.

3 Slide the cover back into position.

Note

- Do not mix batteries (old and new or carbon and alkaline, etc.).
- Remove batteries if they are exhausted or if the remote control is not to be used for a long time.
- Batteries contain chemical substances, they should be disposed of properly.

Control a play source

1 Press **RADIO**, **USB** or **DISC** button to select the source you wish to control.

2 Select the desired function (for example ⏮, ⏭).

Navigate through the menu

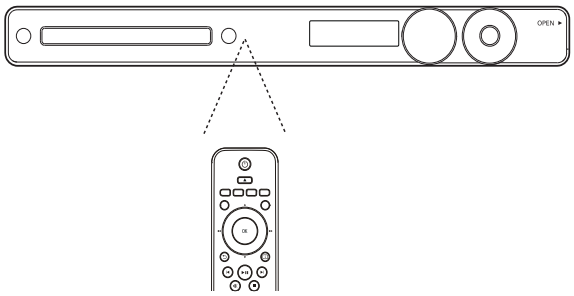

1 Point the remote control directly at the remote sensor on the Home Theater System and select the desired function.

2 Press the following buttons on the remote control to navigate through the on-screen menus.

Button	Action
▲▼	Move up or down
◀▶	Move left or right
OK	Confirm a selection
1 2 3 / 4 5 6 / 7 8 9 / 0	Enter numbers

Find the correct viewing channel

1 Press ⏻ to turn on this product.

2 Press **DISC** to switch to disc mode.

3 Turn on the TV and switch to the correct video-in channel in one of the following ways:

- Go to the lowest channel on your TV, then press the Channel Down button until you see the Philips screen.
- Press **SOURCE** button repeatedly on the remote control of your TV.

Tip

- The video-in channel is between the lowest and highest channels and may be called FRONT, A/V IN, VIDEO, HDMI etc. See the TV user manual on how to select the correct input on the TV.

Select menu display language

Note

- Skip this setting if this product is connected to a HDMI CEC compliant TV. It switches automatically to the same OSD menu language as per your TV setting.

General Setup	
EasyLink Setup	Auto
Disc Lock	English
Display Dim	中文 (简体)
OSD Language	中文 (繁體)
Screen Saver	Melayu
Sleep Timer	Русский
DivX(R) VOD Code	ไทย

1 Press **DISC**.

2 Press **SETUP**.
↳ **[General Setup]** menu is displayed.

3 Press ▶.

4 Press ▲▼ to select **[OSD Language]** in the menu, then press ▶.
- The language options are different depending on your country or region. It may not correspond to the illustration shown here.

5 Press ▲▼ to select a language, then press **OK**.

Tip

- You can set the default language for DVD disc menu (see 'Adjust settings' > 'Preferences' > **[Disc Menu]**).

Turn on Progressive Scan

If the TV supports progressive scan output, you can connect this Home Theater System and the TV using component video connection. (see 'Connect video cables' > 'Option 2: Connect to the component video jack').

Video Setup	
TV System	On
TV Display	Off
Screen Fit	
Picture Setting	
HDMI Setup	
Closed Caption	
Progressive	

1 Turn on the TV and ensure that the TV progressive scan mode is deactivated (see the TV user manual).

2 Switch the TV to the correct viewing channel for this Home Theater System.

3 Press **DISC**.

4 Press **SETUP**.

5 Press ▼ to select **[Video Setup]** in the menu, then press ▶.

6 Select **[Progressive]** > **[On]**, then press **OK**.
↳ A warning message is displayed.

7 To proceed, select **[Ok]** and press **OK**.
↳ The progressive setup is complete.

Note

- If a blank/distorted screen is displayed, wait for 15 seconds for the auto recover.
- If no picture displayed, turn off the progressive scan mode as follows: 1) Press ▲ to open the disc compartment. 2) Press ◄. 3) Press **AUDIO SYNC**.

8 Press **SETUP** to exit the menu.

9 You can now turn on the progressive scan mode on the TV.

Note

- If distorted picture is displayed, turn off the progressive scan feature on this product and TV.

Change speaker settings

Ideally, the distance between listening position and all the speakers should be the same. If not, change the speaker settings based on their distance from the listening position to obtain the best possible surround sound.

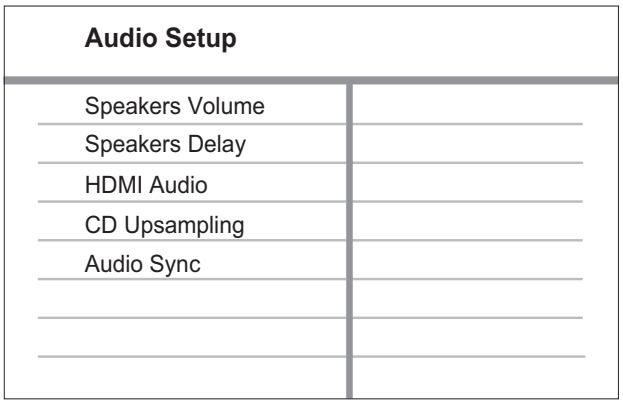

1 Press **DISC**.

2 Press **SETUP**.

3 Press ▼ to select **[Audio Setup]** in the menu, then press ►.
- If the speaker setup option is not accessible, press ■ twice before you press **SETUP**.

To set the speakers level

1 Select **[Speakers Volume]** in the menu, then press ►.

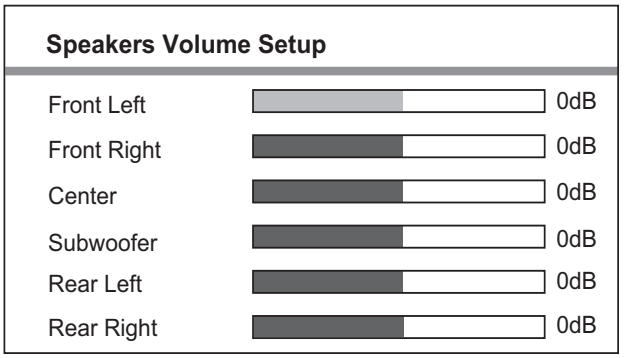

2 Press ◄► to change the volume level, then press **OK**.
↳ The test tone is emitted from the speaker.
- Repeat the above setting for other speakers until all the speakers output level sounds equally balance.
- To exit the menu, press **SETUP**.

To set the output delay time (center and rear speakers only)

1 Select **[Speakers Delay]** in the menu, then press ►.

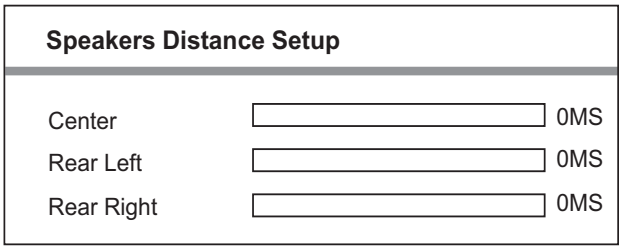

2 Press ◄► to set the delay time, then press **OK**.
- Repeat the above setting for other speakers until the sound output from different speakers reach the listening position at the same time.
- To exit the menu, press **SETUP**.

Tip

- Set a longer delay time if the center speaker or rear speaker is closer to the listening position than the front speaker.
- Allow 1ms setting for every 1 foot distance between the speaker and the listening position.

Use Philips EasyLink

Your product supports Philips EasyLink, which uses the HDMI CEC (Consumer Electronics Control) protocol. EasyLink-compliant devices that are connected through HDMI connectors can be controlled by a single remote control.

Note

- Philips does not guarantee 100% interoperability with all HDMI CEC devices.

1 Turn on the HDMI CEC operations on the TV and other connected devices. See TVs/devices manual for details.

2 You can now enjoy the following Philips EasyLink controls.

EasyLink
You can turn off or turn on all EasyLink features.

One-touch play
When you connect your product to devices that support one-touch play, you can control your product and the devices with one remote control. For example, when you press Play on your DVD remote control, your TV automatically switches to the correct channel to show the DVD content.
To enable One-touch play, a video disc must be placed in the disc compartment before operation.

One-touch standby
When you connect your product to devices that support one-touch standby, you can use your product remote control to switch your product and all connected HDMI devices to standby mode. You can perform one-touch standby using the remote control from any of the connected HDMI devices.

System audio control
When you connect your product to HDMI CEC compliant devices, your product can switch automatically to play audio from the connected device.
To use one-touch audio, you must map the audio input from the connected device to your product.
You can use the remote control from the connected device to adjust the volume.

Audio Input Mapping
When you map the audio input correctly, this Home Theater System switches to the audio from the played device automatically.

Map the devices to the audio inputs

Note

- Before you start, ensure that the audio output of the HDMI TV and other HDMI devices have been connected to the audio input jacks on this Home Theater System.

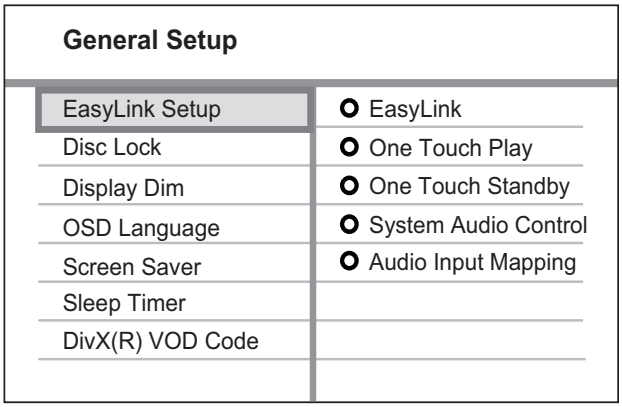

1 Press **DISC**.

2 Press **SETUP**.
↳ **[General Setup]** menu is displayed.

3 Press ▶.

4 Select **[EasyLink Setup]**, then press ▶.
- **[One Touch Play]** and **[One Touch Standby]** functions are turned on by default in the factory.

5 Select **[System Audio Control]** > **[On]**, then press **OK** to start scanning devices.
↳ Once complete, audio input mapping menu is displayed.

Audio Input Mapping	
Aux 1	[TV]
Aux 2	[DVD 3400]
Coaxial In	other (Non-HDMI)
Optical In	

For example, if the TV audio is connected to the **AUX1** jack on this Home Theater System, select **[Aux1]** and map with the TV (brand name) at the right panel.

6 Select the audio input of this Home Theater System that is used to connect to other HDMI device (e.g. AUX1, AUX2), then press ▶.

7 Select the correct connected device, then press **OK**.
↳ Repeat steps 5~7 to map other connected devices.

8 Press **SETUP** to exit the menu.

Select a play source

On the main unit

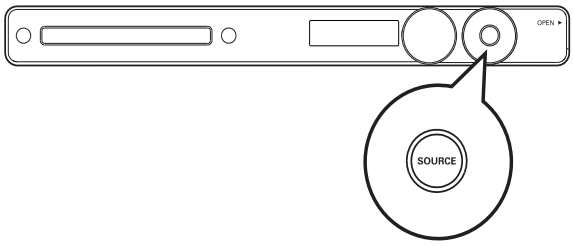

- Press **SOURCE** button repeatedly to select: **DISC** > **USB** > **FM** >**AUX 1** > **AUX 2** > **COAX IN**> **OPTI IN** > **MP3 LINK** > **DISC** ...

On the remote control

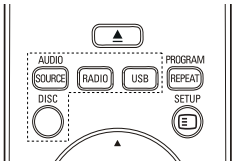

- Press **AUDIO SOURCE** repeatedly to switch to the connected audio source:

Display	Device connected to
AUX 1	AUDIO IN-AUX1 jacks
AUX 2	AUDIO IN-AUX2 jacks
COAX IN	DIGITAL IN-COAXIAL jack
OPTI IN	DIGITAL IN-OPTICAL jack
MP3 LINK	MP3 LINK jack

- Press **RADIO** to switch to FM band.
- Press **USB** to switch to USB mode.
- Press **DISC** to switch to disc mode.

5 Play

Play a disc

Caution

- Never place any objects other than discs into the disc compartment.
- Never touch the disc optical lens inside the disc compartment.

1 Press ▲ to open the disc compartment.

2 Insert a disc with its label facing up.
   - For double-sided disc, load the side to play faces up.

3 Press ▲ to close the disc compartment and start disc play.
   - To view disc play, turn on the TV to the correct viewing channel for this Home Theater System.
   - To stop disc play, press ■.

Note

- Check the types of discs supported. (see 'Specifications' > 'Playback media').
- If the password entry menu is displayed, enter the password before you can play the locked or restricted disc.
- If you pause or stop a disc for about 5 minutes, the screen saver activates. To deactivate the screen saver, press **DISC**.
- After you pause or stop a disc and no buttons are pressed within 15 minutes, this product automatically switches to standby mode.

Play video

Note

- For video disc, playback always resumes from the point where it was last stopped. To start play from the beginning, press ⏮ while the message is displayed.

Control video play

1 Play a title.

2 Use the remote control to control the title.

Button	Action
▶❚❚	Starts, pauses or resumes playback.
■	Stops play.
⏭	Skips to the next title or chapter.
⏮	Skips to the beginning of the current title or chapter. Press twice to jump to the previous title or chapter.
◀◀ / ▶▶	Searches fast-forward (right) or fast-backward (left). Press repeatedly to change the search speed. • In pause mode, slow motion backward or forward play.
▲ / ▼	Searches slow-forward (down) or slow-backward (up). Press repeatedly to change the search speed. • For VCD, only slow-forward play is possible.

Change video play

1 Play a title.

2 Use the remote control to change the video play.

Button	Action
AUDIO SYNC	Selects an audio language or channel.
SUBTITLE	Selects a subtitle language for video.
REPEAT	Selects or turns off repeat or shuffle mode. • Repeat options vary depending on the disc type. • For VCDs, repeat play is only possible if the PBC mode is turned off.
ZOOM	Zooms in or out of the picture. • To pan through the zoomed image, press the **Navigation buttons**.
ⓘ INFO	Displays the current status or the disc information. • You can change the video play options here without interrupting playback.

Note

- Some operations may not work with some discs. See the information accompanying the disc for details.

Access DVD menu

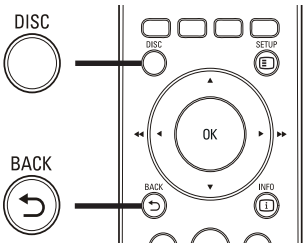

1 Press **DISC** to access disc main menu.

2 Select a play option, then press **OK**.

- In some menus, press the **Numeric buttons** to input your selection.
- To return to the title menu during play, press ⮌ **BACK**.

Access VCD menu or preview menu

The PBC (Playback Control) for VCD is activated by default in the factory. When you load in a VCD, the contents menu is displayed.

1 Press ▲▼ or the **Numeric buttons** to select a play option, then press **OK** to start play.
- If PBC is off, it skips the menu and starts play from the first title.
- To return to the menu during play, press ⮌ **BACK** (only possible if the PBC mode is on).

2 Press **DISC** to preview the contents of the disc.
- To exit the menu, press **DISC**.

Select Digest Type:

Track Digest
Disc Interval
Track Interval

3 Select a preview play option, then press **OK**

[Track Digest]
Plays the first few seconds of each track in a disc.

[Disc Interval]
Divides the total disc time by six and play the first few seconds of these intervals.

[Track Interval]
Divides the current track by six and play the first few seconds of these intervals.
This option is not available in stop mode.

Tip

- You can change the PBC setting (see 'Adjust settings' > 'Preferences' > **[PBC]**).

Sync audio output with video play

If the video play is slower than the audio output (sound does not match with the pictures), you can delay the audio output to match the video.

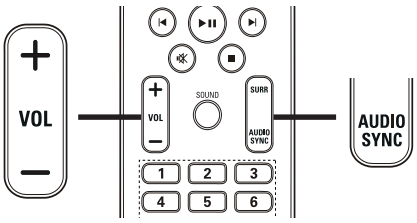

1 Press and hold **AUDIO SYNC** until 'AUDIO SYNC' is displayed.

2 Within five seconds, press **VOL +/-** to set the delay time for audio output.

Note

- If the volume control is not used within five seconds, it resumes normal volume control function.

Quick skip play to a specific time

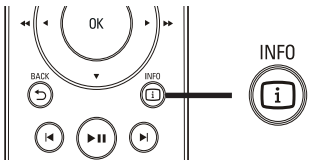

1 During play, press **INFO**.
↳ The disc status menu is displayed.

2 Press ▲▼ to view information, then press **OK**.
- **[TT Time]** (title time)
- **[Ch Time]** (chapter time)
- **[Disc Time]** (disc time)
- **[Track Time]** (track time)

3 Press the **Numeric buttons** to enter the time where you want to skip to, then press **OK**.

Note

- The options are different depending on the disc type.

Repeat play a specific section

1 During playback, press **INFO**.
↳ The disc status menu is displayed.

2 Select **[Repeat]** in the menu, then press ▶.

3 Move to **[Repeat AB]** in the menu, then press **OK** to set the starting point.

4 Press **OK** again to set the ending point.
↳ Repeat play starts.

5 To cancel repeat play, select **[Off]** and press **OK**.

Note

- The marked section for repeat play is only possible within a track/title.

View video play from different camera angles

1 During play, press **INFO**.
↳ The disc status menu is displayed.

2 Select **[Angle]**, then press ▶.

3 Press the **Numeric buttons** to select an angle option.
↳ Play changes to the selected angle.

Note

- Applicable only to discs contain multi-angle scenes.

Play DivX® video

DivX video is a digital media format that retains high quality despite a high rate of compression. You can enjoy DivX video on this DivX® Certified product.

1 Insert a disc or USB that contains the DivX videos.

2 Press **DISC** or **USB**.
↳ A contents menu is displayed.

3 Select a title to play, then press ▶II.

4 Use the remote control to control the title.

Button	Action
AUDIO SYNC	Selects an audio language or channel.
SUBTITLE	Selects a subtitle language for video.
■	Stops play. For DivX Ultra video, press this button again to display the contents menu.
ⓘ INFO	Displays DivX Ultra video information.

Note

- You can only play DivX videos that were rented or purchased with the DivX registration code of this Home Theater System (see 'Adjust settings' > 'General setup' > **[DivX(R) VOD Code]**) .
- You can play DivX video files of up to 4GB.
- If the subtitle does not appear correctly, change the character set (see 'Adjust settings' > 'Preferences' > **[DivX Subtitle]**).
- This Home Theater System can display up to 45 characters in the subtitle.

Play music

Control audio track play

1 Play a track.

2 Use the remote control to control the track.

Button	Action
▶II	Starts, pauses or resumes playback.
■	Stops play.
▶I	Skips to the next track.
I◀	Skips to the beginning of the current track. Press twice to jump to the previous track.
1 2 3 4 5 6 7 8 9 0	Selects an item to play.
◀◀ / ▶▶	Searches fast-forward (right) or fast-backward (left). Press repeatedly to change the search speed. • To change search speed, press this button repeatedly.
REPEAT	Selects or turns off repeat or shuffle mode.

Play MP3/WMA music

MP3/WMA is a type of highly compressed audio file (files with .mp3 or .wma extensions).

1 Insert a disc or USB that contains the MP3/WMA music.

2 Press **DISC** or **USB**.
↳ A contents menu is displayed.

3 Select a folder, then press **OK**.

4 Select a track to play, then press ▶II.
- To return to the main menu, press ⮌ BACK or press ▲ until 'Previous' folder is selected, then press OK.

Note

- For disc recorded in multiple sessions, only the first session is played.
- This product does not support MP3PRO audio format.
- If any special characters are present in the MP3 track name (ID3) or album name, it might not be displayed correctly on the screen because these characters are not supported.
- Some WMA files are protected by Digital Rights Management and cannot be played on this product.
- Folders/files that exceed the supported limit of this product will not be displayed or played.

Tip

- You can select the display of data contents, view folders or files (see 'Adjust settings' > 'Preferences' > **[MP3/JPEG Display]**).

Play photo

Play photo as slideshow

This product can play JPEG photos (files with .jpeg or .jpg extensions).

1 Insert a disc or USB that contains the JPEG photos.

2 Press **DISC** or **USB**.
↳ Slideshow begins (for Kodak disc) or a contents menu (for JPEG disc) is displayed.

3 Select the folder/album you want to play.
- To preview the photos in the folder/album, press ⓘ **INFO**.

- To go to previous or next screen display, press ⏮ / ⏭.
- To select a photo, press the **Navigation buttons**.
- To display the selected photo only, press **OK**.

4 Press ▶II to start slideshow play.
- To return to the menu, press ⮌ **BACK**.

Note

- You may require longer time to display the disc content on the TV due to the large number of songs/photos compiled onto one disc.
- If the JPEG photo is not recorded with an 'exif' type file, the actual thumbnail picture is not be shown on the display. It is replaced by a 'blue mountain' thumbnail picture.
- This product can only display digital camera pictures according to the JPEG-EXIF format, typically used by almost all digital cameras. It cannot display Motion JPEG and pictures in formats other than JPEG, or sound clips associated with pictures.
- Folders/files that exceed the supported limit of this product will not be displayed or played.

Control photo play

1 Play photo slideshow.

2 Use the remote control to control the photo.

Button	Action
◀	Skips to the previous photo.
▶	Skips to the next photo.
▲	Rotates the photo clockwise.
▼	Rotates the photo anti-clockwise.
ZOOM	Zooms in or out of the picture. Play pause in zoom mode.
■	Stops play.

Play musical slideshow

Play MP3/WMA music files and JPEG photo files simultaneously to create musical slideshow. The MP3/WMA and JPEG files must be stored on the same disc or USB device.

1 Play MP3/WMA music.

2 Navigate to the photo folder/album and press **OK** to start slideshow play.

↳ Slideshow begins and continues till the end of the photo folder or album.

↳ Audio continues to play till the end of the disc.

- To stop slideshow play, press ■.
- To stop music play, press ■ again.

Play from USB device

This product plays/views MP3, WMA, DivX (Ultra) or JPEG files on the following USB devices:

- digital camera that complies with the PTP standard
- flash drive
- memory card reader
- HDD (external power source needed)

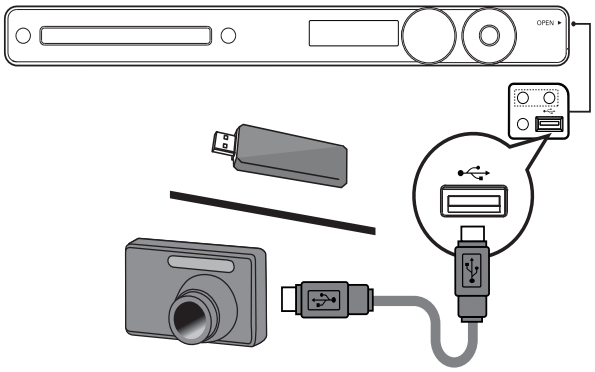

1 Connect a USB device to the ⭠ **(USB)** jack.

2 Press **USB**.

↳ A contents menu is displayed.

3 Select a file to play, then press ▶II.

↳ Play starts.

- To stop play, press ■ or remove the USB device.

Note

- If the device does not fit into the USB jack, connect it through a USB extension cable.
- If you connect a multiple USB card/device reader, only one card/device can be accessed.

Play from portable media player

Simply connect your portable media player (e.g. MP3 player) to this Home Theater System to enjoy superb sound quality from your music collections.

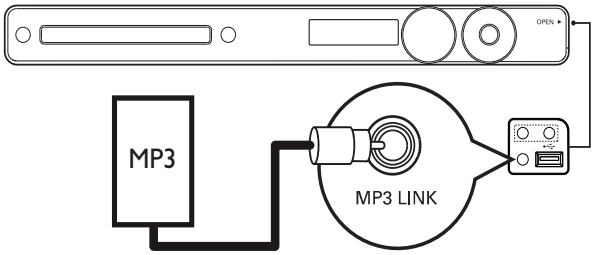

1 Connect a 3.5mm stereo audio cable (not supplied) from the **MP3 LINK** jack on this Home Theater System to the 'headphone' jack on the portable media player.

2 Press **AUDIO SOURCE** repeatedly until 'MP3 LINK' is displayed.

3 Start play on your portable media player.
- To stop play, press **STOP** on the portable media player.

Note

- Control playback is only possible on the portable media player.
- Stop play on the portable media player before you switch to other play media/source.

Play from radio

Check if the FM antenna has been connected to this Home Theater System. If not, connect the supplied FM antenna to the **FM75 Ω** jack and fix its ends to the wall.

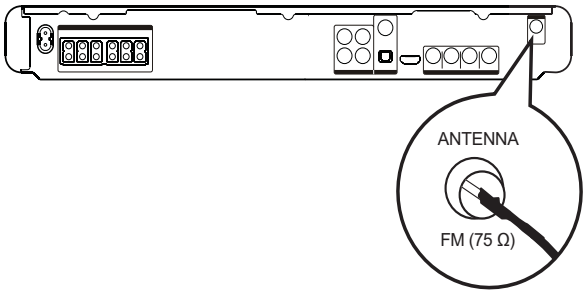

Tip

- For the best reception, place the antenna away from your TV or other sources of radiation.
- For even better reception of FM stereo, connect an external FM antenna (not supplied).

First time tuning

When you access to radio mode for the first time, follow the instruction to install the radio stations.

1 Press **RADIO**.
↳ 'AUTO INSTALL ... PRESS PLAY' is displayed.

2 Press **▶II**.
↳ All detected radio stations are stored.
↳ Once complete, it tunes to the first preset radio station.
- To stop auto tuning, press **■**.

Note

- This Home Theater System can store up to a maximum of 40 radio stations.
- If auto installation is not activated or less than 5 radio stations are stored, you will be prompted to install the radio stations again.

Listen to radio

1 Press **RADIO**.

2 Use the remote control to control the radio.

Button	Action
⏮⏭	Selects a preset radio station.
▲▼	Tunes the radio frequency up or down.
■	Press and hold this button to erase the current radio station from the preset list. • The preset number for other radio stations remain unchanged.

Reinstall all the radio stations

1 Press **RADIO**.

2 Press and hold **PROGRAM** for more than 5 seconds.

↳ All previously stored radio stations are replaced.

Note

- Check the radio antenna connection if no stereo signal is detected or less than 5 stations are detected during radio installation.

Search and store radio stations individually

1 Press **RADIO**.

2 Press ◀◀ / ▶▶.

↳ It starts searching until a radio station is detected.

3 Repeat step 2 until you tune to the radio station you wish to store.

- To finetune the radio frequency, press ▲ / ▼.

4 Press **PROGRAM**.

↳ The preset station number blinks.

↳ If no action is carried out within 20 seconds after the above step, it exits the preset mode.

5 Press ⏮ / ⏭ (or the **Numeric buttons**) to select a preset number to store.

6 Press **PROGRAM** to confirm.

Change tuning grid

In some countries, the frequency step between adjacent channels in FM band is 50 kHz or 100 kHz.

Note

- This feature only applicable for certain region.
- Change tuning grid erases all preset radio stations.

1 Press **RADIO**.

2 Press ■.

3 Press and hold ▶❚❚ until 'GRID 9' or 'GRID 10' is displayed.

↳ 'GRID 9' for 50 kHz and 'GRID 10' for 100 kHz.

6 Advanced features

Create MP3 audio files

You can convert audio CDs into MP3 audio files with this Home Theater System. The created MP3 audio files are saved in your USB device.

Option	Description
[Speed]	Selects the write-to-file speed. If **[Normal]** speed is selected, music play can be heard while creating the MP3 file.
[Bitrate]	Selects the quality level. Higher bitrate for better sound quality and bigger file size. Default setting is **[128kbps]**.

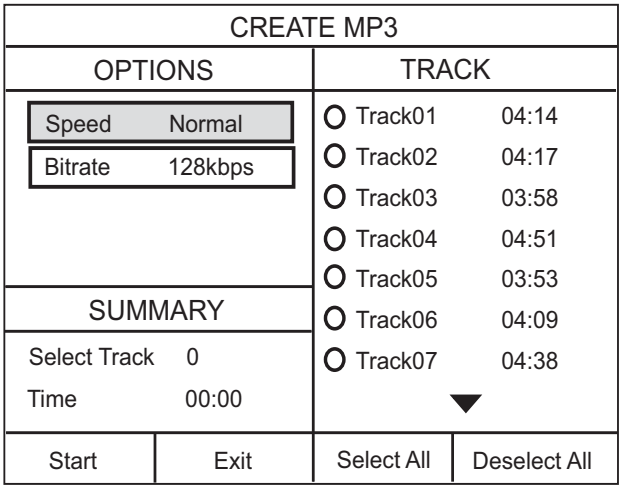

1 Insert an audio CD (CDDA/HDCD).

2 Connect the USB flash drive to ⭠ (USB) jack on this Home Theater System.

3 During disc play, press **CREATE MP3**.

4 Select the conversion options in the **[OPTIONS]** panel, then press **OK**.

5 Press ▶ to access the **[TRACK]** panel.

6 Select the audio track, then press **OK**.
- To select another track, repeat step 6.
- To select all tracks, select **[Select All]** in the menu and press **OK**.
- To deselect all tracks, select **[Deselect all]** in the menu and press **OK**.

7 Select **[Start]** in the menu to convert, then press **OK**.
↳ Once complete, a new folder is created automatically in the USB device to store all the new MP3 files.
- To exit the menu, select **[Exit]** and press **OK**.

Note

- While you convert, do not press any buttons.
- DTS CDs and copy-protected CDs cannot be converted.
- Write-protected or password-protected USB devices cannot be used to store MP3 files.

7 Adjust sound

Control the volume

1 Press **VOL +/-** to increase or decrease the volume.
- To mute, press 🔇.
- To restore the volume, press 🔇 again or press **VOL +**.

Select surround sound

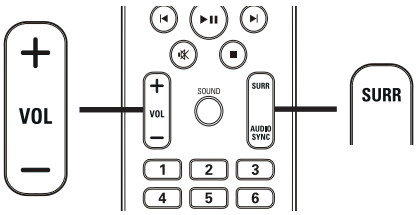

1 Press **SURR** repeatedly to select the best surround output that's available on the disc.

Option	Description
5 CH STEREO	Enhances the stereo channel output by duplicating the sound output to the center and rear speakers. Ideal for party music.
MULTI-CHANNEL/ DPLII	Multi-channel surround output: DTS (Digital Theater Systems), Dolby Digital, and Dolby Pro Logic II.
STEREO	Stereo sound from two front speakers.

Select a preset sound

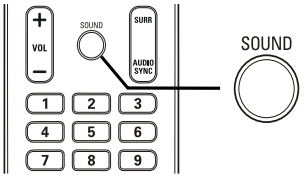

1 Press **SOUND** repeatedly to select the sound effect that most suitable for the video or music you play.

Video/Music	Description
ACTION / ROCK	Enhanced low and high range for great sounding movie effects and atmosphere. Great for action movies and rock/pop music.
CONCERT/ CLASSIC	Flat and pure sound mode. Ideal for listening to classical music and watching live concert disc.
DRAMA / JAZZ	Clear mid and high range. Recreates the atmosphere of a live club with the artist just in front of you. Good for jazz music and watching dramas.
SPORTS	Moderate mid range and surround effects for clear vocals and the atmosphere of a live sports venue. It is also ideal for video gaming.
NIGHT	Dynamically controlled sound mode suitable for watching movies at night or for nonintrusive background music.

Adjust microphone volume level

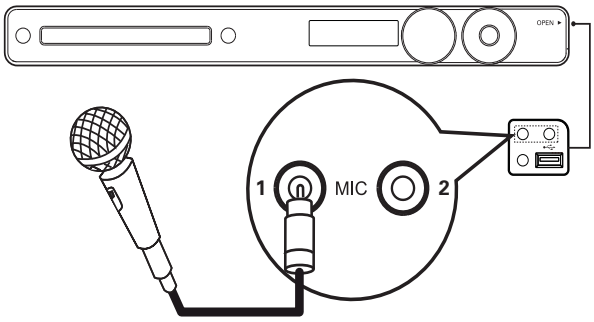

1 Connect a microphone (not supplied) to **MIC** jack on this Home Theater System.

2 Turn on the microphone output. (see 'Karaoke settings'.)

3 Press **MIC** (**VOL +/-**) to adjust the microphone volume.
   ↳ 'MIC XX' is displayed.
   - Sing or speak through the microphone to find the desired volume level.

Karaoke settings

1 Turn on the TV to the correct viewing channel for this Home Theater System.

2 Press **KARAOKE**.
   ↳ **[Karaoke Setup Page]** menu is displayed.

3 Select an option and change the setting, then press **OK**.
   - To exit the menu, press **KARAOKE**.

[Mic]
Turns on or off microphone output.
- **[On]** – Turns on microphone.
- **[Off]** – Turns off microphone.

[Echo Level]
Press ▲▼ to set the echo level.

[Key]
Press ▲▼ to set the pitch level that matches your voice.

[Score]
Selects a karaoke rating score level.
- **[Off]** – No score rating display.
- **[Basic]** – Basic rating.
- **[Intermediate]** – Intermediate rating.
- **[Advance]** – Advance rating.

Turn off vocal (cancel voice)

1 Press **VOCAL** repeatedly until 'VOICE CANCEL' is displayed.

Note
- You cannot cancel the voice output from MP3 or WMA audio.

8 Adjust settings

You can customize various kinds of settings as you prefer. Refer to the following instructions to navigate through the setup menus.

Symbol	Options
	[General Setup]
	[Audio Setup]
	[Video Setup]
	[Preferences]

Note

- If the setup option is grayed out, it means the setting cannot be changed at the current state.

General setup

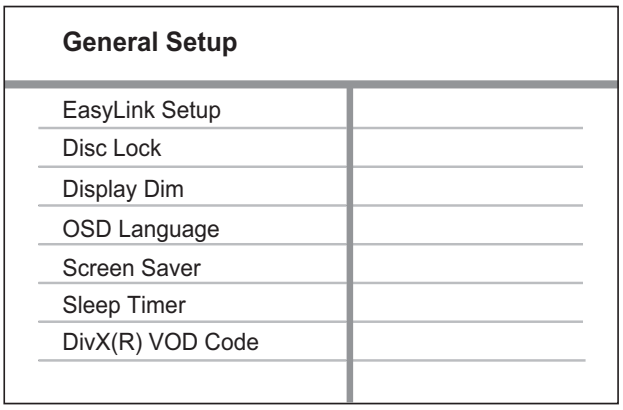

1 Press SETUP.
↳ **[General Setup]** menu is displayed.

2 Press ▶.

3 Select an option, then press **OK**.

4 Select a setting, then press **OK**.
- To return to the previous menu, press ⮌ **BACK**.
- To exit the menu, press **SETUP**.

Note

- See the explanations of the above options in the following pages.

[EasyLink Setup]
If this Home Theater System is connected to HDMI CEC compliant TV/devices, all connected devices can respond to the following commands simultaneously:

Option	Description
[EasyLink]	Turns off or on all EasyLink features. To disable this feature, select **[Off]**.
[One Touch Play]	When you press **PLAY**, the TV and Home Theater System are turned on. Disc play starts if there is a disc in the Home Theater System. To disable this feature, select **[Off]**.
[One Touch Standby]	When you press and hold **STANDBY** for at least three seconds, the Home Theater System and all the HDMI CEC devices switch to standby simultaneously. To disable this feature, select **[Off]**.
[System Audio Control]	When you play audio that is routed from the connected devices, this Home Theater System switches to the corresponding audio source automatically. To enable this feature, select **[On]**. Then proceed to **[Audio Input Mapping]** to scan and map all the connected devices.

Option	Description
[Audio Input Mapping]	When you map the audio input correctly, this Home Theater System switches to the audio from the played device automatically.

Note

- You must turn on the HDMI CEC operations on the TV/devices before you can enjoy the EasyLink controls. See the TV/devices manual for details.
- Philips does not guarantee 100% interoperability with all HDMI CEC compliant devices.

[Disc Lock]
Sets play restriction for a specific discs. Before you start, place the disc in the disc compartment (maximum 40 discs can be locked).

- **[Lock]** – Restricts access to the current disc. Once activated, a password is needed to unlock and play the disc.
- **[Unlock]** – Plays all discs.

Tip

- You can set or change the password (see 'Adjust settings' > 'Preferences' > **[Password]**).

[Display Dim]
Changes the brightness level of the display panel on this Home Theater System.

- **[100%]** – Normal brightness.
- **[70%]** – Medium brightness.
- **[40%]** – Dimmest display.

[OSD Language]
Selects the default on-screen menu language.

[Screen Saver]
Turns off or on the screen saver mode. Helps to protect the TV screen from being damaged due to over exposure to a static image for too long.

- **[On]** – Sets the screen saver to appear after 5 minutes of inactivity (for example, in pause or stop mode).
- **[Off]** – Disable screen saver mode.

[Sleep Timer]
Switches to standby automatically after the preset time.

- **[15 mins]**, **[30 mins]**, **[45 mins]**, **[60 mins]** – Selects the count down time before the Home Theater System switches to standby.
- **[Off]** – Disables sleep timer mode.

[DivX(R) VOD Code]
Displays the DivX® registration code.

Tip

- Enter this Home Theater System DivX registration code when you rent or purchase video from www.divx.com/vod. The DivX videos rented or purchased through the DivX® VOD (Video On Demand) service can be played only on the device to which it is registered.

Audio setup

Audio Setup	
Speakers Volume	
Speakers Delay	
HDMI Audio	
CD Upsampling	
Audio Sync	

1 Press SETUP.
↳ **[General Setup]** menu is displayed.

2 Press ▼ to select **[Audio Setup]**, then press ▶.

3 Select an option, then press **OK**.

4 Select a setting, then press **OK**.
- To return to the previous menu, press ⮌ **BACK**.
- To exit the menu, press **SETUP**.

Note

- See the explanations of the above options in the following pages.

[Speakers Volume]
Sets the volume level of each speaker to get the ideal audio balance.

1) To start, press **OK**.
2) Select a speaker in the menu, then press ◀▶ to adjust the volume level.
3) Press **OK** to confirm and exit.

Note

- The test tone is emitted from the speaker which you adjust.

[Speakers Delay]
Sets the delay time for the center and rear speakers if they are placed closer to the listening position, so that the sound output from all speakers reach the listening position at the same time.

1) To start, press **OK**.
2) Select a speaker in the menu, then press ◀▶ to set the delay time.
3) Press **OK** to confirm and exit.

Note

- Allow 1ms setting for every 1 foot distance between the speaker and the listening position.

[HDMI Audio]
Selects the HDMI audio setting when you connect this Home Theater System and the TV with a HDMI cable.
- **[On]** – Allows audio output through the TV and the speaker system. If the audio format on the disc is not supported, it will be downmixed to two-channel sound (linear-PCM).
- **[Off]** – Disables audio output from the TV. The sound is only output through the speaker system.

[CD Upsampling]
Converts the music CD to a higher sampling rate using sophisticated digital signal processing for better sound quality.
- **[Off]** – Disables CD-upsampling.
- **[88.2kHz (X2)]** – Converts the sampling rate of the CDs twice as high as the original rate.

Note

- CD upsampling is only available in stereo mode.

[Audio Sync]
Sets the default delay time for audio output when you play a video disc.

1) To start, press **OK**.
2) Select a speaker delay in the menu, then press ◀▶ to set the delay time.
3) Press **OK** to confirm and exit.

Video setup

Video Setup	
TV System	
TV Display	
Screen Fit	
Picture Setting	
HDMI Setup	
Closed Caption	
Progressive	

1 Press ⊟ **SETUP**.
↳ **[General Setup]** menu is displayed.

2 Press ▼ to select **[Video Setup]**, then press ▶.

3 Select an option, then press **OK**

4 Select a setting, then press **OK**.
- To return to the previous menu, press ⮌ **BACK**.
- To exit the menu, press ⊟ **SETUP**.

Note

- See the explanations of the above options in the following pages.

[TV System]
Changes this setting if the video does not appear correctly. By default, this setting matches the most common setting for TVs in your country.
- **[PAL]** – For PAL-system TV.
- **[NTSC]** – For NTSC-system TV.
- **[Multi]** – For TV that is compatible with both PAL and NTSC.

[TV Display]
Selects one of the following display formats:

4:3 Pan Scan (PS) 4:3 Letter Box (LB) 16:9 (Wide Screen)

- **[4:3 Pan Scan]** – For 4:3 screen TV: full-height display with the trimmed sides.
- **[4:3 Letter Box]** – For 4:3 screen TV: wide-screen display with black bars on the top and bottom of the screen.
- **[16:9 Wide Screen]** – For wide-screen TV: display ratio 16:9.

[Screen Fit]
Fits the picture format to the TV screen to enjoy watching disc play in full screen mode.
- **[Select]** – Displays various types of full screen format, press **OK** to select a suitable picture format that best fits to the TV screen.
- **[Off]** – Returns to normal screen display.

[Picture Setting]
Selects a predefined set of picture color settings or customize the personal setting.
- **[Standard]** – Original color setting.
- **[Bright]** – Vibrant color setting.
- **[Soft]** – Warm color setting.
- **[Personal]** – Customizes the color setting. Set the level of brightness, contrast, sharpness/tint and color saturation, then press **OK**.

[HDMI Setup]
Selects the HDMI video setting when you connect this Home Theater System and the TV with a HDMI cable.

- **[Wide Screen Format]** – Defines the wide screen format for disc play.

Option	Description
[Superwide]	Center position of the screen is stretched less than the side. Applicable only to 720p and above video resolution setting.
[4:3 Pillar Box]	No stretching of the picture. Black bars are displayed on both sides of the screen.
[Off]	Picture is displayed according to the format of the disc.

Note

- This setting is only available if you have set the **[TV Display]** setting to **[16:9 Wide Screen]**.

- **[HDMI Video]** – Selects the HDMI video output resolution that is compatible with your TV display capability.

Option	Description
[Auto]	Detects and selects the best supported video resolution automatically.
[480i], [576i], [480p], [576p],[720p], [1080i],[1080p]	Selects a video resolution that is best supported by the TV. See the TV manual for details.

Note

- If the setting is not compatible with your TV, a blank screen appears. Wait for 15 seconds for auto recover or switch to its default mode as follows: 1) Press ▲. 2) Press ◀. 3) Press **ZOOM**.

[Closed Caption]
Turns off or on display captions.

- **[On]** – Shows the sound effects in subtitles. Applicable only to discs with Closed Caption information included and the TV supports this feature.
- **[Off]** – Disables closed caption.

[Progressive]
If the TV supports progressive scan output, you can turn on the progressive scan mode to enhance the picture quality. Video connection through Component Video is required.

- **[On]** – Turns on progressive scan mode.
- **[Off]** – Disables progressive scan mode.

Tip

- There is more detailed description available (see 'Get started' > 'Turn on Progressive Scan').

Preferences

Note

- Stop disc play before you can access to **[Preferences]**.

Preferences	
Audio	
Subtitle	
Disc Menu	
Parental	
PBC	
MP3/JPEG Display	
Password	
DivX Subtitle ▼	

1 Press SETUP.
↳ **[General Setup]** menu is displayed.

2 Press ▼ to select **[Preferences]**, then press ▶.

3 Select an option, then press **OK**.

4 Select a setting, then press **OK**.
- To return to the previous menu, press BACK.
- To exit the menu, press SETUP.

Note

- See the explanations of the above options in the following pages.

[Audio]
Selects the default audio language for disc play.

[Subtitle]
Selects the default subtitle language for disc play.

[Disc Menu]
Selects the language for disc menu.

Note

- If the language you have set is not available on the disc, the disc uses its own default language.
- For some discs, the subtitle/audio language can only be changed from the disc menu.
- To select the languages that are not listed in the menu, select **[Others]**. Then check the Language Code list at the back of this user manual and enter the respective 4-digit language code.

[Parental]
Restricts access to discs that are unsuitable for children. These types of discs must be recorded with ratings.

1) Press **OK**.
2) Select a rating level, then press **OK**.
3) Press the **Numeric buttons** to enter the password.

Note

- Rated discs above the level you set in **[Parental]** require a password to be played.
- The ratings are country-dependent. To allow all discs to play, select '**8**'.
- Some discs have ratings printed on them but are not recorded with ratings. This function has no effect on such discs.

Tip

- You can set or change the password (see 'Preferences' > **[Password]**).

[PBC]
Turns off or on the content menu of VCDs/SVCDs with PBC (playback control) feature.
- **[On]** - Displays index menu when you load a disc for play.
- **[Off]** - Skips the menu and start play from the first title.

[MP3/JPEG Display]
Selects to display the folders or display all the files.

- **[View Folders]** – Displays the folders of MP3/WMA files.
- **[View Files]** – Displays all the files.

[Password]
Sets or changes the password for locked discs and play restricted DVDs.

Change Password	
Old Password	
New Password	
Confirm Password	
	OK

1) Press the **Numeric buttons** to enter '136900' or the last set password at **[Old Password]** field.
2) Enter the new password at **[New Password]** field.
3) Enter the new password again at **[Confirm Password]** field.
4) Press **OK** to exit the menu.

Note

- If you forget the password, enter '136900' before you set a new password.

[DivX Subtitle]
Selects a character set that supports the DivX subtitle.

[Standard]	English, Irish, Danish, Estonian, Finnish, French, German, Italian, Portuguese, Luxembourgish, Norwegian (Bokmål and Nynorsk), Spanish, Swedish, Turkish
[Central Europe]	Polish, Czech, Slovak, Albanian, Hungarian, Slovene, Croatian, Serbian (Latin script), Romanian
[Cyrillic]	Belarusian, Bulgarian, Ukrainian, Macedonian, Russian, Serbian
[Greek]	Greek
[Hebrew]	Hebrew
[Chinese(Simp)]	Simplified Chinese
[Korean]	Korean

Note

- Ensure that the subtitle file has the exact same file name as the movie file. If for example the file name of the movie is 'Movie.avi', then you will need to name the text file 'Movie.sub' or 'Movie.srt'.

[Version Info.]
Displays the software version of this Home Theater System.

Tip

- This information is required when you want to find out if a newest software version is available at the Philips website that you may download and install on this Home Theater System.

[Default]
Resets all the settings of this Home Theater System to factory default, except for **[Disc Lock]**, **[Password]** and **[Parental]** settings.

9 Additional Information

Update software

To check for new updates, compare the current software version of your Home Theater System with the latest software version (if available) at the Philips website.

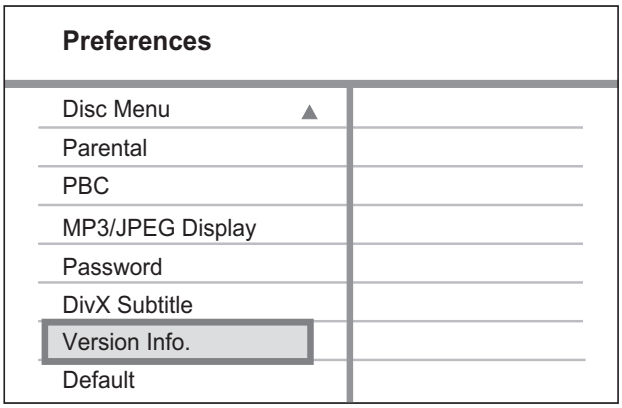

1 Press SETUP.

2 Select **[Preferences]** > **[Version Info.]**, then press **OK**.

3 Write down the version number, then press SETUP to exit the menu.

4 Go to www.philips.com/support to check the latest software version available for this Home Theater System.

5 If the latest software version is higher than the software version of this Home Theater System, download it and store onto a CD-R or USB flash drive.

6 Insert the CD-R or USB flash drive to this Home Theater System.

7 Press **DISC** or **USB**, then follow the instruction on the TV to confirm update operation.

↳ Once software update is complete, this Home Theater System turns off to standby automatically.

Note

- Do not remove the CD-R or USB when software updating is in progress.

8 Disconnect the power cord for a few seconds and connect again to reboot the system.

Care

Caution

- Never use solvents such as benzene, thinner, cleaners available commercially, or anti-static sprays intended for discs.

Clean discs

Wipe the disc with a micro fibre cleaning cloth from the centre to the edge in a straight line movement.

Clean main unit screen

Wipe the screen surface with a micro fibre cleaning cloth.

10 Specifications

Note

- Specification and design are subject to change without notice

Playback media
- DVD-Video, DVD+R/+RW, DVD-R/-RW, DVD+R DL, CD-R/CD-RW, Audio CD, Video CD/SVCD, Picture CD, MP3-CD, WMA-CD, DivX-CD, USB flash drive

Amplifier
- Total output power:
  - Home Theater mode: 1200 W (2 X 260 + 4 X 170)
- Frequency response: 40 Hz ~ 20 kHz
- Signal-to-noise ratio: > 60 dB (A-weighted)
- Input sensitivity:
  - AUX1: 400 mV
  - AUX2: 400 mV
  - MP3 LINK: 250 mV

Disc
- Laser Type: Semiconductor
- Disc diameter: 12cm / 8cm
- Video decoding: MPEG1/ MPEG2 / DivX / DivX Ultra
- Video DAC: 12 bits, 108 MHz
- Signal system: PAL / NTSC
- Video S/N: 56 dB
- Audio DAC: 24 bits / 96 kHz
- Frequency response:
  - 4 Hz - 20 kHz (44.1 kHz)
  - 4 Hz - 22 kHz (48 kHz)
  - 4 Hz - 44 kHz (96 kHz)
- PCM: IEC 60958
- Dolby Digital: IEC 60958, IEC 61937
- DTS: IEC 60958, IEC 61937

Radio
- Tuning range: FM 87.5-108 MHz (50/100 kHz)
- 26 dB quieting sensitivity: FM 22 dBf
- IF rejection ratio: FM 60 dB
- Signal-to-noise ratio: FM 50 dB
- Harmonic distortion: FM 3%
- Frequency response: FM 180 Hz~10 kHz / ±6dB
- Stereo separation: FM 26 dB (1 kHz)
- Stereo Threshold: FM 29 dB

USB
- Compatibility: Hi-Speed USB (2.0)
- Class support: UMS (USB Mass Storage Class)
- File system: FAT12, FAT16, FAT32

Main Unit
- Power supply: 110-127V/220-240V; ~50-60Hz
- Power consumption: 200 W
- Standby power consumption: < 1 W
- Dimensions (WxHxD):
  - For HTS3571: 435 x 57 x 365 (mm)
  - For HTS3578W: 435 x 57 x 375 (mm)
- Weight:
  - For HTS3571: 3.63 Kg
  - For HTS3578W: 3.69 Kg

Speakers

- System: full range satellite
- Speaker impedance:
  - Front/Rear: 4 Ohm
  - Center: 3 Ohm
- Speaker drivers:
  - Center: 2 X 2.5" woofer + 1 X 2" tweeter
  - Front/Rear: 3" full range
- Frequency response: 150 Hz ~ 20 kHz
- Dimensions (WxHxD):
  - For HTS3571
    - Center: 267 x 100 x 78 (mm)
    - Front/Rear: 100 x 100 x 75 (mm)
  - For HTS3578W:
    - Center: 440 x 105 x 75 (mm)
    - Front/Rear: 262 x 1199 x 264 (mm)
- Weight:
  - For HTS3571:
    - Center: 1.25 kg
    - Front: 0.48 kg
    - Rear: 0.45 kg
  - For HTS3578W:
    - Center: 1.43 kg
    - Front: 3.60 kg
    - Rear: 3.55 kg

Subwoofer

- Impedance: 3 ohm
- Speaker drivers: 203 mm (8") woofer
- Frequency response: 40 Hz ~ 150 Hz
- Dimensions (WxHxD): 242 x 352 x 360 (mm)
- Weight: 5.76 Kg

Wireless receiver (For HTS3578W only)

- Power Consumption: 50 W
- Frequency Response: 6000 Hz
- S/N Ratio: 60 dB (A-Weighted)
- Input Sensitivity: 400-600 mV
- Distortion: 1 %
- Dimensions (WxHxD): 126 x 130.5 x 126 (mm)
- Weight: 1.19 kg

Laser specification

- Type: Semiconductor laser GaAIAs (CD)
- Wave length: 645 - 665 nm (DVD), 770 - 800 nm (CD)
- Output power: 6 mW (DVD), 7 mW (VCD/CD)
- Beam divergence: 60 degrees.

11 Troubleshooting

Warning

- Risk of electric shock. Never remove the casing of the product.

To keep the warranty valid, never try to repair the product yourself.
If you have problems using this product, check the following points before you request service. If you still have a problem, register your product and get support at www.philips.com/welcome.

If you contact Philips, you will be asked for the model and serial number of your product. The model number and serial number are on the back or bottom of your product. Write the numbers here:
Model No. _____
Serial No. _____

Main unit

The buttons on this product do not work.

- Disconnect this product from the power outlet for a few minutes, then connect again.

Picture

No picture.

- See TVs manual for correct video input channel selection. Change the TV channel until you see the DVD screen.
- Press **DISC**.
- If you have changed the **[TV Display]** setting, switch back to default mode: 1) Press ▲ to open the disc compartment. 2) Press ◄. 3) Press **SUBTITLE**.

No picture on HDMI connection.

- Check if the HDMI cable is faulty. Replace a new HDMI cable.
- If this happens when you change the HDMI video resolution, you have to switch to its default mode: 1) Press ▲. 2) Press ◄. 3) Press **ZOOM**.

Sound

No sound.

- Make sure that the audio cables are connected and select the correct input source (for example, **AUDIO SOURCE**, **USB**) for the device you want to play.

No sound on HDMI connection.

- If the connected device is not HDCP-compliant or is only DVI-compatible, you cannot transmit sound through an HDMI connection. Use an analog or digital audio connection.
- Make sure that the **[HDMI Audio]** setting is turned on.

No sound from TV program.

- Connect an audio cable from the AUDIO input on this Home Theater System to the AUDIO output on your TV. Then press **AUDIO SOURCE** repeatedly to select the corresponding audio input source.

No surround sound effect from the speakers.

- Press **SURR** to select a correct surround sound setting.
- If the Home Theater System supports DTS playback, press **AUDIO SYNC** to select other audio track.
- Ensure that the source you are playing is recorded or broadcast in surround sound (Dolby Digital, etc). Sound cannot transmit through HDMI connection if the connected device is non-HDCP compliant or only DVI-compatible. Make an analog or digital audio connection.

Play

DivX video files cannot be played.

- Make sure that the DivX file is encoded according to the 'Home Theater Profile' with the DivX encoder.
- Make sure that the DivX video file is complete.

The aspect ratio of the screen is not aligned with the TV display setting.

- The aspect ratio is fixed on the disc.

DivX subtitle does not display correctly.

- Ensure that the subtitle file name is the same as the movie file name.
- Select the correct character set: 1) Press **SETUP**. 2) Select **[Preferences]**, then press ▶. 3) Select **[DivX Subtitle]**, then press **OK**. 4) Select the character set that supports the subtitle.

The contents of the USB flash drive cannot be read.

- The USB flash drive format is not compatible with this Home Theater System.
- Drive is formatted with different file system which is not supported by this unit (e.g. NTFS).
- Maximum size of memory supported is 160GB.

No sound from the rear speakers and the indicator on the wireless receiver blinks continuously for more than one minute. (For HTS3578W only)

- Ensure that all required connections are connected and do the following steps: 1) Press ▲. 2) Press **INFO**. A screen is displayed. 3) Press **1**, then press **SURR** button within 5 seconds. 'PAIRING SUCCESS' is displayed. 4) If 'PAIRING FAIL' is displayed, repeat steps 1 to 3.

12 Glossary

A

Aspect ratio
Aspect ratio refers to the length to height ratio of TV screens. The ratio of a standard TV is 4:3, while the ratio of a high-definition or wide TV is 16:9. The letter box allows you to enjoy a picture with a wider perspective on a standard 4:3 screen.

D

DivX®
The DivX® codec is a patent-pending, MPEG-4 based video compression technology developed by DivX®, Inc. It can shrink the file size of digital video and still maintain the high visual quality.

Dolby Digital
A surround sound system developed by Dolby Laboratories that contains up to six channels of digital audio (front left and right, surround left and right, center and subwoofer.)

H

HDCP
High-bandwidth Digital Content Protection. This is a specification that provides a secure transmission of digital contents between different devices (to prevent unauthorized copyright.)

HDMI
High-Definition Multimedia Interface (HDMI) is a high-speed digital interface that can transmit uncompressed high definition video and digital multichannel audio. It delivers high quality picture and sound quality, completely free from noise. HDMI is fully backward-compatible with DVI.
As required by the HDMI standard, connecting to HDMI or DVI products without HDCP (High-bandwidth Digital Content Protection) will result in no Video or Audio output.

J

JPEG
A very common digital still picture format. A still-picture data compression system proposed by the Joint Photographic Expert Group, which features small decrease in image quality in spite of its high compression ratio. Files are recognized by their file extension '.jpg' or '.jpeg.'

M

MP3
A file format with a sound data compression system. MP3 is the abbreviation of Motion Picture Experts Group 1 (or MPEG-1) Audio Layer 3. With the MP3 format, one CD-R or CD-RW can contain about 10 times more data than a regular CD.

MPEG
Motion Picture Experts Group. A collection of compression systems for digital audio and video.

P

PBC
Playback Control. A system where you navigate through a Video CD/Super VCD with on-screen menus that are recorded onto the disc. You can enjoy interactive playback and search.

PCM
Pulse Code Modulation. A digital audio encoding system.

Progressive scan
The progressive scan displays twice the number of frames per second than in an ordinary TV system. It offers higher picture resolution and quality.

W

WMA
Windows Media™ Audio. Refers to an audio compression technology developed by Microsoft Corporation. WMA data can be encoded with Windows Media player version 9 or Windows Media player for Windows XP. Files are recognized by their file extension '.wma.'

WMV
Windows Media Video. Refers to a video compression technology developed by Microsoft Corporation. WMV content can be encoded by using Windows Media® Encoder 9 series. Files are recognised by their file extension '.wmv'.