Always there to help you

Register your product and get support at
www.philips.com/support

Question? Contact Philips

AZ318

User manual

PHILIPS

Contents

1 Safety 1

2 Notice 2

3 Your CD Soundmachine 3
Introduction 3
What's in the box 3
Overview of the main unit 4

4 Get started 5
Connect power 5
Turn on 6
Turn off 6

5 Play 7
Play disc 7
Play from USB devices 7
Listen to FM radio 7
Play from an external device 8
Adjust volume 8
Turn Dynamic Bass Boost on/off 8

6 Play options 9
Control play 9
Program tracks 9

7 Product information 10
Specifications 10
Supported MP3 disc formats 11
USB playability informatio 11
Maintenance 11

8 Troubleshooting 12

1 Safety

This 'bolt of lightning' indicates uninsulated material within your unit may cause an electrical shock. For the safety of everyone in your household, please do not remove product covering.
The 'exclamation point' calls attention to features for which you should read the enclosed literature closely to prevent operating and maintenance problems.
WARNING: To reduce the risk of fire or electric shock, this apparatus should not be exposed to rain or moisture and objects filled with liquids, such as vases, should not be placed on this apparatus.
CAUTION: To prevent electric shock, match wide blade of plug to wide slot, fully insert.

Warning

- Never remove the casing of this apparatus.
- Never lubricate any part of this apparatus.
- Never look into the laser beam inside this apparatus.
- Never place this apparatus on other electrical equipment.
- Keep this apparatus away from direct sunlight, naked flames or heat.
- Ensure that you always have easy access to the power cord, plug or adaptor to disconnect the apparatus from the power.

- The device shall not exposed to dripping or splashing.
- Do no place any source of danger on the device (e.g. liquid filled objects. lit candles).
- Where the MAINS plug or an appliance coupler is used as the disconnect device, the disconnect device shall remain readily operable.
- Make sure that there is enough free space around the product for ventilation.
- Battery usage CAUTION – To prevent battery leakage which may result in bodily injury, property damage, or damage to the unit:
  - Install all batteries correctly, + and - as marked on the unit.
  - Batteries (packed or installed) shall not be exposed to excessive heat such as sunshine, fire or the like.
  - Remove batteries when the unit is not used for a long time.
- Only use attachments/accessories specified by the manufacturer.

Caution

- Use of controls or adjustments or performance of procedures other than herein may result in hazardous laser exposure or other unsafe operation.

2 Notice

Any changes or modifications made to this device that are not expressly approved by MMD Hong Kong Holding Limited may void the user's authority to operate the equipment.
Hereby, MMD Hong Kong Holding Limited declares that this product is in compliance with the essential requirements and other relevant provisions of Directive 2014/53/EU. You can find the Declaration of Conformity on www.philips.com/support.

Disposal of your old product

Your product is designed and manufactured with high quality materials and components, which can be recycled and reused.

This symbol on a product means that the product is covered by European Directive 2012/19/EU. Inform yourself about the local separate collection system for electrical and electronic products. Follow local rules and never dispose of the product with normal household waste. Correct disposal of old products helps prevent negative consequences for the environment and human health.

Environmental information

All unnecessary packaging has been omitted. We have tried to make the packaging easy to separate into three materials: cardboard (box), paper pulp (buffer) and polyethylene (bags, protective foam sheet.)
Your system consists of materials which can be recycled and reused if disassembled by a specialized company. Please observe the local regulations regarding the disposal of packaging materials, exhausted batteries and old equipment.

This apparatus includes these labels:

Class II equipment symbol

This symbol indicates that the apparatus has a double insulation system.

Note

- The type plate is located on the bottom of the apparatus.

3 Your CD Soundmachine

Introduction

With this unit, you can:

- Enjoy audio from discs, USB, and other external devices;
- Listen to FM radio stations

What's in the box

Check and identify the contents of the package:

- Main unit
- AC power cord
- Quick start guide & safety information
- Warranty leaflet

Overview of the main unit

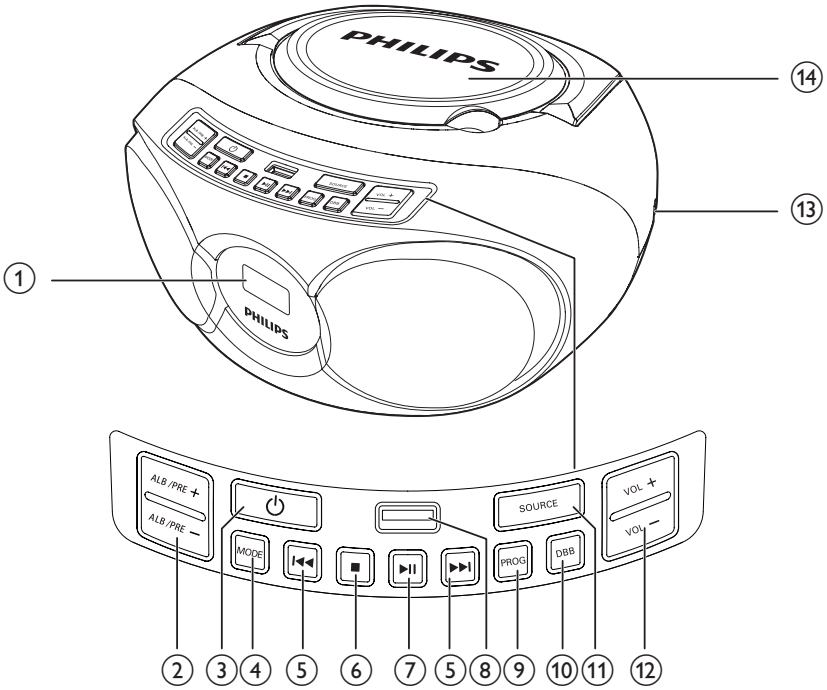

1. **Display panel**
2. **ALB/PRE-/ALB/PRE+**
   - Skip to the previous/next album.
   - Select a preset radio station.
3. **⏻**
   - Turn the CD sound machine on or off.
4. **MODE**
   - Select repeat or shuffle mode.
5. **⏮ / ⏭**
   - Skip to the previous or next track.
   - Search within a track.
6. **■**
   - Stop play.
   - Erase a program.
7. **▶II**
   - Start or pause play.
8. **⭠**
   - USB socket.
9. **PROG**
   - Program tracks.
   - Program radio stations.
10. **DBB**
    - Turn on or off dynamic bass enhancement.
11. **SOURCE**
    - Select a source.
12. **VOL -/VOL +**
    - Adjust volume.
13. **AUDIO-IN**
    - Connect an external audio device.
14. **Disc compartment**

4 Get started

Always follow the instructions in this chapter in sequence.
If you contact Philips, you will be asked for the model and serial number of this apparatus. The model number and serial number are on the bottom of the apparatus. Write the numbers here:
Model No. _____
Serial No. _____

Connect power

You can use either AC power or battery as power supply of this unit.

AC power

Warning

- Risk of product damage! Make sure that the power supply voltage corresponds to the voltage printed on the back or the underside of the unit.
- Risk of electric shock! When you disconnect the AC power, always pull the plug or adaptor from the socket. Never pull the cord.

Connect the AC power cord to:
- the **AC ~** socket on the unit.
- the wall outlet.

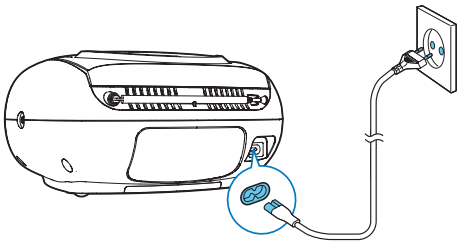

Battery power

Caution

- Risk of explosion! Keep batteries away from heat, sunshine or fire. Never discard batteries in fire.
- Batteries contain chemical substances, so they should be disposed of properly.

Note

- Batteries are not supplied with the accessories.

1 Open the battery compartment.
2 Insert 6 batteries (type: R14/ UM2/ C CELL) with correct polarity (+/-) as indicated.
3 Close the battery compartment.

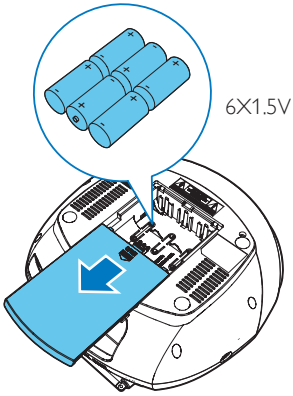

6X1.5V R14/UM2/C CELL

Turn on

Press ⏻ to turn on the CD sound machine.

Switch to standby mode

- The CD sound machine switches to standby mode automatically when there is no audio detected for over 15 minutes.
- The CD sound machine switches to standby mode automatically when playback is stopped in CD mode over 15 minutes.
- Press ⏻ or **SOURCE** to wake up the unit from standby mode.

Turn off

Press ⏻ again to turn off the CD sound machine.

5 Play

Play disc

1 Press **SOURCE** repeatedly to select the CD source.
2 Lift to open the disc compartment.
3 Insert a disc with the printed side facing up, then close the disc compartment.
4 Press ▶II to start play.
- To pause or resume play, press ▶II.
- To stop play, press ■.
- For MP3 tracks, press **ALB/PRE-/ALB/PRE+** to select an album.
- To select a track, press I◀◀ / ▶▶I.
- To search within a track, press and hold I◀◀ / ▶▶I, then release to resume normal play.

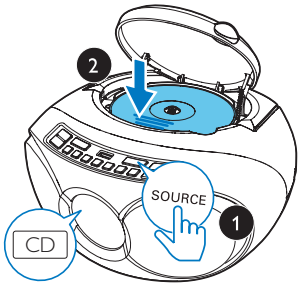

Play from USB devices

Note

- Make sure that the USB device contains playable audio content.

1 Press **SOURCE** repeatedly to select the USB source.
2 Insert the USB device into the ⇠ socket.
↳ Play starts automatically. If not, press ▶II.

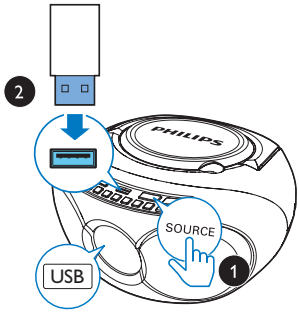

Listen to FM radio

Note

- osition the antenna as far as possible from TV, or other radiation source.
- For better reception, fully extend and adjust the position of the antenna.

1 Press **SOURCE** repeatedly to select the FM source..
2 Press I◀◀ / ▶▶I to tune to a radio station.
- Press and hold I◀◀ / ▶▶I for more than two seconds.

↳ The radio tunes to a station with strong reception automatically.

Store radio stations automatically

Note

- You can program a maximum of 20 FM/AM radio stations.

In tuner mode, press and hold **PROG** for 2 seconds.

↳ **[AUTO]** (auto) is displayed.

↳ The CD sound machine stores all the available FM/AM radio stations.

↳ The first stored radio station is broadcast automatically.

Program radio stations manually

1 Tune to a radio station.

2 Press **PROG** to activate program mode.
↳ **PXX** displays on the screen.(**XX** indicates number **01-20**)

3 Press **ALB/PRE-/ALB/PRE+** to allocate a number from 1–20 to this radio station, and then press **PROG** to confirm.
↳ The preset number and the frequency of the preset station are displayed.

4 Repeat steps 1-3 to program more stations.

Play from an external device

With this unit, you can also listen to an external audio device such as an MP3 player.

1 Press **SOURCE**repeatedly to select the audio source.
↳ **[AU]** display on the screen.

2 Connect the audio in cable (not supplied) to:
- the **AUDIO IN** socket on the CD sound machine.
- the headphone socket on an external device.

3 Play the external device (see the device's user manual).

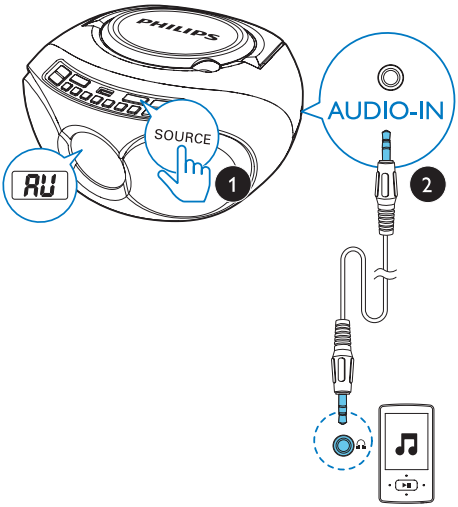

Note

- The **AUDIO IN** socket is not for headphones.

Adjust volume

During play, press **VOL -**/**VOL +** to adjust volume.

Turn Dynamic Bass Boost on/ off

Press **DBB** repeatedly to turn dynamic bass enhancement on or off.

6 Play options

Control play

In CD/USB mode, you can control play through the following operations.

⏮ / ⏭	Press and hold to fast-forward or fast-reverse the track during playback, then release to resume play.
ALB/ PRE-/ ALB/ PRE+	Skip to the previous or next MP3 album.
▶❚❚	Start or pause play.
■	Stop play.
MODE	**[REP]**: Play the current track repeatedly. **[REP ALL]**: Play all tracks repeatedly. **[REP ALB]**: Play all tracks in the album repeatedly. [**SHUF**]: Play tracks randomly. To return to normal play, press repeatedly until the repeat icons disappear.

Tip

- Only**[REP]** and **[REP ALL]** be selected when you play the programmed tracks.

Program tracks

You can program a maximum of 20 tracks.

1. Press ■ to stop playback.
2. Press **PROG** to activate the programming mode.
   ↳ **[P01]** is displayed.
3. For MP3 tracks, press **ALB/PRE-/ALB/ PRE+** to select an album.
4. Press ⏮ / ⏭ to select a track, and then press **PROG** to confirm.
5. Repeat steps 3 to 4 to program more tracks.
6. Press ▶❚❚ to play the programmed tracks.
   - To erase the program, when playback is stopped, press ■.

7 Product information

Note

- Product information is subject to change without prior notice.

Specifications

Amplifier

Rated Output Power	3W
Frequency Response	63 Hz - 20000 Hz, +/-3 dB
Signal to Noise Ratio	>72 dBA
Total Harmonic Distortion	<1 %
Audio In	600 mV RMS 20 kohm

Disc

Laser type	Semiconductor
Disc diameter	8/12 cm
Support discs	CD-DA, CD-R, CD-RW, MP3-CD
Audio DAC	24 Bits, 44.1 kHz
Total Harmonic Distortion	<1 %
Frequency Response	63Hz - 20000 Hz, +/-3 dB
S/N Ratio	>72 dBA

Tuner

Tuning Range	FM: 87.5 - 108 MHz
Tunning grid	50 KHz
Preset stations	20
Sensitivity - Mono, 26dB S/N Ratio -Stereo, 46dB S/N Ratio	 < 22dBf < 43 dBf
Search Selectivity	<28 dBf
Total Harmonic Distortion	<3%
Signal to Noise Ratio	>50 dB

General

Power supply - AC Power - Battery	 220 - 240 V ~, 50/60 Hz DC 9V, 6 x 1.5 V R14/ UM2/C Cell
Operation Power Consumption	<10 W
Standby Power Consumption	0.5 W
Dimensions - Main Unit (W x H x D)	 253 x 124 x 232 mm
Weight - Main Unit - With Packing	 1.08 kg 1.62 kg

Supported MP3 disc formats

- ISO9660, Joliet
- Maximum title number: 512 (depending on file name length)
- Maximum album number: 255
- Supported sampling frequencies: 32 kHz, 44.1kHz, 48 kHz
- Supported Bit-rates: 32~256 (kbps), variable bit rates

USB playability informatio

Compatible USB devices:

- USB flash memory (USB 2.0 or USB1.1)
- USB flash players (USB 2.0 or USB1.1)
- memory cards (requires an additional card reader to work with this apparatus)

Supported formats:

- USB or memory file format FAT16, FAT32 (sector size: 512 bytes)
- MP3 bit rate (data rate): 32-320 Kbps and variable bit rate
- Directory nesting up to a maximum of 8 levels
- Number of albums/ folders: maximum 99
- Number of tracks/titles: maximum 999
- File name in Unicode UTF8 (maximum length: 128 bytes)

Unsupported formats:

- Empty albums: an empty album is an album that does not contain MP3 files, and is not be shown in the display.
- Unsupported file formats are skipped. For example, Word documents (.doc) or MP3 files with extension .dlf are ignored and not played.
- AAC, WAV, PCM, WMA audio files

Maintenance

Clean the cabinet

- Use a soft cloth slightly moistened with a mild detergent solution. Do not use a solution containing alcohol, spirits, ammonia or abrasives.

Clean discs

- When a disc becomes dirty, clean it with a cleaning cloth. Wipe the disc from the centre out.

- Do not use solvents such as benzene, thinner, commercially available cleaners, or antistatic spray intended for analogue records.

Clean the disc lens

- After prolonged use, dirt or dust may accumulate at the disc lens. To ensure good play quality, clean the disc lens with Philips CD lens cleaner or any commercially available cleaner. Follow the instructions supplied with cleaner.

8 Troubleshooting

Warning

- Never remove the casing of this device.

To keep the warranty valid, never try to repair the system yourself.
If you encounter problems when using this device, check the following points before requesting service. If the problem remains unsolved, go to the Philips Web page (www.philips.com/support). When you contact Philips, make sure that the device is nearby and the model number and serial number are available.

No power

- Ensure that the Mains cord is connected securely.
- Ensure that there is power at the AC Mains.
- Ensure that the batteries are inserted correctly.

No sound or poor sound

- Adjust the volume.

No response from the unit

- Disconnect and reconnect the AC power plug, then turn on the system again.
- As a power-saving feature, the unit switches off automatically 15 minutes after track play reaches the end and no control is operated.

Poor cassette sound quality

- Ensure that heads in the cassette holder are clean.
- Ensure that a NORMAL (IECI) cassette tape is used for record.

No disc detected

- Insert a disc.
- Check if the disc is inserted upside down.
- Wait until the moisture condensation at the lens has cleared.
- Replace or clean the disc.
- Use a finalized CD or correct format disc.

Poor radio reception

- Increase the distance between the unit and your TV or other radiation sources.
- Fully extend the FM antenna.

2022 © MMD Hong Kong Holding Limited. All rights reserved. Specifications are subject to change without notice.
Philips and the Philips Shield Emblem are registered trademarks of Koninklijke Philips N.V. and are used under license. This product has been manufactured by and is sold under the responsibility of MMD Hong Kong Holding Limited or one of its affiliates, and MMD Hong Kong Holding Limited is the warrantor in relation to this product.

AZ318B/12_ UM_V1.0