Register your product and get support at
www.philips.com/welcome

Car Entertainment System

CE120

ENG User manual 3

Todos os desenhos/fotos deste manual apenas ilustrativos.
Todos los dibujos/fotos deste instructivo son ilustrativos.

PHILIPS

Contents

1 Important 4
Safety 4
Notice 4

2 Your Car Entertainment System 6
Introduction 6
What's in the box 6
Overview of the main unit 7
Overview of the remote control 8

3 Get started 10
Install the car audio 10
Install remote control battery 15
Turn on 15
Set clock 15

4 Listen to radio 16
Tune to a radio station 16
Store radio stations in memory 16
Tune to a preset station 16

5 Play from USB/SD/MMC device 17
Insert USB device 17
Insert SD/MMC card 17
Control play 18
Search for an MP3/WMA track 18
View play information 18
Repeat play 18
Random play 18
Intro play 19
Listen to other devices 19

6 Adjust sound 20
Adjust volume 20
Mute 20
Toggle Dynamic Bass Boost on/off 20
Select preset equalizer 20
Other sound settings 20

7 Adjust system settings 21
Select blackout setting 21
Turn demo mode on/off 21
Change button backlight color 21
Select start volume 21
Turn beep sound on/off 22
Turn display scroll on/off 22
Select shock-protect setting 22
Reset 22

8 Others 24
Detach the front panel 24
Remove the unit 24
Replace fuse 24

9 Product information 25

10 Troubleshooting 27

11 Glossary 28

1 Important

Safety

- Read and understand all instructions before you use your unit. If damage is caused by failure to follow instructions, the warranty does not apply.
- This unit is designed for negative ground (earth) 12 V DC operation only.
- To ensure safe driving, adjust the volume to a safe and comfortable level.
- Improper fuses can cause damage or fire. When you need to change the fuse, consult a professional.
- Use only the supplied mounting hardware for a safe and secure installation.
- To avoid short circuit, do not expose the unit, remote control or remote control batteries to rain or water.
- Never insert objects into the ventilation slots or other openings on the unit.
- Clean the unit and frame with a soft, damp cloth. Never use substances such as alcohol, chemicals or household cleaners on the unit.
- Never place any objects other than discs into the unit.
- Never use solvents such as benzene, thinner, cleaners available commercially, or anti-static sprays intended for discs.
- Visible and invisible laser radiation when open. Avoid exposure to beam.
- Risk of damage to the unit screen! Never touch, push, rub or strike the screen with any object.

Notice

Be responsible
Respect copyrights

The making of unauthorized copies of copy-protected material, including computer programs, files, broadcasts and sound recordings, may be an infringement of copyrights and constitute a criminal offence. This equipment should not be used for such purposes.

Recycling

Your product is designed and manufactured with high quality materials and components, which can be recycled and reused.
When you see the crossed-out wheel bin symbol attached to a product, it means the product is covered by the European Directive 2002/96/EC:

Never dispose of your product with other household waste. Please inform yourself about the local rules on the separate collection of electrical and electronic products. The correct disposal of your old product helps prevent potentially negative consequences on the environment and human health.
Your product contains batteries covered by the European Directive 2006/66/EC, which cannot be disposed of with normal household waste. Please inform yourself about the local rules on separate collection of batteries. The correct disposal of batteries helps prevent potentially negative consequences on the environment and human health.

CE

This product complies with the radio interference requirements of the European Community.
This product complies with the requirements of the following directives and guidelines:
<2004/108/EC + 2006/95/EC>

Environmental information

All unnecessary packaging has been omitted. We have tried to make the packaging easy to separate into three materials: cardboard (box), polystyrene foam (buffer) and polyethylene (bags, protective foam sheet.)
Your system consists of materials which can be recycled and reused if disassembled by a specialized company. Please observe the local regulations regarding the disposal of packaging materials, exhausted batteries and old equipment.
Any changes or modifications made to this device that are not expressly approved by Philips Consumer Lifestyle may void the user's authority to operate the equipment.
2008 © Koninklijke Philips Electronics N.V. All rights reserved.
Specifications are subject to change without notice. Trademarks are the property of Koninklijke Philips Electronics N.V. or their respective owners. Philips reserves the right to change products at any time without being obliged to adjust earlier supplies accordingly.

2 Your Car Entertainment System

Congratulations on your purchase, and welcome to Philips! To fully benefit from the support that Philips offers, register your product at www.Philips.com/welcome.

Introduction

With the in-car audio system, you can enjoy your drive while you listen to:

- FM or AM (MW) radio
- Audio from a USB drive
- Audio from a SD/MMC card
- Audio from external devices

What's in the box

Check and identify the contents of your package:

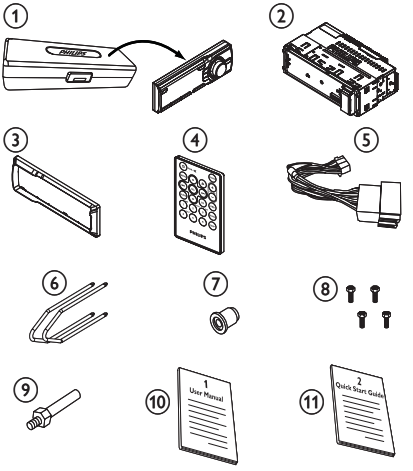

1. Carry case with front panel stored inside
2. In-car audio system
3. Trim plate
4. Remote control
5. Standard connector
6. Disassembly tool x 2 pcs
7. Rubber cushion
8. Screw x 4 pcs
9. Mounting bolt
10. User manual
11. Quick Start Guide

Overview of the main unit

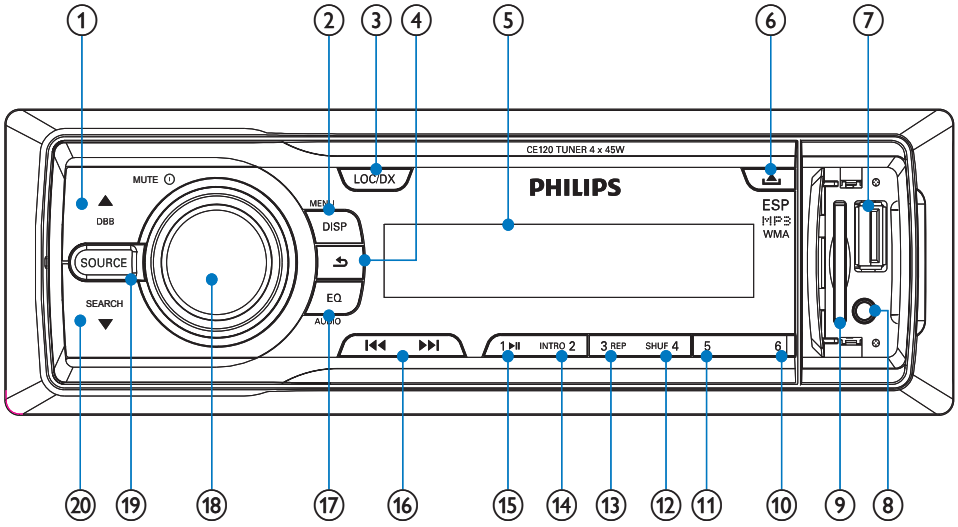

① ▲DBB
- Select radio band.
- Select MP3/WMA folder.
- Turn on or off Dynamic Bass Boost (DBB) sound.

② MENU/DISP
- Display radio frequency and clock.
- Display track, elapsed time, artist, album, title, folder, file and clock.
- Access system menu.

③ LOC/DX
- Select radio sensitivity.

④ ⮌
- Return to previous menu.
- Stop searching.
- Disable screen blackout.

⑤ Display panel

⑥ ⏏
- Unlock the front panel.

⑦ USB socket

⑧ External equipment socket

⑨ SD/MMC card slot

⑩ 6
- Select preset station no. 6.

⑪ 5
- Select preset station no. 5.

⑫ SHUF, 4
- Select random play mode.
- Select preset station no. 4

⑬ 3, REP
- Select repeat play mode.
- Select preset station no. 3

⑭ INTRO, 2
- Turn intro play on or off.
- Select preset station no. 2

⑮ 1, ▶❚❚
- Start play
- Pause or resume play.
- Select preset station no. 1

⑯ ⏮ /⏭
- Tune for radio station
- Skip/search for MP3/WMA track.

⑰ EQ/AUDIO
- Select equalizer (EQ) setting.
- Access audio setting menu.

⑱ MUTE⏻
- Turn the unit on or off.
- Turn mute on or off.
- Adjust volume.
- Confirm selection.
- Select characters inMP3/WMA search mode

⑲ SOURCE
- Select connected device.

⑳ ▼SEARCH
- Select radio band.
- Store radio station automatically.
- Select MP3/WMA folder.
- Search for MP3/WMA track or folder

Overview of the remote control

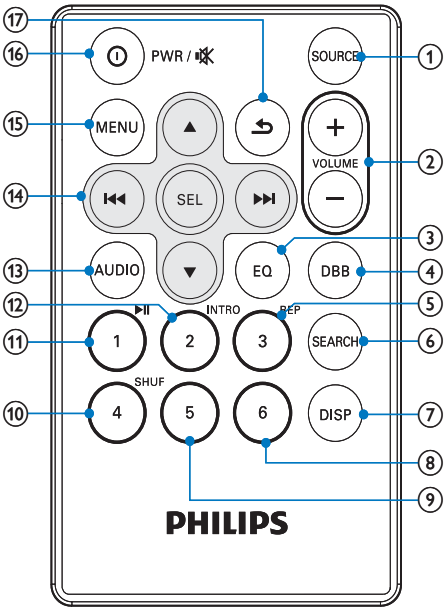

① SOURCE
- Select audio source.

② VOLUME +/-
- Adjust volume.

③ EQ
- Select EQ setting.

④ DBB
- Turn on or off Dynamic Bass Boost (DBB) sound.

⑤ 3, REP
- Select repeat play mode.
- Select preset station no. 3.

⑥ SEARCH
- Store radio stations automatically.
- Search a track or folder.

⑦ DISP
- Display radio frequency and clock.
- Display track, elapsed time, artist, album, title, folder, file and clock.

⑧ 6
- Select preset station no. 6.

⑨ 5
- Select preset station no. 5.

⑩ SHUF, 4
- Select random play mode.
- Select preset station no. 4.

⑪ 1, ▶II
- Start play.
- Pause or resume play.
- Select preset station no. 1.

⑫ INTRO, 2
- Turn intro play on or off.
- Select preset station no. 2.

⑬ AUDIO
- Access audio setting menu.

⑭ Navigation buttons
- - ⏮/⏭
  Tune for radio station
  Skip/search for MP3/WMA track.
- - ▲/▼
  Select radio band.
  Select MP3/WMA folder.
- - SEL
  Confirm selection.

⑮ MENU
- Access system menu.

⑯ ⏻PWR, 🔇
- Turn the unit on or off.
- Mute or unmute volume.

⑰ ⮌
- Return to previous menu.
- Disable screen blackout.

3 Get started

Caution

- Use the controls only as stated in this user manual.

Always follow the instructions in this chapter in sequence.
If you contact Philips, you will be asked for the model and serial number of your unit. The model number and serial number are on the back or side of your unit. Write the numbers here:
Model No. _____
Serial No. _____

Install the car audio

These instructions are for a typical installation. However, if your car has different requirements, make the corresponding adjustment. If you have any questions regarding installation kits, consult your Philips car audio dealer.

Caution

- This unit is designed for negative ground (earth) 12 V DC operation only.
- Always install this unit in the car dashboard. Other locations can be dangerous as the rear of the unit heats up during use.
- To avoid short-circuit: before you connect, ensure that the ignition is off.
- Ensure that you connect the yellow and red power supply leads after all other leads are connected.
- Ensure that all loose leads are insulated with electrical tape.
- Ensure that the leads do not get caught under screws orin parts that will move (e.g. seat rail).
- Ensure that all ground (earth) leads are run to a common ground (earth) point.
- Use only the supplied mounting hardware for a safe and secure installation.
- Improper fuses can cause damage or fire. When you need to change the fuse, consult a professional.

Note on the power supply lead (yellow)

- When you connect other devices to this unit, ensure that the rating of the car circuit is higher than the total fuse value of all the connected devices.

Notes on speaker connection

- Never connect speaker wires to the metal body or chassis of the car.
- Never connect speaker wires with stripes to one another.

Overview of parts

These are the supplied parts needed to connect and install this unit.

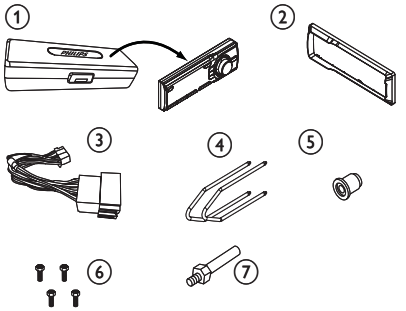

1. Carry case with front panel stored inside
2. Trim plate
3. Standard connector
4. Disassembly tool x 2 pcs
5. Rubber cushion
6. Screw x 4 pcs
7. Mounting bolt

Connect wires: ISO connectors

Caution

- Ensure that all loose leads are insulated with electrical tape.

1 Pull out the ISO connectors from car dashboard and connect them to the bigger end of the supplied standard connector.

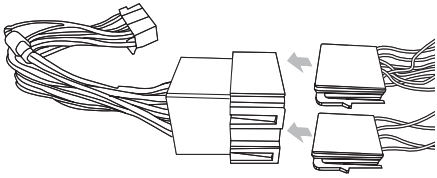

2 Connect the other end of the supplied standard connector to the unit.

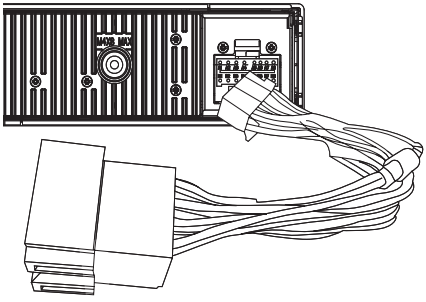

3 Connect the antenna and amplifier as illustrated, if applicable.

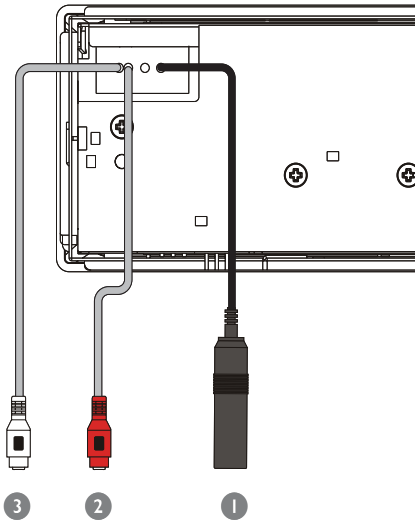

	Connector	Connect to
1	Antenna	Antenna
2	Rear line out (right)	Amplifier line in (right)
3	Rear line out (left)	Amplifier line in (left)

Connect wires: without ISO connectors

Caution

- Ensure that all loose leads are insulated with electrical tape.

1 Cut off the bigger end of the supplied standard connector.

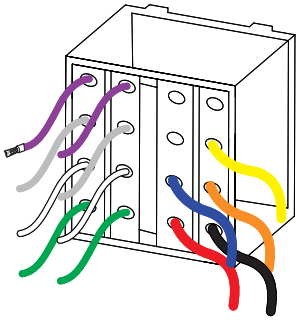

2 Check the car's wiring carefully and connect them to the supplied standard connector.

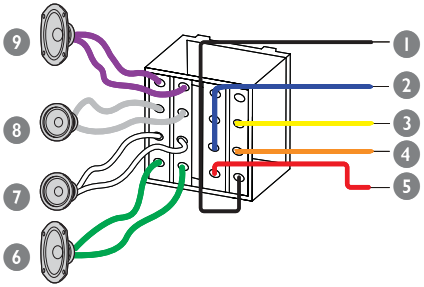

	Connector	Connect to
1	Black wire	**A metal surface of the car** First connect the black ground (earth) lead, then connect the yellow and red power supply leads.
2	Blue wire	**The electric antenna control lead or power supply lead of the antenna booster** If there is no electric antenna or antenna booster, or it is manually operated telescopic antenna, it is not necessary to connect this lead.
3	Yellow wire	**The +12V car battery which is live at all times.**
4	Orange/ White	**illumination switch.**
5	Red wire	**The +12V power terminal which is live in the accessory (ACC) position of the ignition switch** If there is no accessory position, connect to the +12V car battery terminal that is always live. Be sure to connect the black ground (earth) lead to a metal surface of the car first.
6	Green and green/black wires	**Left speaker (Rear)**
7	White and white/black wires	**Left speaker (Front)**
8	Gray and gray/black wires	**Right speaker (Front)**
9	Purple and purple/black wires	**Right speaker (Rear)**

3 Connect the supplied standard connector to the unit.

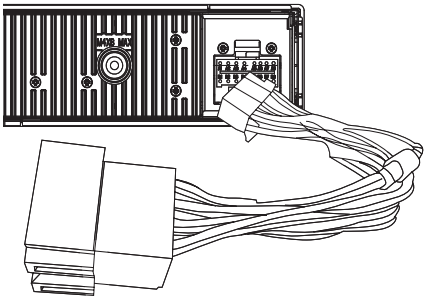

4 Connect the antenna and amplifier as illustrated, if applicable.

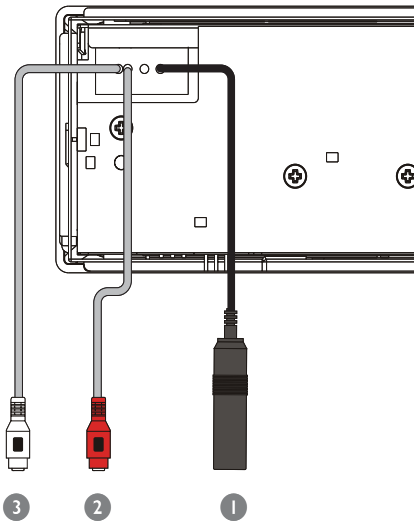

	Connector	Connect to
1	Antenna	Antenna
2	Rear line out (right)	Amplifier line in (right)
3	Rear line out (left)	Amplifier line in (left)

Attach the front panel

1 Attach the trim plate.

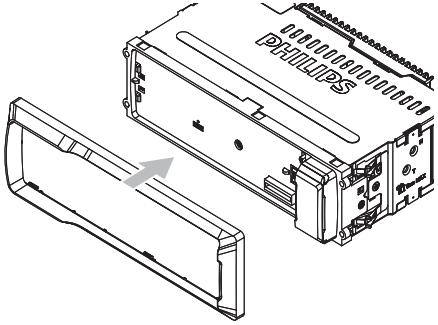

2 Insert the left side of the panel in the chassis until it is correctly engaged.

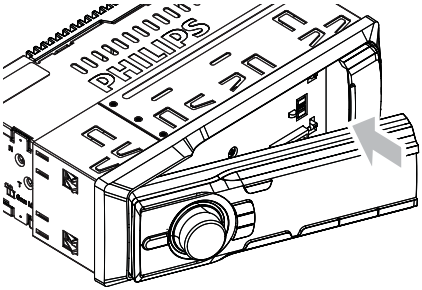

3 Press the right side of the panel until it is locked into place.

Mount into the dashboard

1 Ensure that car dashboard opening is within these measurements:

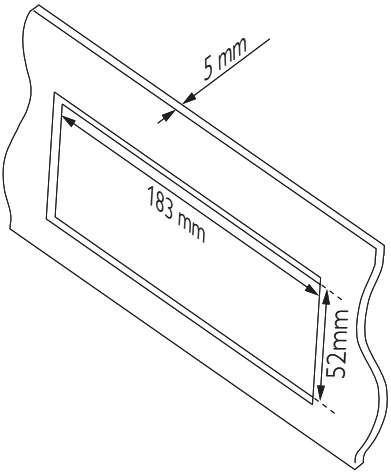

2 Remove the mounting sleeve with the supplied disassembly tools.

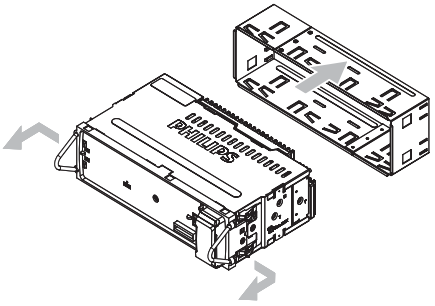

3 Install the sleeve into the dashboard and bend the tabs outward to fix the sleeve.

- Skip this step if the unit is not fixed by sleeve but supplied screws.

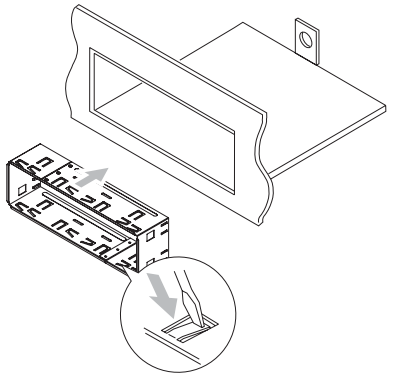

4 If the car does not have an on-board drive or navigation computer, disconnect the negative terminal of the car battery.

- If you disconnect the car battery in a car that has an on-board drive or navigation computer, the computer may lose its memory.
- If the car battery is not disconnected, to avoid short-circuit, ensure that bare wires do not touch each other.

5 Connect the supplied mounting bolt to the unit.

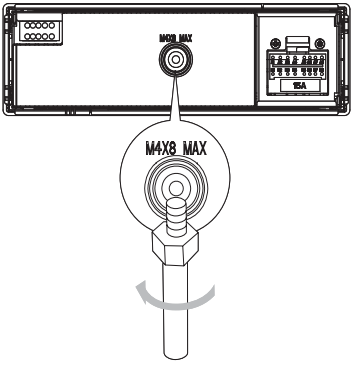

6 Place the supplied rubber cushion over the end of the mounting bolt.

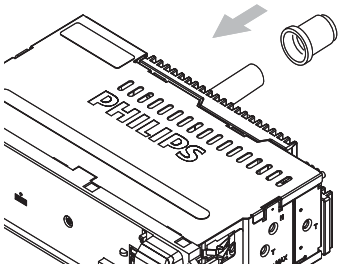

7 Slide the unit into the dashboard until you hear a click sound.

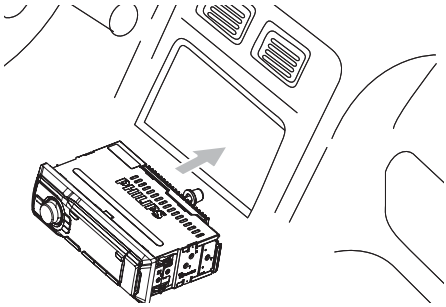

8 Reconnect the negative terminal of the car battery.

Install remote control battery

Caution

- Risk of explosion! Keep batteries away from heat, sunshine or fire. Never discard batteries in fire.
- Risk of decreased battery life! Never mix different brands or types of batteries.
- Risk of product damage! When the remote control is not used for long periods, remove the batteries.
- Perchlorate Material - special handling may apply. See www.dtsc.ca.gov/hazardouswaste/perchlorate.

For first-time use:

1 Remove the protective tab to activate the remote control battery.

To replace the remote control battery:

1 Open the battery compartment.
2 Insert 1 CR2025 batteries with correct polarity (+/-) as indicated.

Close the battery compartment.

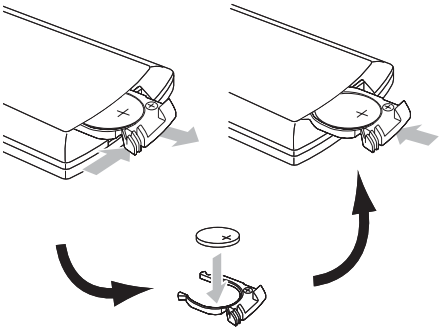

Turn on

1 Press ⏻ to turn on the unit.
   - To turn off the unit, press ⏻ for 3 seconds.

Set clock

1 Press **MENU/DISP** for 3 seconds.
2 Press **▲DBB** or **SEARCH▼** repeatedly until the currently clock is displayed.
3 Turn ⏻ in clockwise direction to set hour.
4 Press ⏻ to confirm.
5 Turn ⏻ in anti-clockwise direction to set minute.
6 Press ⏻ to confirm.

View clock

1 Press **MENU/DISP** repeatedly until the clock is displayed.

4 Listen to radio

Tune to a radio station

1 Press **SOURCE** to select Radio.
2 Press ▲**DBB** or **SEARCH**▼ to select band: **[FM1]**, **[FM2]**, **[FM3]**, **[AM1]**, or **[AM 2]**.
3 Press **LOC/DX** to select radio sensitivity:
[LOCAL] (local): Only station with strong signal can be broadcast.
[DX] (distance): Stations with strong and weak signals can be broadcast.
4 Press ⏮ or ⏭ to tune to a radio station manually.
↳ The radio station is broadcast.
• To search for radio station automatically, press ⏮ or ⏭ for 3 seconds.

Select stereo/mono broadcasting

For stations with weak signals: to improve the reception, change to monaural sound.

1 Press **MENU/DISP** for 3 seconds.
2 Press ▲**DBB** or **SEARCH**▼ repeatedly until **[STEREO]** or **[MONO]** is displayed.
3 Turn ⏻ to select a setting:
• **[STEREO]**: stereo broadcast.
• **[MONO]**: mono broadcast.
4 Press ⏻ to confirm.

Store radio stations in memory

You can store up to 6 stations in each band.

Store stations automatically

1 Press **SEARCH**▼ for 3 seconds.
↳ The six strongest stations of the selected band are saved in preset channels 1-6 automatically.

Store stations manually

1 Tune to the station that you want to store (see 'Tune to a radio station' on page 16).
2 Press one of the numbered buttons **1** to **6** for over 2 seconds.
↳ The station is saved in the selected channel.

Tune to a preset station

1 Press ▲**DBB** or **SEARCH**▼ to select band.
2 Press the number button **1** to **6** to select the preset station.

5 Play from USB/ SD/MMC device

Note

- Ensure that the USB or SD/MMC device contains playable music.

Insert USB device

1 Open the cover marked on the front panel.

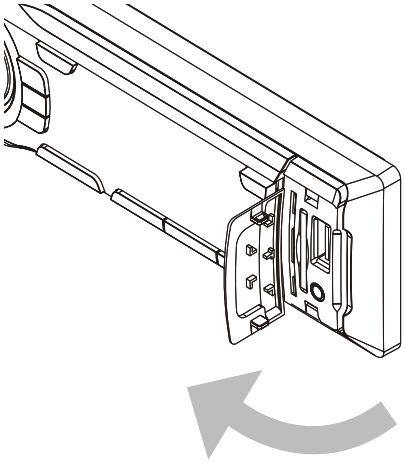

2 Insert the USB device into the USB socket.
↳ The unit starts playing from the USB device automatically.

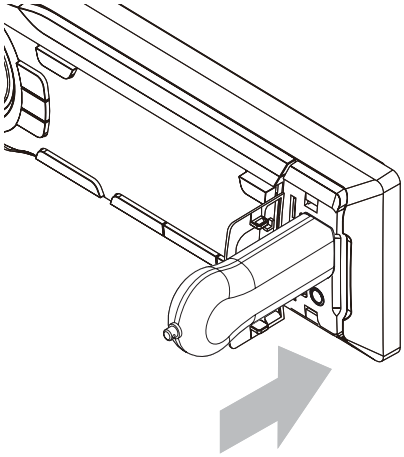

Remove the USB device

1 Press ⏻ to turn off the unit.
2 Remove the USB device.

Insert SD/MMC card

Note

- The system supports SDHC cards.

1 Open the cover marked on the front panel.
2 Insert the SD or MMC card into the card slot.
↳ The unit starts playing from the SD/ MMC card automatically.

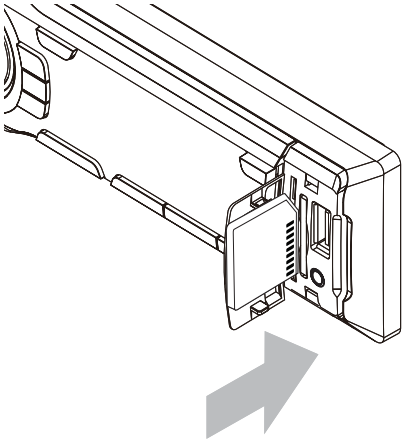

Remove the SD/MMC card

1 Press ⏻ to turn off the unit.
2 Press the card until you hear a click sound.
↳ The card is now disengaged.
3 Remove the SD or MMC card.

Control play

- To select a folder, press ▲DBB or SEARCH ▼.
- To skip to a track, press ⏮ or ⏭.
- To search within a track, press ⏮ or ⏭ for 3 seconds.
- To pause, press 1 ▶❚❚. To resume, press 1, ▶❚❚ again.

Search for an MP3/WMA track

1 Press SEARCH▼ for 3 seconds.
↳ Search menu is displayed.
↳ [FILE SCH] : search by track name.
↳ [FOLDER SCH] : search by folder sequence.
2 Turn ⏻ to select [FILE SCH] , then press ⏻ to confirm.
3 Turn ⏻ to enter character, then press ⏻.
4 Repeat step 3 to enter more characters.
5 Press ⏻ for 3 seconds to start searching.
↳ A list of matching tracks are displayed when search is finished.
6 Press ▲DBB or SEARCH▼ to skip over the list.
7 Press ⏻ to select a track.

View play information

1 During play USB/SD/MMC device, press MENU/DISP repeatedly to view:
- Track number and elapsed play time
- Artist
- Album
- Title
- Folder
- File
- Clock

Repeat play

During play, press 3, REP repeatedly to select:
- [REP 1] (repeat one track): play the current track repeatedly.
- [REP FOLD] (repeat one folder): play all tracks in the current folder repeatedly.
- [REP ALL] (repeat all tracks): play all tracks repeatedly.
- [REP OFF] (repeat off): cancel repeat play.

Random play

You can play the tracks in random order.
1 During play, press SHUF, 4 to select:

- **[SHUF ON]** : start random play for all tracks.
- **[SHUF OFF]** : cancel random play.

Intro play

You can play the first 10 seconds of each track.

1 During play, press **INTRO, 2** to select:
   - **[INT ON]** : After the first 10 seconds of each track have been played, play stops.
   - **[INT OFF]** : Cancel intro play and start normal play.

Listen to other devices

You can connect an external sound device to the unit.

1 Connect the device to the unit by using a 3.5 mm plug.

2 Press **SOURCE** repeatedly until **[MP3 LINK]** is displayed.

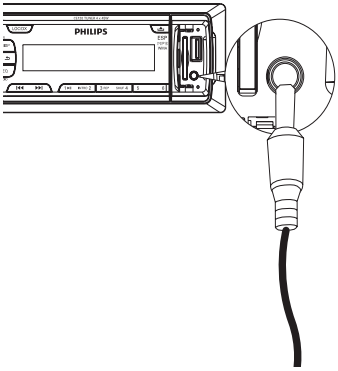

3 Operate the device (refer to the instructions supplied with the device).

6 Adjust sound

Adjust volume

1 Turn ⏻ clockwise/anticlockwise to increase/decrease volume.

Mute

You can turn off the sound of your audio.

1 During play, press **MUTE**⏻.
- To turn the sound back on, press **MUTE**⏻ again.

Toggle Dynamic Bass Boost on/off

1 Press **▲DBB** for 3 seconds to display the current setting.
↳ **[DBB ON]** : The Dynamic Bass Boost (DBB) function is on.
↳ **[DBB OFF]** : The DBB function is off.

2 Press **▲DBB** again for 3 seconds to change the DBB setting.

Select preset equalizer

1 Press **EQ/Audio**.
↳ The current Equalizer setting is displayed.

2 Press **EQ/Audio** again repeatedly to select a preset EQ:
- **[USER]** (user)
- **[FLAT]** (flat)
- **[POP]** (pop)
- **[TECHNO]** (techno)
- **[ROCK]** (rock)
- **[CLASSIC]** (classic)
- **[JAZZ]** (jazz)
- **[OPTIMAL]** (optimal)

Other sound settings

You can also adjust other sound settings:
- **[BAS]** (bass) range: -7 to +7
- **[TRE]** (treble) range: -7 to +7
- **[LOUD]** (loudness): OFF, ON.
- **[BAL]** (balance) range: 10Lto 10R. (L = left speaker, R = right speaker)
- **[FAD]** (fader) range: 10R to 10F. (R = rear speaker, F = front speaker)

Note

- Only when you selected the **[USER]** equalizer, the sound value adjusted can be retained.

1 Press **EQ/Audio** for 3seconds.
2 Press **▲DBB** or **SEARCH▼** repeatedly to select the item to be adjusted.
3 Turn ⏻ to select a value.
4 Press ⏻ to confirm.

7 Adjust system settings

Select blackout setting

You can set the screen to turn off automatically after the unit is idle for 10 or 20 seconds.

1. Press **MENU/DISP** for 3 seconds.
2. Turn ⏻ to select a setting:
   - **[BKO 10 S]** : Turn off the screen automatically 10 seconds after last operation.
   - **[BKO 20 S]** : Turn off the screen automatically 20 seconds after last operation.
   - **[BKO OFF]** : Never turn off the screen.
3. Press ⏻ to confirm.

Turn demo mode on/off

When demo mode is on, when the unit is idle for more than 2 minutes, all functions are displayed.

1. Press **MENU/DISP** for 3 seconds.
2. Press **▲DBB** or **SEARCH▼** repeatedly to until **[DEMO]** is displayed.
   ↳ The screen shows current Demo mode setting.
3. Turn ⏻ to select a setting:
   - **[DEMO ON]** : Turn on the demo mode.
   - **[DEMO OFF]** : Turn off the demo mode.
4. Press ⏻ to confirm.

Change button backlight color

You can select blue or red for the button backlight color.

1. Press **MENU/DISP** for 3 seconds.
2. Press **▲DBB** or **SEARCH▼** repeatedly to until **[KEY BLUE]** or **[KEY RED]** is displayed.
3. Turn ⏻ to select a setting:
   - **[KEY BLUE]**: Backlight turns blue
   - **[KEY RED]**: Backlight turns red.

Select start volume

Each time you turn on the unit, it can play at the last listened volume or at the preset volume.

1. Press **MENU/DISP** for 3 seconds.
2. Press **▲DBB** or **SEARCH▼** repeatedly to until **[V - LAST]** or **[V - ADJ]** is displayed.
3. Turn ⏻ to select a setting:
   - **[V - LAST]** : Each time you turn on the unit, the volume remains from its previous use.
   - **[V - ADJ]** : Each time you turn on the unit, the volume is at the preset level.
4. Press ⏻ to confirm.

Store preset volume

You can turn on the unit at a preset volume.

1. Select **[V - ADJ]** as the start volume (see 'Select start volume' on page 21).
2. Press **MENU/DISP** for 3 seconds.
3. Press **▲DBB** or **SEARCH▼** repeatedly to until **[A-VOL]** is displayed.
4. Turn ⏻ to select a value: 0 - 47.
5. Press ⏻ to confirm.

Turn beep sound on/off

Each time you press a button, the unit beeps. You can turn off/on this beep sound.

1 Press **MENU/DISP** for 3 seconds.
2 Press **▲DBB** or **SEARCH▼** repeatedly to until **[BEEP ON]** or **[BEEP OFF]** is displayed.
3 Turn ⓘ to select a setting:
   - **[BEEP ON]** : Turn on the beep sound.
   - **[BEEP OFF]** : Turn off the beep sound.
4 Press ⓘ to confirm.

Turn display scroll on/off

For track information that is longer than the display panel: you can select to cut off the remainder of the text, or scroll to display the full text.

Note

- If any special characters are present in the MP3 track name or album name, it may not display correctly on the screen because these characters are not supported.
- Some WMA is protected by Digital Rights Management (DRM), it cannot be played on the unit.
- Folders/files exceed the supported limit of the unit are not displayed or played.

1 Press **MENU/DISP** for 3 seconds.
2 Press **▲DBB** or **SEARCH▼** repeatedly to until **[ROLL ON]** or **[ROLL OFF]** is displayed.
3 Turn ⓘ to select a setting:
   - **[ROLL ON]** (scroll on): Auto scroll during play.
   - **[ROLL OFF]** (scroll off): No auto scroll display.
4 Press ⓘ to confirm.

Select shock-protect setting

You can select the shock protection setting, depending on the stability of your car and the condition of the road..

1 Press **MENU/DISP** for 3 seconds.
2 Press **▲DBB** or **SEARCH▼** repeatedly until **[ESP]** is displayed.
3 Turn ⓘ to select a setting:
   - **[ESP 12]**: select when the road is smooth and there are few bumps.
   - **[ESP 45]** select when the road is bumpy and unstable.
4 Press ⓘ to confirm the selection.

Reset

You can reset the unit to its default setting.

1 Detach the front panel (see 'Detach the front panel' on page 24).
2 Press the reset button by using a ball-point pen or a similar tool.
   ↳ All settings are erased except clock.

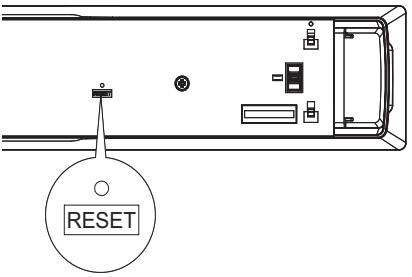

Default settings

Sound settings	
Equalizer	User
Bass	0
Treble	0
Loudness	OFF
Balance	0
Fader	0
System settings	
Source	Radio, FM1, 87.5
Demo	Off
Blackout	Off
Key color	Blue
Clock	Current time
ESP	10S
Local/Distance	Distance
Beep	On
Stereo/Mono	Stereo
V-Last/Adj	V-Last
Volume	20
Auto scroll	On

8 Others

Detach the front panel

You can detach the front panel to deter theft.

1 Press ⏏ to release the panel.

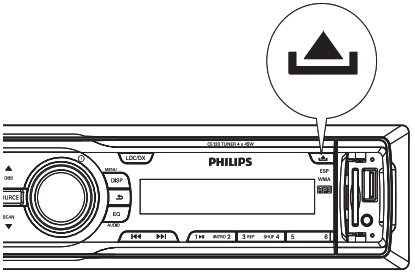

2 Pull the panel towards you to detach it from the chassis.

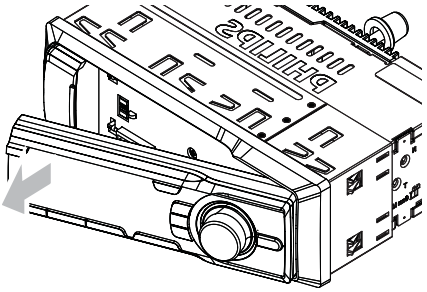

3 Store the panel in the supplied carry case to protect it from dirt or damage.

Remove the unit

To repair or replace the unit, remove it from the dashboard.

1 Detach the front panel.

2 Remove the unit with the removal keys.

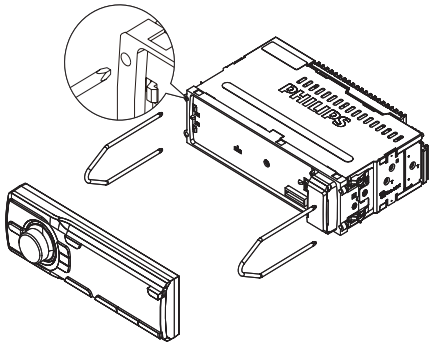

Replace fuse

If there is no power, the fuse may broke and need to be replaced.

1 Detach the front panel and take out the unit. (see 'Remove the unit' on page 24)

2 Check the electric connection.

3 Buy a fuse that matches the voltage of the damaged fuse (15A)

4 Replace the fuse.

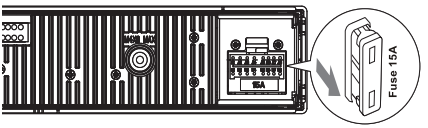

If the fuse is broken again after replacement, there might have internal malfunction. In such case, consult your Philips dealer.

9 Product information

Note

- Product information is subject to change without prior notice.

General

Power supply	12 V DC (11 V - 16 V), negative ground
Fuse	15 A
Suitable speaker impedance	4 - 8 Ω
Maximum power output	45 W x 4 channels
Continuous power output	22 W x 4 channels (4 Ω 10% T.H.D.)
Pre-Amp output voltage	2.0 V (USB play mode; 1 kHz, 0 dB, 10 kΩ load)
Aux-in level	≥ 500 mV
Dimensions (W x H x D)	188 x 58 x 128 MM
Weight	1.0 kg

Radio

Frequency range - FM	87.5 - 108.0 MHz (Europe) 87.5 - 107.9 MHz (American)
Frequency range - AM(MW)	522 - 1620 KHz (Europe) 530 - 1710 HKz (American)
Usable sensitivity - FM	3.2 uV
Usable sensitivity - AM(MW) (S/N = 20 dB)	30 uV
Frequency response	20 Hz - 20 KHz
Stereo separation	30 db (1 kHz)
Signal/noise ratio	>75 dB

Compatible USB devices:

- USB flash memory (USB 2.0 or USB1.1)
- USB flash players (USB 2.0 or USB1.1)
- memory cards

Supported formats:

- USB or memory file format FAT12, FAT16, FAT32 (sector size: 512 bytes)
- MP3 bit rate (data rate): 32-320 Kbps and variable bit rate
- WMA v9 or earlier
- Directory nesting up to a maximum of 8 levels
- Number of albums/ folders: maximum 99
- Number of tracks/titles: maximum 999
- ID3 tag v2.0 or later
- File name in Unicode UTF8 (maximum length: 128 bytes)

Unsupported formats:

- Empty albums: an empty album is an album that does not contain MP3/ WMA files, and is not be shown in the display.
- Unsupported file formats are skipped. For example, Word documents (.doc) or MP3 files with extension .dlf are ignored and not played.
- AAC, WAV, PCM audio files

- DRM protected WMA files (.wav, .m4a, .m4p, .mp4, .aac)
- WMA files in Lossless format

10 Troubleshooting

Caution

- Never remove the casing of this unit.

To keep the warranty valid, never try to repair the system yourself.
If you encounter problems when using this unit, check the following points before requesting service. If the problem remains unsolved, go to the Philips web site (www.Philips.com/support).
When you contact Philips, ensure that your unit is nearby and the model number and serial number are available (see 'Get started' on page 10).

No power or no sound.

- Car engine is not on. Turn the car engine on.
- Cable is not correctly connected. Check connections.
- Fuse is burnt. Replace fuse (see 'Replace fuse' on page 24).
- Volume is too low. Adjust volume (see 'Adjust volume' on page 20).
- If the above solutions cannot help, press the RESET button.

Noise in broadcasts.

- Signals are too weak. Select other stations with stronger signals.
- Check the connection of the car antenna.
- Change broadcast from Stereo to mono (see 'Select stereo/mono broadcasting' on page 16).

Preset stations lost.

- Battery cable is not correctly connected. Connect the battery cable to the terminal that is always live.

Display show ERR-12

- USB/SD/MMC data error. Check the USB device or SD/MMC card.

11 Glossary

M

MMC
MultimediaCard. A type of memory card with a flash memory.

MP3
A file format with a sound data compression system. MP3 is the abbreviation of Motion Picture Experts Group 1 (or MPEG-1) Audio Layer 3. With the MP3 format, one CD-R or CD-RW can contain about 10 times more data than a regular CD.

S

SD
Secure Digital. A type of memory card with a flash memory.

SDHC
Secure Digital High Capacity (SDHC) is a type of flash memory card based on the SDA 2.00 specification. The SDA 2.00 specification enables SD cards to reach higher capacities from 4GB to 32GB, and growing.

W

WMA (Windows Media Audio)
An audio format owned by Microsoft, is a part of Microsoft Windows Media technology. Includes Microsoft Digital Rights Management tools, Windows Media Video encoding technology, and Windows Media Audio encoding technology.

100% recycled paper
100% papier recyclé

© 2008 Koninklijke Philips Electronics N.V.
All rights reserved.