Register your product and get support at
www.philips.com/welcome

Streamium

NP2900

EN	User manual	1
	Contact information	46

PHILIPS

Contents

1 Important 3
Safety 3
Environmental notices 5

2 Mount NP2900 to a wall 6

3 Your NP2900 7
Overview 7
Top view 7
Front view 7
Rear view 7
Remote control 8

4 Prepare 10
Install remote control batteries 10
Position NP2900 10

5 Connect 11
Connect external audio devices 11
Connect AC power 11

6 Turn On and Switch to Active standby / Eco standby 12

7 First-time setup 13
View the demo 13
First-time connection to home network 13
First-time setup: Wireless connection with automatic IP address 14
First-time setup: Wireless connection with static IP address 15
First-time setup: Wired connection with automatic IP address 16
First-time setup: Wired connection with static IP address 16

8 Play 18
Adjust volume 18
Mute the sound 18
Shuffle play 18
Repeat play 18
Wirelessly stream music and pictures from a computer 18
Install Media Browser software 19
Configure a PC to share music and pictures 19
Configure a MAC to share music and pictures 19
Alphanumeric search 19
Quick jump navigation 20
SuperScroll / Scroll at high speed 20
Internet radio 21
Listen to Internet radio 21
Play preset Internet radio stations 21
Save Internet radio stations to presets 21
Mark radio stations as Favorites 22
Listen to Favorite Stations 22
Remove a Favorite Station 22
Manually add Internet radio stations 22
Listen to My Media 23
Listen to Rhapsody® music services 23
Rate Rhapsody® music 24

9 Settings 25
Play mode 25
Sound settings 25
LivingSound 25
FullSound 26
Equalizer settings 26
Slideshow settings 26
Display settings 26
Brightness settings when NP2900 is turned on 26
Brightness settings when NP2900 is switched to standby 26
Aux in settings 26
Clicker sound 27
Album art 27
Clock settings 27
Alarm settings 27
Network settings 27

English

Wireless connection with automatic IP address 28
Wireless connection with static IP address 29
Wired connection with automatic IP address 30
Wired connection with static IP address 30
Location and time zone 31
Language 31
Register NP2900 31
Unregister NP2900 32
Registration information 32
Check for SW upgrades 33
Information 33
Demo mode 33
Call center numbers 34
Restore factory settings 34
Legal information 34

10 Maintenance 35
Cleaning 35

11 Technical data 36
Supported audio file formats 37
Supported picture file formats 37
Supplied accessories 37
Computer connection requirements 38

12 Troubleshooting 39

13 Glossary 40

14 Contact information 46

1 Important

Safety

Know these safety symbols

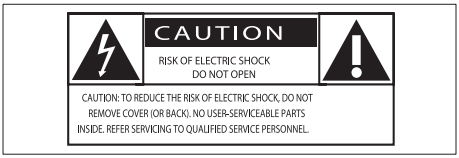

This 'bolt of lightning' indicates uninsulated material within your unit may cause an electrical shock. For the safety of everyone in your household, please do not remove product covering.
The 'exclamation mark' calls attention to features for which you should read the enclosed literature closely to prevent operating and maintenance problems.
WARNING: To reduce the risk of fire or electric shock, this apparatus should not be exposed to rain or moisture and objects filled with liquids, such as vases, should not be placed on this apparatus.
CAUTION: To prevent electric shock, fully insert the plug. (For regions with polarized plugs: To prevent electric shock, match wide blade to wide slot.)

Information for USA & Canada:

1. Read these instructions.
2. Keep these instructions.
3. Heed all warnings.
4. Follow all instructions.
5. Do not use this apparatus near water.
6. Clean only with dry cloth.
7. Do not block any ventilation openings. Install in accordance with the manufacturer's instructions.
8. Do not install near any heat sources such as radiators, heat registers, stoves, or other apparatus (including amplifiers) that produce heat.
9. For countries with a polarized mains, do not defeat the safety purpose of the polarized or grounding-type plug. A polarized plug has two blades with one wider than the other. A grounding type plug has two blades and a third grounding prong. The wide blade or the third prong are provided for your safety. If the provided plug does not fit into your outlet, consult an electrician for replacement of the obsolete outlet.
10. Caution: To prevent electric shock, match the wide blade of the plug to the wide slot, fully insert:

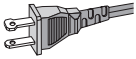

11. Protect the power cord from being walked on or pinched, particularly at plugs.
12. Battery usage CAUTION to prevent battery leakage which may result in bodily injury, property damage, or damage to the unit:
    - Install all batteries correctly, + and - as marked on the unit.
    - Do not mix batteries (old and new or carbon and alkaline, etc.).
    - Remove batteries when the unit is not used for a long time.
13. Apparatus shall not be exposed to dripping or splashing.
14. Do not place any sources of danger on the apparatus (e.g. liquid filled objects, lighted candles).

⑮ Only use attachments/accessories specified by the manufacturer.

⑯ Use only with the cart, stand, tripod, bracket, or table specified by the manufacturer or sold with the apparatus. When a cart is used, use caution when moving the cart/apparatus combination to avoid injury from tip-over.

⑰ Unplug this apparatus during lightning storms or when unused for long periods of time.

⑱ Refer all servicing to qualified service personnel. Servicing is required when the apparatus has been damaged in any way, such as power-supply cord or plug is damaged, liquid has been spilled or objects have fallen into the apparatus, the apparatus has been exposed to rain or moisture, does not operate normally, or has been dropped.

⑲ This product may contain lead and mercury. Disposal of these materials may be regulated due to environmental considerations. For disposal or recycling information, please contact your local authorities or the Electronic Industries Alliance: www.eiae.org.

Hearing Safety

Listen at a moderate volume:
Using headphones at a high volume can impair your hearing. This product can produce sounds in decibel ranges that may cause hearing loss for a normal person, even for exposure less than a minute. The higher decibel ranges are offered for those that may have already experienced some hearing loss.
Sound can be deceiving. Over time your hearing 'comfort level' adapts to higher volumes of sound. So after prolonged listening, what sounds 'normal' can actually be loud and harmful to your hearing. To guard against this, set your volume to a safe level before your hearing adapts and leave it there.
To establish a safe volume level:
Set your volume control at a low setting.
Slowly increase the sound until you can hear it comfortably and clearly, without distortion.
Listen for reasonable periods of time:
Prolonged exposure to sound, even at normally 'safe' levels, can also cause hearing loss.
Be sure to use your equipment reasonably and take appropriate breaks.
Be sure to observe the following guidelines when using your headphones.
Listen at reasonable volumes for reasonable periods of time.
Be careful not to adjust the volume as your hearing adapts.
Do not turn up the volume so high that you can't hear what's around you.
You should use caution or temporarily discontinue use in potentially hazardous situations.
Do not use headphones while operating a motorized vehicle, cycling, skateboarding, etc.; it may create a traffic hazard and is illegal in many areas.

Environmental notices

Class II equipment symbol:

This symbol indicates that this product has a double insulation system.

Philips
NP2900

Modifications

Modifications not authorized by the manufacturer may void user's authority to operate this product.

Disposal information for NP2900:

Your product is designed and manufactured with high quality materials and components, which can be recycled and reused.
When you see the crossed-out wheel bin symbol attached to a product, it means the product is covered by the European Directive 2002/96/EC:

Never dispose of your product with other household waste. Please inform yourself about the local rules on the separate collection of electrical and electronic products. The correct disposal of your old product helps prevent potentially negative consequences on the environment and human health.

Information about the use of batteries:

Caution

- Risk of leakage:
- Only use the specified type of batteries.
- Do not mix new and used batteries.
- Do not mix different brands of batteries.
- Observe correct polarity.
- Remove batteries from products that are not in use for a longer period of time.
- Store batteries in a dry place.
- Risk of injury:
- Wear gloves when handling leaking batteries.
- Keep batteries out of reach of children and pets.
- Risk of explosion:
- Do not short circuit batteries.
- Do not expose batteries to excessive heat.
- Do not throw batteries into the fire.
- Do not damage or disassemble batteries.
- Do not recharge non-rechargeable batteries.

Battery disposal information:

Your product contains batteries covered by the European Directive 2006/66/EC, which cannot be disposed of with normal household waste.
Please inform yourself about the local rules on separate collection of batteries. The correct disposal of batteries helps prevent potentially negative consequences on the environment and human health.

CE 0984 R&TTE Directive 1999/5/EC

BE ✓	DK ✓	GR ✓	ES ✓	FR ✓
IE ✓	IT ✓	LU ✓	NL ✓	AT ✓
PT ✓	FI ✓	SE ✓	UK ✓	NO ✓
DE ✓	CH ✓	PL ✓	HU ✓	SK ✓
CZ ✓	CY ✓	IS ✓		

2 Mount NP2900 to a wall

Caution

- Risk of product damage! Always consult professional personnel to safely mount the product to a wall.

Warning

- Risk of injury! Ensure that no supply ducts such as gas, water or electricity are harmed when you drill the holes.

What's supplied in the mounting kit

- 1 x mounting bracket

What else you'll need

- Suitable screws and wall anchors for each of the holes in the provided mounting bracket
- electric drill
- screwdriver

Remove the stand:

1 Use a screwdriver to remove the screws of the stand.
Keep the screws for the wall mounting bracket!

Mount NP2900:

1 Align the bracket in the chosen location on a wall. Use a pencil to mark the drilling positions.

2 Drill the holes as marked.

3 Fix suitable screws (not provided) and wall anchors (not provided) to the holes in the wall.

4 Use a screwdriver and fasten the bracket to the NP2900 with the screws that you removed from the stand as shown.

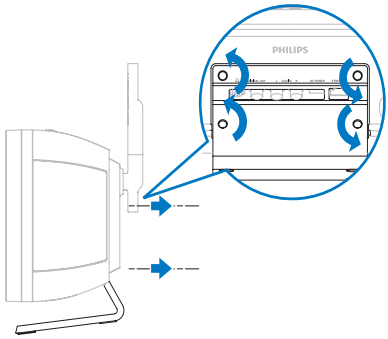

5 Hook / mount NP2900 in place as shown.

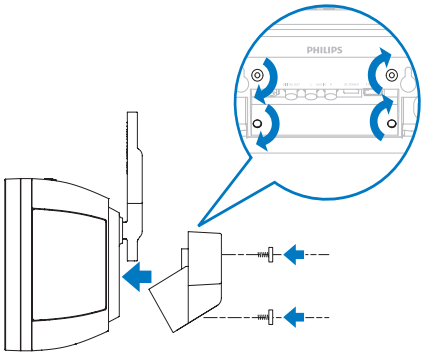

3 Your NP2900

Congratulations on your purchase and welcome to Philips!
To fully benefit from the support that Philips offers, register your product at **www.philips.com/welcome**.

Overview

Top view

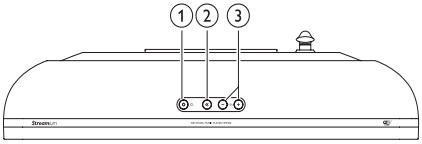

① ⏻ (On / Standby / Eco standby)

② 🔇 (mute the sound)

③ +VOL − (adjust the volume)

Front view

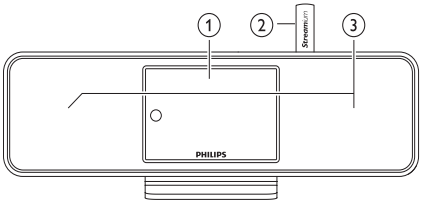

① Display

② Wi-Fi antenna

③ Loudspeakers

Rear view

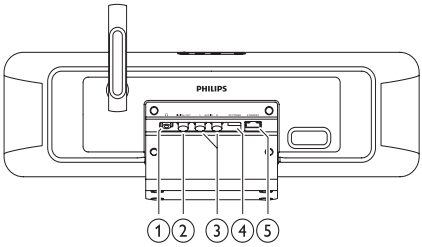

① 🎧 headphone jack

② DIGITAL OUT (black) jack

③ AUX IN L / R (red/white) jacks

④ POWER SUPPLY jack

⑤ ETHERNET jack

English

Remote control

You can control NP2900 with the remote control.

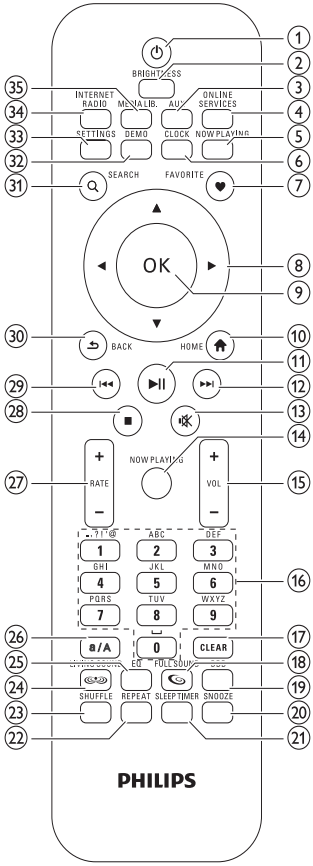

1. ⏻ (On / Standby)
2. BRIGHTNESS (adjust display illumination)
3. AUX (select external source)
4. ONLINE SERVICES (go to optional online services menu)
5. NOW PLAYING (go to current play screen)
6. CLOCK (activate time display)
7. FAVORITE (mark current station as favorite)
8. ▲▼◀▶ (navigate)
9. OK (confirm)
10. HOME (go to Home menu)
11. ▶❚❚ (play/pause current file / SuperPlay™ current list)
12. ▶▶❙ (skip to next file)
13. 🔇 (mute/unmute sound)
14. NOW PLAYING (go to current play screen)
15. +VOL − (increase/decrease play volume)
16. Alphanumeric buttons
17. CLEAR (press to delete last character entry / press and hold to delete whole line entry)
18. FULLSOUND (activate/deactivate FullSound™)
19. DBB (activate/deactivate Dynamic Bass Boost)
20. SNOOZE (stop alarm sound for 15 minutes)
21. SLEEP TIMER (toggle through sleep timer options)
22. REPEAT (toggle through repeat play options)
23. SHUFFLE (activate/deactivate random order play)
24. LIVINGSOUND (deactivate/activate LivingSound™)
25. EQ (toggle through preset equalizer options)
26. a/A (change shift for alphanumeric entry)

㉗ +RATE − (increase/decrease rating* of current music)

㉘ ■ (stop)

㉙ ⏮ (skip to previous file / clear last entry)

㉚ BACK ⮌ (go back to previous screen)

㉛ SEARCH (search files)

㉜ DEMO (activate demo play)

㉝ SETTINGS (go to Settings menu)

㉞ INTERNET RADIO (go to Internet radio menu)

㉟ MEDIA LIB. (go to Media library menu)

Note

- *Rating current music is available only for music services that support rating.

4 Prepare

Install remote control batteries

Caution

- Risk of explosion! Keep batteries away from heat, sunshine or fire. Never discard batteries in fire.
- Risk of decreased battery life! Never mix different brands or types of batteries.
- Risk of product damage! When the remote control is not used for long periods, remove the batteries.

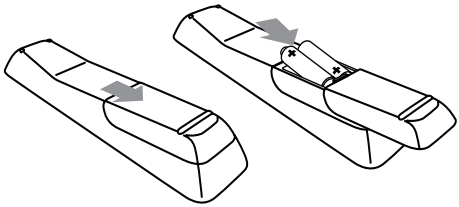

Position NP2900

Caution

- Risk of product damage! Place NP2900 on a surface that is level, flat, and strong enough to support the weight of NP2900.

5 Connect

Connect external audio devices

You can play music from an external appliance that is connected to the red and white **AUX IN** jacks of NP2900.

1 Consult the user manual of the external appliance to connect the audio cable (sold separately) to the audio output jack of the external appliance.

2 Connect the other end of the audio cable (sold separately) to the **AUX IN L / R** jacks of NP2900.

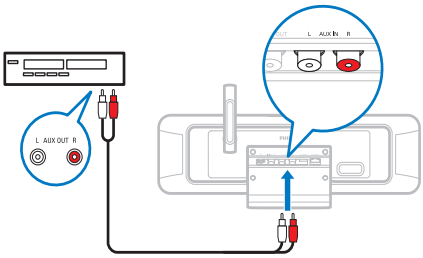

3 On the remote control of NP2900 press **AUX**.

4 Operate the controls of the external appliance to play music.

Connect AC power

Warning

- Risk of product damage! Ensure that the power supply voltage corresponds to the voltage printed on the back or the underside of the product.

1 Connect NP2900 to the power supply

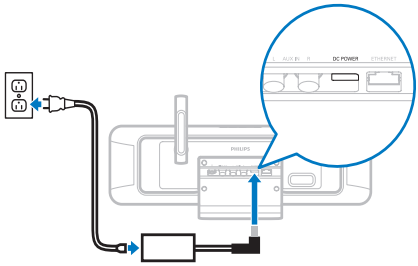

2 Continue with the steps in chapter **First-time setup**.

Note

- The type plate information is located at the back or at the underside of the product.

English

6 Turn On and Switch to Active standby / Eco standby

You can select from the following status options:

- **On** (the full display and the remote control are active, button LED is off)
- **Active standby** (the clock display and the remote control are active, button LED is red)
- **Eco standby** (the display and the remote control are deactivated, button LED is off)

In status **On** or **Active standby**,

1 press the ⏻ on the remote control to toggle NP2900 between **Active standby** and **On**.

2 press and hold the ⏻ on NP2900 to switch to **Eco standby**.

In status **Eco standby**,

1 press the ⏻ button on NP2900 or on the remote control to turn the NP2900 **On**.

Note

- In stop (idle) mode, if no buttons are pressed for 20 minutes, NP2900 switches to Active standby.

7 First-time setup

This is how to navigate and select with the remote control:

- Press ▲ or ▼ to select a menu option.
- Press **OK** to confirm a selection.
- Press **BACK** ⮌ to go back to the previous screen.
- Press **HOME** to go to the Home menu.

When you connect NP2900 to the power supply for the first time, NP2900 displays the prompt for the language selection.

1 Select the language and confirm.
   ↳ NP2900 displays the prompt for the optional demo play.

   You have two options:

- View the demo.
- Complete the first-time setup.

Tip

- After the first-time set-up, you can change the language in the Settings menu.

View the demo

1 Select **"[Yes, show me the demo]"**, to view the demo.
   ↳ The demo plays continuously until you exit the demo play.

2 To exit the demo play, press ⏻.

Note

- NP2900 remains in first-time setup status until you select **[No]** to decline the demo play.
- You can start the demo play again with the **DEMO** button on the remote control or in the Settings menu of NP2900.

First-time connection to home network

After you select **[No]** to decline to view the demo, NP2900 prompts you to select your location / time zone. NP2900 also reminds you to register NP2900 at **www.philips.com/welcome** and to install the PC software.
This is how to navigate and select with the remote control:

- Press ▲ or ▼ to select a menu option.
- Press **OK** to confirm a selection.
- Press **BACK** ⮌ to go back to the previous screen.
- Press **HOME** to go to the Home menu.

1 Select the location / time zone and confirm.
   ↳ NP2900 shows the prompt for the network connection.

2 Select **[Yes]**, to create a connection to the network.
   ↳ NP2900 shows the prompt for the network setup (if no network has been set up yet).
   ↳ Select **[No]** to exit the setup and go to the Home menu.

3 Continue with one of the following options:

- First-time setup: **Wireless network connection with automatic IP address**
  This setup requires the following:
  - A wireless access point or wireless router with broadband Internet access
  - Manual entry of your encryption key (for encrypted network connections only)
- First-time setup: **Wireless network connection with static IP address**
  This setup requires the following:
  - A wireless access point or wireless router with broadband Internet access
  - Manual entry of your IP address.

- Manual entry of your encryption key (for encrypted network connections only)
- First-time setup: **Wired (Ethernet) network connection with automatic IP address**
  This setup requires the following:
  - A wired access point or wired router with broadband Internet access and a free Ethernet port
  - An Ethernet cable (sold separately).
- First-time setup: **Wired (Ethernet) network connection with static IP address**
  This setup requires the following:
  - A wired access point or wired router with broadband Internet access and a free Ethernet port
  - Manual entry of your IP address.
  - An Ethernet cable (sold separately).

First-time setup: Wireless connection with automatic IP address

This is how to navigate and select with the remote control:

- Press ▲ or ▼ to select a menu option.
- Press **OK** to confirm a selection.
- Press **BACK** ⮌ to go back to the previous screen.
- Press **HOME** to go to the Home menu.

The alphanumeric buttons of the remote control are multi-function buttons:

- To select a number or an alphanumeric character, press a button once or repeatedly until you see the number or alphabetic character in the display of NP2900.
- To cycle through the alphanumeric characters that are available, press a button repeatedly.
- To delete the last character entry from the display, press **CLEAR**.
  - To delete the whole last line entry from the display, press and hold **CLEAR**.

The onscreen display guides you through the process of connecting NP2900 to your home network and the Internet. This section describes the typical wireless setup with automatic IP address. You can also follow the onscreen prompts for advanced configurations that are not described in this manual.

1 Ensure that your network name and network password or encryption key are available.

2 Turn on your wireless access point or wireless router with broadband Internet access.

3 Follow the steps in chapter **First-time connection to home network** until NP2900 shows the prompt for the network setup.

4 Select **[Wireless (WiFi)]** to start the network setup process.

- For wireless routers with Wi-Fi protection system (WPS) that supports push button configuration (PBC): On the router, press the WPS PBC push button to activate. On NP2900 press **OK** to confirm.)
- For wireless routers with Wi-Fi protection system (WPS) that supports a personal identification number (PIN): On NP2900 select WPS PIN, then enter the displayed PIN on the router.
- For other wireless routers:
  ↳ NP2900 searches for networks.

1 Select your network from the list of found networks and confirm.
  - Enter the encryption key (if required) and confirm.
  - NP2900 acquires the automatic IP address.
  - NP2900 shows the confirmation for the connection to the network.
  - NP2900 shows the prompt for the connection to the Internet.

2 Select **[Yes]** to connect to the Internet.
↳ NP2900 shows the confirmation for the connection to the Internet.

Note

- You can enter more than one encryption key. In this case, NP2900 prompts you to select the default encryption key.

First-time setup: Wireless connection with static IP address

This is how to navigate and select with the remote control:

- Press ▲ or ▼ to select a menu option.
- Press **OK** to confirm a selection.
- Press **BACK** ⮌ to go back to the previous screen.
- Press **HOME** to go to the Home menu.

The alphanumeric buttons of the remote control are multi-function buttons:

- To select a number or an alphanumeric character, press a button once or repeatedly until you see the number or alphabetic character in the display of NP2900.
- To cycle through the alphanumeric characters that are available, press a button repeatedly.
- To delete the last character entry from the display, press **CLEAR**.
  - To delete the whole last line entry from the display, press and hold **CLEAR**.

The onscreen display guides you through the process of connecting NP2900 to your home network and the Internet. This section describes the typical wireless setup with static IP address. You can also follow the onscreen prompts for advanced configurations that are not described in this manual.

1 Ensure that your network name and network password or encryption key are available.

2 Turn on your wireless access point or wireless router with broadband Internet access.

3 Follow the steps in chapter **First-time connection to home network** until NP2900 shows the prompt for the network setup.

4 Select **[Wireless (WiFi)]** to start the network setup process.

- For wireless routers with Wi-Fi protection system (WPS) that supports push button configuration (PBC): On the router, press the WPS PBC push button to activate. On NP2900 press **OK** to confirm.)
- For wireless routers with Wi-Fi protection system (WPS) that supports a personal identification number (PIN): On NP2900 select WPS PIN, then enter the displayed PIN on the router.
- For other wireless routers:
  ↳ NP2900 searches for networks.

1 Select your network from the list of found networks and confirm.
- Enter the encryption key (if required) and confirm.
- NP2900 tries to acquire an automatic IP address.

2 Press **BACK** ⮌ to enter your IP address manually.

3 Enter your static IP address and confirm.
↳ NP2900 shows the confirmation for the connection to the network.
↳ NP2900 shows the prompt for the connection to the Internet.

4 Select **[Yes]** to connect to the Internet.
↳ NP2900 shows the confirmation for the connection to the Internet.

Note

- You can enter more than one encryption key. In this case, NP2900 prompts you to select the default encryption key.

First-time setup: Wired connection with automatic IP address

This is how to navigate and select with the remote control:

- Press ▲ or ▼ to select a menu option.
- Press **OK** to confirm a selection.
- Press **BACK** ⮌ to go back to the previous screen.
- Press **HOME** to go to the Home menu.

The alphanumeric buttons of the remote control are multi-function buttons:

- To select a number or an alphanumeric character, press a button once or repeatedly until you see the number or alphabetic character in the display of NP2900.
- To cycle through the alphanumeric characters that are available, press a button repeatedly.
- To delete the last character entry from the display, press **CLEAR**.
  - To delete the whole last line entry from the display, press and hold **CLEAR**.

The onscreen display guides you through the process of connecting NP2900 to your home network and the Internet. This section describes the typical wired setup with automatic IP address. You can also follow the onscreen prompts for advanced configurations that are not described in this manual.

1 Connect an Ethernet cable (sold separately) to the **ETHERNET** jack of NP2900 and the Ethernet jack of the wired router.

2 Ensure that the wired router is turned on and has broadband Internet access.

3 Follow the steps in chapter **First-time connection to home network** until NP2900 shows the prompt for the network setup.

4 Select **[Wired (Ethernet)]** to start the network setup process.
   ↳ NP2900 acquires the automatic IP address.
   ↳ NP2900 shows the confirmation for the connection to the network.
   ↳ NP2900 shows the prompt for the connection to the Internet.

5 Select **[Yes]** to connect to the Internet.
   ↳ NP2900 shows the confirmation for the connection to the Internet.

First-time setup: Wired connection with static IP address

This is how to navigate and select with the remote control:

- Press ▲ or ▼ to select a menu option.
- Press **OK** to confirm a selection.
- Press **BACK** ⮌ to go back to the previous screen.
- Press **HOME** to go to the Home menu.

The alphanumeric buttons of the remote control are multi-function buttons:

- To select a number or an alphanumeric character, press a button once or repeatedly until you see the number or alphabetic character in the display of NP2900.
- To cycle through the alphanumeric characters that are available, press a button repeatedly.
- To delete the last character entry from the display, press **CLEAR**.
  - To delete the whole last line entry from the display, press and hold **CLEAR**.

The onscreen display guides you through the process of connecting NP2900 to your home network and the Internet. This section describes the typical wired setup with static IP address. You can also follow the onscreen prompts for advanced configurations that are not described in this manual.

1 Connect an Ethernet cable (sold separately) to the **ETHERNET** jack of NP2900 and the Ethernet jack of the wired router.

2 Ensure that the wired router is turned on and has broadband Internet access.

3 Follow the steps in chapter **First-time connection to home network** until NP2900 shows the prompt for the network setup.

4 Select **[Wired (Ethernet)]** to start the network setup process.
   ↳ NP2900 tries to acquire an automatic IP address.
   ↳ Press **BACK** ⮌ to enter your IP address manually.

5 Enter your static IP address and confirm.
   ↳ NP2900 shows the confirmation for the connection to the network.
   ↳ NP2900 shows the prompt for the connection to the Internet.

6 Select **[Yes]** to connect to the Internet.
   ↳ NP2900 shows the confirmation for the connection to the Internet.

8 Play

You need the remote control to view and play media files.
This is how to navigate and select with the remote control:

- Press ▲ or ▼ to select a menu option.
- Press **OK** to confirm a selection.
- Press **BACK** ⮌ to go back to the previous screen.
- Press **HOME** to go to the Home menu.

The play and pause operations on the remote control of NP2900 are the same for any media source that you choose:

1 Press **HOME**.
2 Select the source.
3 Select the options.
4 Press ▶❚❚ to play.
   - Press ▶❚❚ to toggle between pause and play.
5 Press ■ to stop.

Tip

- The following chapters explain the play options and media sources that are available.

Adjust volume

1 During play, press **+VOL** − to adjust the volume.

Mute the sound

1 During play, press **MUTE** to toggle the sound off and on.

Shuffle play

You can play the audio files of the current selection in random order (shuffled).

1 During play, press **SHUFFLE** to toggle the shuffle function on and off.

Repeat play

You can repeat one or all audio files of the current selection.

1 In play mode, press **REPEAT** to toggle the repeat function as follows:
   - **[Repeat 1]**
   - The current audio file is continuously repeated until another mode or setting is selected.
   - **[Repeat all]**
   - All audio files of the current selection are continuously repeated until another mode or setting is selected.
   - **[Off]** (default)
   - Audio files are played once (normal play).

Wirelessly stream music and pictures from a computer

You can wirelessly stream music and pictures to NP2900 from a connected computer. The following chapters show you how to

- install the software on your computer
- configure the computer to share your music and pictures

Note

- If Media Browser for Philips or Twonky Media is already installed on the computer, you can skip the installation section and continue with the configuration.
- For any other media players, refer to the instructions of the player.

Install Media Browser software

1 On the computer, insert the supplied software CD.
   ↳ Installation of the following software starts:
   ↳ Media Browser for Philips (on a PC)
   ↳ Twonky Media (on a MAC)

2 Follow the instructions on the computer to install the software.

Configure a PC to share music and pictures

You can share music and pictures from a PC with NP2900. This chapter shows you how to configure the PC to share music and pictures.

1 Follow the instructions to install Media Browser for Philips.

2 On the PC, click **Start** > **Programs** > **Media Browser** > **Run Media Browser**.

3 Go to **Settings** > **Server Settings** to check that you have selected the correct server.

4 Choose **Basic Settings**.

5 In the **Basic Seting** of the Configuration Page,
   - to manually locate the music and pictures, click **Browse**
   - to manually add a new content directory, click **Add**

6 On the remote control of NP2900, press **HOME**.

7 Select **[Media Library]** and confirm with **OK**.
   ↳ The display shows **[Searching for UPnP music servers…]**.

8 Press ▲▼ to select the server name and confirm with **OK**.

Configure a MAC to share music and pictures

You can share music and pictures from a MAC with NP2900. This chapter shows you how to configure the MAC to share music and pictures.

1 Follow the instructions to install Twonky Media software.

2 On the MAC, click **Go** > **Applications** > **Twonky Media**.

3 On the desktop, click **Configure Twonky Media**.

4 In the **Basic Setup** of the Configuration Page, click on **Sharing**.
   ↳ The content directories are scanned.
   ↳ To manually locate the content directory, click **Browse**.
   ↳ To manually add a new content directory, click **Add new content directory**.
   ↳ To save the changes, press **Save Changes**.

5 On the remote control of NP2900, press **HOME**.

6 Select **[Media Library]** and confirm with **OK**.
   ↳ The display shows **[Searching for UPnP music servers…]**, followed by the list of media servers.

7 Press ▲▼ to select the server name and confirm with **OK**.

Alphanumeric search

You can perform an alphanumeric search for specific media files on a connected UPnP device.
This is how to navigate and select with the remote control:

- Press ▲ or ▼ to select a menu option.
- Press **OK** to confirm a selection.

- Press **BACK** ⮌ to go back to the previous screen.
- Press **HOME** to go to the Home menu.

The alphanumeric buttons of the remote control are multi-function buttons:

- To select a number or an alphanumeric character, press a button once or repeatedly until you see the number or alphabetic character in the display of NP2900.
- To cycle through the alphanumeric characters that are available, press a button repeatedly.
- To delete the last character entry from the display, press **CLEAR**.
  - To delete the whole last line entry from the display, press and hold **CLEAR**.

This is how to use the alphanumeric search feature:

1 Turn on NP2900.
2 Press **MEDIA LIB.**.
  ↳ The display shows the available servers.
3 Select the server.
  ↳ The display shows the available lists.
4 Select the list.
5 Press **SEARCH**.
  ↳ The display shows a text box.
6 Press the alphanumeric buttons on the remote control to enter the search word.
7 Press **OK** to start the search.
  ↳ The display shows the closest alphabetical match.
8 To stop the search, press ■.
  - Press **HOME** to go to the Home menu.

Quick jump navigation

The alphanumeric buttons of the remote control are multi-function buttons:

- To select a number or an alphanumeric character, press a button once or repeatedly until you see the number or alphabetic character in the display of NP2900.
- To cycle through the alphanumeric characters that are available, press a button repeatedly.
- To delete the last character entry from the display, press **CLEAR**.
- To delete the whole last line entry from the display, press and hold **CLEAR**.

The quick jump feature of NP2900 behaves like the text input method commonly used on mobile phones.

1 While inside a list, press an alphanumeric button once or more to select a character.
  ↳ The quick jump feature displays the first object in the current list that begins with the selected character (e.g. a track name inside the track list) .

SuperScroll / Scroll at high speed

You can quickly find a file with SuperScroll™. The SuperScroll™ feature enables you to scroll through all files in the current list and control the speed.

1 Turn on NP2900.
2 When a list is displayed, press and hold ▲ ▼ to scroll through the list at high speed.
3 Release the button, to stop the scroll.

Internet radio

Note

- Internet radio features require broadband Internet access.

Listen to Internet radio

1 Turn on NP2900.

2 Ensure that NP2900 is connected to broadband Internet.

3 Press **INTERNET RADIO** to view the options menu
   - **[Favorite stations]** (lists the Internet radio stations that you have marked as Favorite Station)
   - **[Recently played]** (lists the most recently played Internet radio stations)
   - **[Search]** (lets you search for Internet radio stations)
   - **[All stations]** (lists all Internet radio stations, categorized by genres)
   - **[Recorded shows]** (lists all recorded Internet radio shows)
   - **[My Media]** (lists the Internet radio stations that you have entered at **Club Philips** under **Streamium Management**)

4 Press ▲ or ▼, then ▶ to select the option.
   - To listen to a specific Internet radio station, select option **[Search]**, then use the alphanumeric buttons to enter the radio station name.

- Press **HOME** to go to the Home menu.

Note

- Internet radio features require broadband Internet access.

Play preset Internet radio stations

The Internet radio feature includes presets that are customized to the regional settings of NP2900. You can choose from a selection of 10 default Internet radio stations. You can also overwrite these presets with your own choices.

1 Turn on NP2900.

2 Ensure that NP2900 is connected to the Internet.

3 Select **[Internet Radio]** > [Presets].
   ↳ The list of presets is displayed.

4 Press an alphanumeric button (0 to 9) to play the Internet radio station that is assigned to the preset of that number.

Save Internet radio stations to presets

This chapter shows how to save the currently playing Internet radio station to a preset.
Important: This action overwrites any other Internet radio station that was previously stored under the selected preset.

1 While you listen to Internet radio, press and hold an alphanumeric button (0 to 9) to save the current station to the preset of that number.
   ↳ The current station is saved under the selected preset number.

English

Mark radio stations as Favorites

You can mark Internet radio stations as your Favourites so next time you want to listen to a station, it is easy to find.

1 Turn on NP2900.
2 Ensure that NP2900 is connected to broadband Internet.
3 When you listen to Internet radio, press **FAVORITE** to mark the station.
   - Press **HOME** to go to the Home menu.
   - The next time you connect to the Internet radio, the radio station is shown in the Favorite Stations menu.

Note

- Internet radio features require broadband Internet access.

Tip

- You can also place bookmarks for Internet radio stations when you log on at **www.philips.com/welcome** and on the registered product site click the link **Streamium Management**.

Listen to Favorite Stations

When you place bookmarks for Internet radio stations, you can find them under Favorite Stations.

1 Turn on NP2900.
2 Ensure that NP2900 is connected to broadband Internet.
3 Press **INTERNET RADIO**.
4 Select **[Favorite stations]**.
5 Select the station.
   - Press **HOME** to go to the Home menu.

Note

- Internet radio features require broadband Internet access.

Remove a Favorite Station

You can remove Internet radio stations from your Favorites:

1 While listening to an Internet radio station that is bookmarked as a Favorite, press **FAVORITE**.
   ↳ The current station is removed from your list of Favorites.

Note

- Internet radio features require broadband Internet access.

Manually add Internet radio stations

This chapter explains how to register with Philips and add individual URL addresses for Internet radio stations on the PC.
The easiest way to register is to visit www.philips.com/welcome and follow the on-screen instructions to register NP2900.
Alternatively, you have the option to register NP2900 on the device:

1 Ensure that NP2900 is turned on.
2 Ensure that NP2900 is connected to the Internet.
3 On NP2900, select **[Settings]** > **[Register now]** > **[Register on the device]**.
   ↳ The registration display is shown.
4 Press alphanumeric buttons on the remote control to enter your valid email address.
5 Press **OK**.
   ↳ The display confirms the automated email dispatch to your mailbox.
6 Check the email inbox for a message from **ConsumerCare@Philips.com** with the subject **Your Streamium Registration...**.
7 Follow the instructions in the email to complete your registration process on the Philips website.

8 On the registered product site, click the link **Streamium Management**.

9 Select **My Media**.

10 Click on the tab **Music**.

11 Enter the URL address of Internet radio station in the first column.

12 Enter a nickname in the second column.
   ↳ The nickname is the Internet radio stations identification that is displayed NP2900.

13 Enter a description in the third column.

14 Click on **Save** to confirm your entries.

Note

- If the manually added Internet radio station is available and broadcast in a compatible format, you can listen to it on NP2900.
- You can find the manually added Internet radio stations in the My Media list on NP2900.
- Internet radio features require broadband Internet access.

Listen to My Media

When you manually add an Internet radio station, the Internet radio station is found under **[My Media]**.

1 Turn on NP2900.

2 Ensure that NP2900 is connected to broadband Internet.

3 Press **INTERNET RADIO**.

4 Select **[My Media]**.
   ↳ The display shows the list of Internet radio stations stored under **[My Media]**.

5 Press **OK** to start play.
   - To return to the Home menu, press **HOME**.

Note

- The feature **My Media** requires registration with **Club Philips**.
- Internet radio features require broadband Internet access.

Listen to Rhapsody® music services

Note

- This feature requires broadband Internet access.
- This feature requires a Rhapsody® account.
- This feature is only available in some regions.

Rhapsody® is an on-line music service that offers streaming on-demand access to its library of digital music. You can use this online service with NP2900.
Available features can include:

- **[My Library]** (built from your Rhapsody Music Library)
- **[Channels]** (lets you select virtual Internet radio channels with different genre options and other features)
- **[Search]** (lets you search for music in the Rhapsody Music Library)
- **[Music guide]** (guides you through the Rhapsody Music Services)
- **[My Rhapsody]** (lets you create and select your albums, dynamic playlists, ratings)
- **[Account management]** (helps you manage your Rhapsody Account)

1 Turn on NP2900.

2 Ensure that NP2900 is connected to broadband Internet.

3 Press **HOME**.

4 Select **[Rhapsody]**.

5 Follow the instructions that are displayed:
   - Rhapsody® instructions to select the services available to you.
   - **Account management** instructions to sign in with a full account.

6 Press ▲ or ▼, then **OK** to select.
   - Press **HOME** to go to the Home menu.

Note

- The on-line Rhapsody® services that are available depend on the type of account you hold.
- Rhapsody® and the Rhapsody logo are registered trademarks of RealNetworks, Inc.

Rate Rhapsody® music

You can use the remote control to rate the music of those music services that support rating.

1 While you navigate through Rhapsody® music on NP2900, press **+RATE –** to rate the current track in the display.
   ↳ The selected rating is indicated in stars.
   ↳ Press **HOME** to go to the Home menu.

Note

- The on-line Rhapsody® services that are available depend on the type of account you hold.

9 Settings

The following settings are available to you:

- **[Play mode]**
- **[Sound settings]**
- **[Display settings]**
- [Slideshow settings]
- **[Album art]**
- **[Clicker sound]**
- **[Alarm clock settings]**
- **[Network settings]**
- **[Clock settings]**
- **[Location and time zone]**
- **[Language]**
- **[Device ID and information]**
- **[User registration]**
- **[Check for software upgrades]**
- **[Demo mode]**
- **[Call centre numbers]**
- **[Restore factory settings]**
- [Legal]

This is how to navigate and select with the remote control:

- Press ▲ or ▼ to select a menu option.
- Press **OK** to confirm a selection.
- Press **BACK** ⮌ to go back to the previous screen.
- Press **HOME** to go to the Home menu.

This is how you change settings:

1 Turn on NP2900.
2 Press **SETTINGS**.
3 Select menu option and confirm.

Play mode

NP2900 offers play mode options that can be toggled with buttons on the remote control.

- Shuffle play
- Repeat play

You can also change the play mode options in the Settings menu:

1 Press **SETTINGS**, to go to the Settings menu.
2 Select
   - **[Repeat]** or
   - **[Shuffle]**.
3 Select your option and confim.

Sound settings

The sound settings of NP2900 offer the following options:

- LivingSound™
- FullSound™
- Equalizer
- Aux in volume

LivingSound

NP2900 offers a pre-configured sound setting called **LivingSound**™. The **LivingSound**™ feature enlarges the area in which stereo sound is heard, so that the listener need not sit directly in front of NP2900 to hear stereo sound.

1 Press **LIVINGSOUND** to toggle the **LivingSound**™ feature off and on (default).

Note

- The **LivingSound**™ feature is not supported with the use of headphones.

FullSound

NP2900 offers a pre-configured sound setting called **FullSound™**. The **FullSound™** feature restores sonic details to compressed music and provides a full sound experience without any distortion.

1 Press **FULLSOUND** to toggle the **FullSound™** feature off and on (default).

Equalizer settings

You can choose between the following equalizer options:

- **[FullSound]**
- **[Dynamic Bass Boost]**
- **[Rock]**
- **[Pop]**
- **[Jazz]**
- **[Classic]**
- **[Off]**

1 Press **SETTINGS**, to go to the Settings menu.

2 Select **[Sound settings]** > **[Equalizer]**.

3 Select a menu option and confirm.

Slideshow settings

The slideshow settings of NP2900 offer the following options:

- **[Shuffle]**
- **[Repeat]**
- [Time per slide]

Display settings

The display settings of NP2900 offer the following display illumination options:

- Brightness when NP2900 is turned on.
- Brightness when when NP2900 is switched to standby.

Brightness settings when NP2900 is turned on

You can choose between the following brightness 'when on' settings:

- **[Bright]**
- **[DIM]**

1 Press **SETTINGS**, to go to the Settings menu.

2 Select **[Brightness when on]**.

3 Select a menu option and confirm.

Brightness settings when NP2900 is switched to standby

You can choose between the following brightness 'when standby' settings:

- **[Bright]**
- **[DIM]**
- **[Off]**

1 Press **SETTINGS**, to go to the Settings menu.

2 Select **[Brightness when standby]**.

3 Select a menu option and confirm.

Aux in settings

The Aux in volume settings of NP2900 offer the following options:

- **[High]**
- **[Mid]**
- **[Low]**

Clicker sound

NP2900 can give you an audible feedback (clicker sound) every time you press a button on the remote control.
You can toggle the clicker sound on or off:

1 Press **SETTINGS**, to go to the Settings menu.
2 Select **[Clicker sound]**.
3 Highlight the option, then press **OK**.

Album art

NP2900 can display album art as a background or as a thumbnail in the music play screen.
Album art must be available to be displayed.
For albums without available album art, NP2900 displays a default icon.
You can toggle the album art display on or off:

1 Press **SETTINGS**, to go to the Settings menu.
2 Select **[Album art]**.
3 Highlight the option, then press **OK**.

Clock settings

NP2900 has a clock with alarm functions. The clock must be set for the alarm function to be functional.
This is how to set the clock:

1 Press **SETTINGS**, to go to the Settings menu.
2 Select **[Clock settings]** > **[Date and time]**, to enter the date and time settings.
3 You can select the following options:
   - **[Current date and time]** > **[Automatic (Internet)]**, to sync the time automatically via the Internet (requires Internet connection).
   - **[Current date and time]** > **[Manual]**, to set the time manually.

To set the date and time manually:

1 Press ▲ or ▼ to adjust the setting.
2 Press **OK** to confirm.
   In the date and time settings, you can set the following formats:

- **[Time format]** - Set your option in the time format sub-menu.
- **[Date format]** - Set your option in the date format sub-menu.
- **[Daylight saving time]** - Mark the box to select this option.
   ↳ When daylight saving time is selected, the clock is advanced by one hour for summertime setting.
   ↳ To return to wintertime and set the clock back by one hour, deselect this option.

Alarm settings

NP2900 has an alarm function. The clock must be set for the alarm function to be functional.
This is how to set the alarm:

1 Press **SETTINGS**, to go to the Settings menu.
2 Select **[Clock settings]** > **[Alarm]**, to enter the alarm settings.
3 You can select the following options:
   - **[Alarm off]** (default)
   - **[Music]**
   - **[Buzzer]**

To set the alarm time:

1 Press ▲ or ▼ to adjust the setting.
2 Press **OK** to confirm.

Network settings

You can choose between different setups. This manual explains the following options:

- Wireless network connection with automatic IP address
   This is the most common network setup.
   This setup requires the following:

    - A wireless access point or wireless router with broadband Internet access
    - Manual entry of your encryption key (for encrypted network connections only)
- Wireless network connection with static IP address
  This setup requires the following:
    - A wireless access point or wireless router with broadband Internet access
    - Manual entry of your IP address.
    - Manual entry of your encryption key (for encrypted network connections only)
- Wired (Ethernet) network connection with automatic IP address
  This setup requires the following:
    - A cable modem or PC with broadband Internet access and a free Ethernet port
    - An Ethernet cable (sold separately).
- Wired (Ethernet) network connection with static IP address
  This setup requires the following:
    - A cable modem or PC with broadband Internet access and a free Ethernet port
    - An Ethernet cable (sold separately).
    - Manual entry of your IP address.

Wireless connection with automatic IP address

This is how to navigate and select with the remote control:

- Press ▲ or ▼ to select a menu option.
- Press **OK** to confirm a selection.
- Press **BACK** ⮌ to go back to the previous screen.
- Press **HOME** to go to the Home menu.

  The alphanumeric buttons of the remote control are multi-function buttons:
- To select a number or an alphanumeric character, press a button once or repeatedly until you see the number or alphabetic character in the display of NP2900.
- To cycle through the alphanumeric characters that are available, press a button repeatedly.
- To delete the last character entry from the display, press **CLEAR**.
    - To delete the whole last line entry from the display, press and hold **CLEAR**.

  The onscreen display guides you through the process of connecting NP2900 to your home network and the Internet. This section describes the typical wireless setup with automatic IP address. You can also follow the onscreen prompts for advanced configurations that are not described in this manual.

1 Ensure that your network name and network password or encryption key are available.

2 Turn on your wireless access point or wireless router with broadband Internet access.

3 Turn on NP2900.

4 Press **SETTINGS**, to go to the Settings menu.

5 Select **[Wireless (WiFi)]** to start the network setup process.

- For wireless routers with Wi-Fi protection system (WPS) that supports push button configuration (PBC): On the router, press the WPS PBC push button to activate. On NP2900 press **OK** to confirm.)
- For wireless routers with Wi-Fi protection system (WPS) that supports a personal identification number (PIN): On NP2900 select WPS PIN, then enter the displayed PIN on the router.
- For other wireless routers:
  ↳ NP2900 searches for networks.

1 Select your network from the list of found networks and confirm.
   - Enter the encryption key (if required) and confirm.
   - NP2900 acquires the automatic IP address.
   - NP2900 shows the confirmation for the connection to the network.
   - NP2900 shows the prompt for the connection to the Internet.

2 Select **[Yes]** to connect to the Internet.
   ↳ NP2900 shows the confirmation for the connection to the Internet.

Note

- You can enter more than one encryption key. In this case, NP2900 prompts you to select the default encryption key.

Wireless connection with static IP address

This is how to navigate and select with the remote control:

- Press ▲ or ▼ to select a menu option.
- Press **OK** to confirm a selection.
- Press **BACK** ⮌ to go back to the previous screen.
- Press **HOME** to go to the Home menu.

The alphanumeric buttons of the remote control are multi-function buttons:

- To select a number or an alphanumeric character, press a button once or repeatedly until you see the number or alphabetic character in the display of NP2900.
- To cycle through the alphanumeric characters that are available, press a button repeatedly.
- To delete the last character entry from the display, press **CLEAR**.
   - To delete the whole last line entry from the display, press and hold **CLEAR**.

The onscreen display guides you through the process of connecting NP2900 to your home network and the Internet. This section describes the typical wireless setup with static IP address. You can also follow the onscreen prompts for advanced configurations that are not described in this manual.

1 Ensure that your network name and network password or encryption key are available.

2 Turn on your wireless access point or wireless router with broadband Internet access.

3 Turn on NP2900.

4 Press **SETTINGS**, to go to the Settings menu.

5 Select **[Wireless (WiFi)]** to start the network setup process.

- For wireless routers with Wi-Fi protection system (WPS) that supports push button configuration (PBC): On the router, press the WPS PBC push button to activate. On NP2900 press **OK** to confirm.)
- For wireless routers with Wi-Fi protection system (WPS) that supports a personal identification number (PIN): On NP2900 select WPS PIN, then enter the displayed PIN on the router.
- For other wireless routers:
   ↳ NP2900 searches for networks.

1 Select your network from the list of found networks and confirm.
   - Enter the encryption key (if required) and confirm.
   - NP2900 tries to acquire an automatic IP address.

2 Press **BACK** ⮌ to enter your IP address manually.

3 Enter your static IP address and confirm.
   ↳ NP2900 shows the confirmation for the connection to the network.

↳ NP2900 shows the prompt for the connection to the Internet.

4 Select **[Yes]** to connect to the Internet.
↳ NP2900 shows the confirmation for the connection to the Internet.

Note

- You can enter more than one encryption key. In this case, NP2900 prompts you to select the default encryption key.

Wired connection with automatic IP address

This is how to navigate and select with the remote control:

- Press ▲ or ▼ to select a menu option.
- Press **OK** to confirm a selection.
- Press **BACK** ⮌ to go back to the previous screen.
- Press **HOME** to go to the Home menu.

The alphanumeric buttons of the remote control are multi-function buttons:

- To select a number or an alphanumeric character, press a button once or repeatedly until you see the number or alphabetic character in the display of NP2900.
- To cycle through the alphanumeric characters that are available, press a button repeatedly.
- To delete the last character entry from the display, press **CLEAR**.
  - To delete the whole last line entry from the display, press and hold **CLEAR**.

The onscreen display guides you through the process of connecting NP2900 to your home network and the Internet. This section describes the typical wired setup with automatic IP address. You can also follow the onscreen prompts for advanced configurations that are not described in this manual.

1 Connect an Ethernet cable (sold separately) to the **ETHERNET** jack of NP2900 and the Ethernet jack of the wired router.

2 Ensure that the wired router is turned on and has broadband Internet access.

3 Turn on NP2900.

4 Press **SETTINGS**, to go to the Settings menu.

5 Select **[Wired (Ethernet)]** to start the network setup process.
↳ NP2900 acquires the automatic IP address.
↳ NP2900 shows the confirmation for the connection to the network.
↳ NP2900 shows the prompt for the connection to the Internet.

6 Select **[Yes]** to connect to the Internet.
↳ NP2900 shows the confirmation for the connection to the Internet.

Wired connection with static IP address

This is how to navigate and select with the remote control:

- Press ▲ or ▼ to select a menu option.
- Press **OK** to confirm a selection.
- Press **BACK** ⮌ to go back to the previous screen.
- Press **HOME** to go to the Home menu.

The alphanumeric buttons of the remote control are multi-function buttons:

- To select a number or an alphanumeric character, press a button once or repeatedly until you see the number or alphabetic character in the display of NP2900.
- To cycle through the alphanumeric characters that are available, press a button repeatedly.

- To delete the last character entry from the display, press **CLEAR**.
  - To delete the whole last line entry from the display, press and hold **CLEAR**.

The onscreen display guides you through the process of connecting NP2900 to your home network and the Internet. This section describes the typical wired setup with static IP address. You can also follow the onscreen prompts for advanced configurations that are not described in this manual.

1 Connect an Ethernet cable (sold separately) to the **ETHERNET** jack of NP2900 and the Ethernet jack of the wired router.

2 Ensure that the wired router is turned on and has broadband Internet access.

3 Turn on NP2900.

4 Press **SETTINGS**, to go to the Settings menu.

5 Select **[Wired (Ethernet)]** to start the network setup process.
   ↳ NP2900 tries to acquire an automatic IP address.
   ↳ Press **BACK** ⮌ to enter your IP address manually.

6 Enter your static IP address and confirm.
   ↳ NP2900 shows the confirmation for the connection to the network.
   ↳ NP2900 shows the prompt for the connection to the Internet.

7 Select **[Yes]** to connect to the Internet.
   ↳ NP2900 shows the confirmation for the connection to the Internet.

Location and time zone

This is how you can change the location and time zone settings of NP2900:

1 Press **SETTINGS**, to go to the Settings menu.

2 Select **[Location and time zone]**.

3 Select a menu option and confirm.
   ↳ NP2900 applies the new location and time zone settings.
   ↳ Press **BACK** ⮌ to go back to the previous screen.
   ↳ Press **HOME** to go to the Home menu.

Language

This is how you can change the language of the display:

1 Press **SETTINGS**, to go to the Settings menu.

2 Select **[Language]**.

3 Select a menu option and confirm.
   ↳ The display language changes to the new setting.
   ↳ Press **BACK** ⮌ to go back to the previous screen.
   ↳ Press **HOME** to go to the Home menu.

Register NP2900

Registration of NP2900 requires a valid email address and mailbox access.
This is how to navigate and select with the remote control:

- Press ▲ or ▼ to select a menu option.
- Press **OK** to confirm a selection.
- Press **BACK** ⮌ to go back to the previous screen.
- Press **HOME** to go to the Home menu.

The alphanumeric buttons of the remote control are multi-function buttons:

- To select a number or an alphanumeric character, press a button once or repeatedly until you see the number or alphabetic character in the display of NP2900.
- To cycle through the alphanumeric characters that are available, press a button repeatedly.
- To delete the last character entry from the display, press **CLEAR**.
  - To delete the whole last line entry from the display, press and hold **CLEAR**.

This is how you can register NP2900 with Philips:
The easiest way to register is to visit www.philips.com/welcome and follow the on-screen instructions to register NP2900.
Alternatively, you have the option to register NP2900 on the device:

1 Ensure that NP2900 is turned on.
2 Ensure that NP2900 is connected to the Internet.
3 On NP2900, select **[Settings]** > **[Register now]** > **[Register on the device]**.
   ↳ The registration display is shown.
4 Press alphanumeric buttons on the remote control to enter your valid email address.
5 Press **OK**.
   ↳ The display confirms the automated email dispatch to your mailbox.
6 Check the email inbox for a message from **ConsumerCare@Philips.com** with the subject **Your Streamium Registration...**.
7 Follow the instructions in the email to complete your registration process on the Philips website.

Unregister NP2900

This is how to navigate and select with the remote control:

- Press ▲ or ▼ to select a menu option.
- Press **OK** to confirm a selection.
- Press **BACK** ⮌ to go back to the previous screen.
- Press **HOME** to go to the Home menu.

This is how you can unregister NP2900 with Philips:

1 Press **SETTINGS**, to go to the Settings menu.
2 Select **[User registration]** > **[Unregister]**.
   ↳ NP2900 prompts you to confirm.
3 Confirm to unregister.
   ↳ The display shows a confirmation that NP2900 is unregistered with your email account.

Registration information

This is how you can check the registration status of NP2900:

1 Press **SETTINGS**, to go to the Settings menu.
2 Select **[User registration]** > **[Registration status]**.
   ↳ NP2900 shows the registration information.
   ↳ Press **BACK** ⮌ to go back to the previous screen.
   ↳ Press **HOME** to go to the Home menu.

Check for SW upgrades

This is how to navigate and select with the remote control:

- Press ▲ or ▼ to select a menu option.
- Press ▶ to confirm a selection.
  - Press **OK** to confirm an alphanumeric entry.
- Press **HOME** to go to the Home menu.

This is how you can check for software updates for NP2900:

1. Ensure that NP2900 is connected to the Internet.
2. Press **SETTINGS**, to go to the Settings menu.
3. Select **[Check for software upgrades]** and confirm.
   ↳ NP2900 checks for a new software version.
4. Read the information shown in the display of NP2900.

New software is available for NP2900:

1. Follow the instructions shown in the display to complete the update.
   ↳ NP2900 prompts you to accept the conditions and download of the software.
   ↳ NP2900 restarts after the update.

Note

- Mandatory updates do not require your acceptance or confirmation.

NP2900 already has the latest software installed:

- Press **BACK** ⮌ to go back to the previous screen.
  - Press **HOME** to go to the Home menu.

Information

This is how you can find information about NP2900:

1. Press **SETTINGS**, to go to the Settings menu.
2. Select **[Device ID and information]**.
3. Press **OK** to confirm.
   ↳ The device information is shown on the display of NP2900.
   ↳ Press **BACK** ⮌ to go back to the previous screen.
   ↳ Press **HOME** to go to the Home menu.

Demo mode

You can access the demo mode in the Settings menu:

1. Press **SETTINGS**, to go to the Settings menu.
2. Select **[Demo mode]**.
   ↳ The demo plays continuously until you exit the demo play.
3. To exit the demo play, press ⏻.

Tip

- You can start the demo play more quickly with the **DEMO** button on the remote control.

Call center numbers

This is how you can find the call center numbers:

1 Press **SETTINGS**, to go to the Settings menu.
2 Select **[Call centre numbers]**.
3 Press **OK** to confirm.
   ↳ The call center numbers are shown on the display of NP2900.
   ↳ Press **BACK** ⮌ to go back to the previous screen.
   ↳ Press **HOME** to go to the Home menu.

Restore factory settings

Caution

- The following procedure erases all custom settings and resets NP2900 to the original status as set by the factory.

This is how to restore the factory settings of NP2900:

1 Press **SETTINGS**, to go to the Settings menu.
2 Select **[Restore factory settings]**.
3 Select **[Yes]** to reconfirm.
   ↳ NP2900 restarts.
   ↳ The factory settings of NP2900 are restored.

Legal information

This is how you can find additional legal information about NP2900:

1 Press **SETTINGS**, to go to the Settings menu.
2 Select [Legal].
3 Press **OK** to confirm.
   ↳ The legal information is shown on the display of NP2900.
   ↳ Press **BACK** ⮌ to go back to the previous screen.
   ↳ Press **HOME** to go to the Home menu.

10 Maintenance

This chapter tells you how to care for NP2900.

Cleaning

Note

- Avoid moisture and abrasion.

1 Clean NP2900 only with a soft dry cloth.

11 Technical data

General

AC Power	Voltage information is printed on the back or the underside of NP2900.
DC Power	12 V / 3.5 A
Dimensions (w x h x d)	346.5 x 99 x 69 mm
Weight (net)	Main unit: ~ 1,48 kg

Power consumption

On	< 40 W
Standby (active)	< 4 W
ECO (passive) standby	< 1 W

Audio output

SPDIF	1x chinch (coax), 0.5 V, 75 Ω
Headphones	1x 3.5 mm jack 30 - 18,000 Hz 16 - 150 Ω
Signal to noise ratio (headphones)	typically 85 dBA (IEC)
Distortion (line out / headphones)	< 0.15 %

Audio input

Aux in (line in)	2x cinch
Input sensitivity	500 mV
Input impedance	> 10 kΩ

Loudspeakers

Power handling	Front speakers: 10 W (RMS) / 15 W (MPO) Side speakers: 6 W (RMS) / 9 W (MPO)
Impedance	Front speakers: 8 Ω Side speakers: 12 Ω
Sensitivity	Front speakers: 80 dB / 1 m / W Side speakers: 83 dB / 0.5 m / W
Dimensions	Front speakers: 2.56 inches Side speakers: 1.56 inches
Frequency response	Front speakers: 50 Hz - 16 kHz Side speakers: 500 Hz - 16 kHz

Wireless

Wireless standard	802.11g, backwards compatible to 802.11b
Wireless security	WEP (64 or 128 bit), WPA/WPA2 (8-63 characters) WPS-PBC WPS-PIN
Frequency range	2412 - 2462 MHz (CH1-CH11) (for /79, /37, /55, /97) 2412 - 2472 MHz (CH1-CH13) (for /12, /05)
Antenna	2x internal, diversity mode enabled

Wired (LAN / Ethernet)

Wired standard	802.3 / 802.3 u
Speed	10 / 100 MBit/s
Mode	half / full duplex
Crossover detection (Auto MDIX)	Yes (Auto MDIX)

Decoding capabilities

MP3	8 - 320 kbps (CBR / VBR)
WMA	32 - 192 kbps (CBR / VBR)
AAC (M4A)	16 - 320 kbps (CBR / VBR)
PCM	1x (1.4 Mbps)
FLAC	Supported
Ogg Vorbis	Supported
JPEG	Supported

Playlist support

*.m3u, *.wpl	Supported
iTunes	Supported (via by-packed software)

Picture format support

JPEG	Supported

Display / Clock

Resolution	Dot matrix 320 x 240 dots (QVGA) Color TFT
Size	3.5 inches
Backlight	On / Off / Dimmed
Time / Date display	Supported
Automatic time sync via Internet (NPT)	Supported
Sleep timer	Supported
Key sound feedback	Clicker (internal)

Specifications and external appearance are subject to change without notice.

Supported audio file formats

NP2900 supports the following audio file formats:

- MP3 (8-320kbps and VBR)
- WMA (up to 192kbps)
- non DRM protected AAC (M4A) (16-320 kbps and VBR16)
- PCM (1.4 Mbps)
- FLAC
- Ogg Vorbis

Note

- The display of NP2900 supports directories with nesting up to a maximum of 8 levels.

Supported picture file formats

NP2900 supports the following picture file formats:

- JPEG

Note

- The display of NP2900 supports directories with nesting up to a maximum of 8 levels.

Supplied accessories

- Remote control
- 2 AAA batteries
- CD-Rom
- AC power adapter with cable
- Wall mounting bracket

Computer connection requirements

The minimum requirements for computer connections are:

- Windows 2000 SP4 (or above) / XP SP2 / Vista / Mac
- Pentium III 500MHz processor or higher
- 256MB RAM
- CD-ROM drive
- Adapter
  - Ethernet enabled (for wired connection)
  - Wireless network 802.11 b/g (for wireless connection)
- 500MB free hard disk space

12 Troubleshooting

No network connection, what do I do?
During network connection setup, the player may have assigned a pre-defined IP address and tries to establish a network connection with this pre-defined IP address. (The player tries to establish a wireless or wired network connection, depending on the type of setup you initially selected.)
Possible reasons:
- The static IP address failed to register (for example if you press **HOME** or exit the setup process by other means before you have entered the correct static IP address).
- The automatic IP address failed to register automatically through DHCP server (for example if the automatic connection to the DHCP server failed and the player prompts you to enter a static IP address, but you press **HOME** or exit the setup process by other means before you have entered the correct static IP address).
Solution:
Follow the instructions in chapter 'Network settings' in this user manual to setup your network correctly. The 'Network settings' allow you to change between wireless and wired network connection.

I cannot hear any sound or the sound is poor, what do I do?
- Press **+ VOL -** to increase the volume.
- Press the **MUTE** button again to reactivate the sound output.

Is there a maximum distance of transmission between a wireless router and NP2900 for effective streaming?
Yes. The maximum distance of Wi-Fi transmission is 250m measured in open spaces. However, in a home environment, where solid obstacles such as walls and doors are present, the effective transmission distance is reduced to 50-100m. Reposition the devices if you experience transmission problems.

I have not received any registration email from ConsumerCare@Philips.com.
- Check that the email address that is entered in the user registration section is valid and spelled correctly.
- Check that the PC has an active Internet connection.
- The Internet server may be busy, try again later.
- Check if the email was redirected to the spam folder.

How do I avoid Wi-Fi interferences from other devices that operate in the same (2.4GHz) frequency spectrum, such as Dect phones or bluetooth devices?
- Move NP2900 at least 3m away from such devices.
- Use a WEP/WPA encryption key when you create the wireless connection your PC / home network.
- Change the operating channel on the interfering devices.
- Turn the devices in different directions to minimize interference.

13 Glossary

A

AAC (Advanced Audio Coding)
An audio compression scheme defined as part of the MPEG-2 standard (also known as MPEG-2 AAC or MPEG-2 NBC, or Not Backwards Compatible). It offers better sound and a compression ratio that is superior by roughly 30 percent compared to the MPEG-1 MP3 format.

AC (alternating current)
An alternating current is an electrical current whose magnitude and direction vary cyclically, as opposed to DC (direct current), whose direction remains constant. The usual waveform of an AC power circuit is a sine wave, as this results in the most efficient transmission of energy. However certain applications use different waveforms, such as triangular or square waves.

Album art
Album art is a feature that displays the artwork (cover picture) of a music album. This display enables the user to quickly identify a music album. The artwork files for music albums can be downloaded from the Internet.

Amplifier
A device, either a single stage or a large scale circuit with multiple stages for creating gain, i.e. it makes small signals larger.

Antenna
A device, such as a rod or wire, which picks up a received radio frequency signal or radiates a transmitted RF signal.

Audio output
High-level (speaker) or line-level (RCA) signals sent from one system component to another; or the high-level signal from an amplifier to the system speakers.

Aux in
Auxiliary input that allows you to connect portable audio devices.

B

Bass
The lowest three octaves of the audio band. Low bass is the bottom octave (20-40Hz), mid-bass is the middle octave (40-80Hz), and upper bass is the 80-160Hz octave.

Bit / bits
A bit is a binary digit, taking a value of either 0 or 1. For example, the number 10010111 is 8 bits long.

Bit rate
Bit rate is the number of bits that are conveyed or processed per unit of time. The bit rate is usually measured in some multiple of bits per second (kilobits per second: kbps). The term bit rate is a synonym for data transfer rate (or simply data rate).

C

CBR (constant bit rate)
With CBR the encoder spends the same amount of bits on each frame, regardless of how much it may really need. Disadvantage of CBR: Bits are wasted in case of absolute blackness of a picture or complete silence in an audio frame. And pictures or audio frames with a lot of elements may need those bits.

CD (Compact Disc)
Format developed by Phillips, Sony, and Pioneer for conveying music and data. CDs record information by deforming the inner metal foil on the disc with tiny micro pits burned in by a laser.

CDDB
A centralized database of CDs, CD tracks, and artists on the Web, now known as Gracenote. The audio player or burner program can log on to CDDB. It uploads the ID of the CD

being played, and then downloads the title, artist, and track list.

Coaxial
A single copper conductor, surrounded with a layer of insulation, covered by a surrounding copper shield and finally, an insulating jacket. An unbalanced transmission line with constant impedance. In audio, this type is commonly used for low level, line signals terminated in RCA connectors.

Compression
In audio terms, this is a process of temporarily or permanently reducing audio data for more efficient storage or transmission. A temporary reduction in file size is called 'non-lossy' compression, and no information is lost. A permanent reduction in file size (such as with MP3 files) is called 'lossy' compression, and involves discarding unnecessary information which is irretrievably lost.

D

DC (direct current)
Direct current or continuous current is the constant flow of electric charge. This is typically in a conductor such as a wire. In direct current, the electric charges flow in the same direction, distinguishing it from AC (alternating current).

Decibel (dB)
A unit of measure used to express relative difference in power or intensity of sound.

DHCP
DHCP stands for Dynamic Host Configuration Protocol. It is a protocol for assigning dynamic IP addresses to devices on a network.

Digital
A method to encode information using a binary code of 0s and 1s. Many wireless phones and networks use digital technology.

Digital Audio
Digital Audio is a sound signal that has been converted into numerical values. Digital sound can be transmitted through multiple channels. Analog sound can only be transmitted through two channels.

Duplex (half/full)
Full duplex is the ability to send and receive data simultaneously. Duplex is synonymous with full duplex. Example: when a modem operates in full-duplex mode, it can transmit data in two directions simultaneously. In half-duplex mode it can transmit data in two directions, but not simultaneously.

E

Encryption key
An encryption key is an alphanumeric series that enables data to be encrypted and then decrypted so it can be safely shared among members of a network.

F

Frequency
The property or condition of occurring at frequent intervals. In sound, this simply refers to the regular occurrence of compression and rarification of air that we experience as sound.

Frequency Response
Is the range of frequencies that a speaker reproduces, lowest frequency to the highest. While the optimal normal is 20-20,000 Hz (Hertz), the range of human hearing for individuals is often much more restricted. A good full-range speaker system however, reproduces as much of this range as possible to cover all variations. Individual drivers are limited to reproduce only that part of the spectrum for which they were made, so their response is limited, but still a necessary point to consider when designing a complete sound system.

FullSound
FullSound™ is an innovative technology designed by Philips. FullSound™ faithfully restores sonic details to compressed music, enhancing it to provide a full sound experience without any distortion.

H

Hz (Hertz)
Cycles per second, named after Heinrich Hertz.

I

Impedance
The resistance to the flow of an electric current in a circuit. This is effectively the electrical load that a loudspeaker presents to the amplifier which drives it and is measured in ohms.

Input sensitivity
SPL (sound pressure level) a speaker produces, given one watt of power, measured from a one-meter distance at a typical input frequency (usually 1kHz unless otherwise noted on the speaker).

Interface
A device or protocol which facilitates the linking of any two devices or systems; or when used as a verb ('to interface'), the process of linking.

IP address
An IP (Internet Protocol) address is a unique computer address that enables electronic devices to communicate with and identify each other.

K

Kbps
Kilobits per second. A digital-data-rate measurement system which is often used with highly compressed formats such as AAC, DAB, MP3 etc. The higher the amount, the better the quality generally is.

Kilo Hertz (kHz)
1000Hz or 1000 cycles per second.

L

LCD (Liquid Crystal Display)
Probably the most common way to show visual information on non-computer electronic equipment.

LivingSound
LivingSound™ is a sound processing algorithm provided by Philips that offers spatial enhancements and the listener perceives the sound as though the loudspeakers were located a greater than actual distance apart from one another.

Lossless compression
A system for reducing the number of data bits (density) in a musical signal without corrupting the original.

M

M4A
The audio file format used by Apple in their iTunes Music Store often appears on your system with the '.m4a' filename extension. M4A can produce better audio quality than MP3 using less physical space for the files.

MHz (Mega Hertz)
One million cycles per second.

Mono (monaural)
The operation of an amplifier in one channel for both input and output. Can refer to an amplifier with only one channel of amplification or operating in bridged mode. For low-frequency amplification applications, it provides better phase coherence and less distortion than stereo operation.

MP3
A file format with a sound data compression system. MP3 is the abbreviation of Motion Picture Experts Group 1 (or MPEG-1) Audio Layer 3. With the MP3 format, one CD-R or CD-RW can contain about 10 times more data than a regular CD.

Mute
A control found on receivers, and some mixers or signal processing units that silences (mutes) a signal path, or output.

O

Ohm
Measure of resistance to current (impedance). The lower the impedance of a speaker, the harder it is to drive.

P

PBC
The push button configuration (PBC) method is a router feature that allows connection by the push a button (actual or virtual).

PCM (Pulse Code Modulation)
Pioneering form of digital recording.

PIN
In Internet routing, the Personal Identification Number (PIN) method allows users to use a PIN to connect the router.

R

RF (radio frequency)
An alternating current or voltage with a frequency (or carrier wave) above about 100kHz. It is called radio frequency because these frequencies have a capacity to be radiated as electromagnetic waves by radio (and television) stations.

Rhapsody®
Rhapsody® is an on-line music service that offers streaming on-demand access to its library of digital music.

S

S/PDIF (SPDIF) (Sony/Philips Digital Interface)
A standard audio-file transfer-format that was developed jointly by Sony and Philips. S/PDIF allows the transfer of digital audio signals from one device to another, without the need to convert first to analog. This prevents the quality of the digital signal degrading during transfer to analog.

Sensitivity
Volume that a speaker offers for a specific voltage input, expressed in decibels per watt (dB/W).

Shuffle
A feature that plays audio files (tracks) in random order.

Signal to noise ratio
Represents the difference between the level of the audio signal, and any interference. The larger the figure, the purer the sound.

SPL (sound pressure level)
An acoustic measurement of sound energy. 1 dB SPL is the smallest increment in sound level to which the average human is sensitive. Theoretically, 0 dB SPL is the threshold of human hearing while approximately 120 dB is the threshold of pain.

Stereo
Literally means solid. Usually taken to refer to two channel stereo, though developments in digital audio facilitate multichannel stereo.

Streaming
A technique for transferring data such that it can be processed as a steady and continuous stream. Streaming technologies are often used on the Internet because many users do not have fast enough access to download large

multimedia files quickly, so the client browser or plug-in can start displaying the data before the entire file has been transmitted.

SuperPlay
SuperPlay™ is a special feature of the product, which enables the listener to play all the music under a top-level library category, such as artists or albums, without having to select playlist items.

SuperScroll
SuperScroll™ is a navigation feature of the double-action search keys of the product. SuperScroll™ allows easy speed control when scrolling through large libraries to swiftly find items within large libraries. Longer press of the button results in faster scroll speed.

T

Thumbnail
A thumbnail is reduced-size versions of a picture that is used to make it easier to recognize an them. Thumbnails serve the same role for images as a normal text index does for words.

U

UPnP (Universal Plug and Play)
Universal Plug and Play is a networking architecture developed by a consortium of companies to ensure easy connectivity between products from different vendors. UPnP devices should be able to connect to a network automatically, handling identification and other processes on the fly. The standards developed by the UPnP Forum are media-, platform-, and device-independent.

V

VBR (variable bit rate)
With VBR, the encoder takes as much bits as it needs. So black pictures get few bits and complex pictures get as much as they need. While this provides the best quality the final size cannot be predicted at all.

Volume
Volume is the most common word used to specify the control of relative loudness of sounds. It also pertains to the function on many electronic devices that is used to control the loudness.

W

W (wattage)
A measurement of power. In speakers, wattage is a term that indicates power-handling characteristics in dealing with electrical voltage inputs from the amplifier.

WAP (Wireless Application Protocol)
Global protocol used in some wireless devices that allows the user to view and interact with data services. Generally used as a means to view Internet web pages using the limited transmission capacity and small display screens of portable wireless devices.

WAV
A format for sound files developed jointly by Microsoft and IBM. Built into Windows 95 to XP, which made it the de facto standard for sound on PCs. WAV sound files end with a '.wav' extension and works with nearly all Windows applications that support sound.

WEP (Wired Equivalent Privacy)
All 802.11b (Wi-Fi / wireless) networks use WEP as their basic security protocol. WEP secures data transmissions using 64-bit or 128-bit encryption; however, it does not offer complete security and is usually used in conjunction with other security measures such as EAP.

Wi-Fi
Wi-Fi (Wireless Fidelity) is a wireless technology brand owned by the Wi-Fi Alliance intended to improve the interoperability of wireless local area network products based on the IEEE 802.11 standards. Common

applications for Wi-Fi include Internet and VoIP phone access, gaming, and network connectivity for consumer electronics such as televisions, DVD players, and digital cameras.

Wireless
Telecommunications using electromagnetic waves rather than wires or cable to transmit information. Wireless communication can be used for free-ranging mobile systems such as cell phones and global positioning systems (GPS), which use satellite technology. Wireless systems can also be fixed, such as LANs that provide wireless communications within a limited area (such as an office), or wireless peripherals such as mice and keyboards.

WMA (Windows Media Audio)
An audio format owned by Microsoft, is a part of Microsoft Windows Media technology. Includes Microsoft Digital Rights Management tools, Windows Media Video encoding technology, and Windows Media Audio encoding technology.

WPA / WPA2 (Wi-Fi Protected Access)
A Wi-Fi standard that was designed to improve upon the security features of WEP. The technology is designed to work with existing Wi-Fi products that have been enabled with WEP (i.e. as a software upgrade to existing hardware), but the technology includes two improvements over WEP.

WPS
Wi-Fi Protected Setup (WPS) is a standard for easy and secure establishment of a wireless home network. The goal of the WPS protocol is to simplify the process of configuring security on wireless networks.

14 Contact information

Argentina	(54-11) 4544-2047
Australia	1300 363 391
Austria	0810 000 205
Belgium	78250145
Belarus	882000110068
Brazil	0800 701 02 03 (all except Sao Paulo)(11) 2121-0203 (Sao Paulo only)
Bulgaria	8001154424
Canada	1-888-744-5477
Chile	600 744 5477 (600-PHILIPS)
China	4008 800 008
Colombia	01 800 700 7445
Croatia	800222778
Czech Republic	800142840
Denmark	35258759
Estonia	8000100288
Finland	923113415
France	805025510
Germany	8000007520
Greece	80031221280
Hong Kong	852-2619 9663
Hungary	680018189
India	1860-180-1111
Ireland	16011777
Israel	9600900-09
Italy	800088774
Japan	0570-07-6666
Korea	080-600-6600
Latvia	80002794
Luxembourg	4066615644
Malaysia	1800 880 180
Mexico	01 800 504 6200
Netherlands	8000230076
New Zealand	0800 658 224
Norway	22708111
Pakistan	051 580 902-3
Peru	0800 00100
Philippines	(63 2) 667 9000
Poland	8003111318
Portugal	800780903
Romania	800894910
Russia Federation	(495)961-1111 (local rate)8-800-200-0880 (mobile phone - free)
Singapore	65 6882 3999
Slovakia	800004537
South Africa	(011) 471-5194
Spain	900800655
Sweden	857929100
Switzerland	844800544
Taiwan	0800 231 099
Thailand	66 2 652 8652
Turkey	0800 261 3302
Ukraine	8-800-500-69-70
United Kingdom	8003316015
United States	1-888-744-5477
Uruguay	(598-2) 619 6666
Venezuela	0800 100 4888

Streamium terms and conditions

Terms and Conditions of Use of your Philips Streamium-enabled Device
Congratulations on your purchase of a Philips Streamium-enabled Device ("Device"). These Terms and Conditions of Use give you the rights to use certain features on your Device relating to the streaming of content. You must agree to these Terms and Conditions of Use before using the Device. Your use of the Device constitutes your agreement to be bound by these Terms and Conditions of Use and will give you the right to access these features. If you do not agree to these Terms and Conditions of Use, you may return your Device to the point of purchase. These Terms and Conditions of Use supplement, and do not replace, any terms, conditions or disclaimers which were provided with your purchase of the Device. All such terms, conditions and disclaimers remain in full force and effect.

Eligibility for Registration.
You must be at least 14 years of age to assume the responsibilities of these Terms and Conditions of Use. If you are under 14 years of age, you may not use the Device unless one of your parents or legal guardians assumes the responsibilities of these Terms and Conditions of Use. Your use of the Device constitutes your representation that you are either 14 years of age or, if you are under 14 years of age, that your parent or legal guardian has assumed the responsibilities of these Terms and Conditions of Use.

Restrictions on Modification of your Device
Your Device provides access to certain streams of content. As a condition of obtaining access to those streams through the Device, you agree not to tamper with or otherwise modify or attempt to modify the Device in any way (including through the use of software or by making physical alterations to the Device). You agree that you will not circumvent or attempt to circumvent technological measures employed to control access to, or the rights in, any content. You agree that you will not circumvent or attempt to circumvent any copy management system by any means. You agree that you will not decipher or attempt to decipher cryptographic keys or otherwise defeat or attempt to defeat any security features implemented in the Device or in the content streams. You agree that you will not use the Device for any unauthorized purpose or in contravention of any law or regulation.

Disclaimers Regarding Content
The streams of content which are accessible through your Device are not controlled or programmed by Philips. Rather, they are provided by third parties. Think of your Device (in addition to its other features) as a form of "tuner" which allows you to receive the content broadcast by many others outside of your local area. Since the content is provided by others, PHILIPS HAS NO EDITORIAL CONTROL OVER ANY OF THAT CONTENT RECEIVED THROUGH YOUR DEVICE AND, THEREFORE IS NOT LIABLE FOR CONTENT OR ITS NATURE OR DELIVERY. PHILIPS DOES NOT ENDORSE ANY OPINIONS EXPRESSED IN ANY CONTENT RECEIVED THROUGH YOUR DEVICE. PHILIPS DOES NOT GUARANTEE THE TRUTHFULNESS, ACCURACY, RELIABILITY, COMPLETENESS OR TIMELINESS OF CONTENT. YOU AGREE THAT ANY RELIANCE ON CONTENT IS AT YOUR OWN RISK.

Limitations on Access to Streams.
Philips does not guarantee access to any particular stream or to the content contained in any stream. Philips may, in its discretion, add or remove access to any specific stream or content at any time. Some streams are accessible through arrangements with online service providers which determine which streams are listed on their directories. Although Philips will strive to provide a good selection of online service providers, Philips does not guarantee continued access to any specific online service provider. Philips may, in its discretion, add or remove access to any specific online service provider.

Rights in Content
Content may be protected by copyright laws or other intellectual property or proprietary laws. In some situations, such as use of the Device in a commercial environment, it may be necessary for you to obtain, at your own risk, a license or other authorization to use such content. You agree that, in the event such a license

or authorization is necessary, it is your responsibility to obtain any such license or authorization. You agree that you are solely liable for any damages you may incur resulting from your failure to obtain the proper license or authorization for use of the content accessible through the Device. You agree that Philips will have no liability to you with regard to your use of the content.

Changes in Features
Philips may, in its discretion, change the features of the Device, including adding features to, or removing features from, the Device. Some new features may require changes to these Terms and Conditions of Use. Your use of those new features will constitute your agreement to the revised Terms and Conditions of Use.

Software and Intellectual Property Rights
You may need to use certain software programs to use or have full access to certain features of the Device. You received certain software with the purchase of the Device and may receive other software from time to time in the future. Most of that software is contained in the Device and is not accessible to you. Some of that software is owned by Philips and some is owned by others. Your use of software owned by Philips is subject to these Terms and Conditions of Use and any applicable license agreement. Your use of software owned by others is governed by their applicable license agreements. Your use of software does not transfer any title or ownership rights in the software to you. Philips retains all its rights in software and other intellectual property, including copyrights, patent rights, and rights in its trademarks and trade names. You agree that you will not disassemble, decompile, create derivative works of, reverse engineer, modify, sublicense, distribute the software or use the software for any unauthorized purpose or in contravention of any law or regulation.

Warranty Disclaimer
PHILIPS MAKES NO REPRESENTATION OR WARRANTY, EXPRESS OR IMPLIED, THAT THE DEVICE WILL MEET YOUR REQUIREMENTS OR THAT THE USE OF THE DEVICE WILL BE UNINTERRUPTED, TIMELY, SECURE OR FREE FROM ERRORS. PHILIPS MAKES NO WARRANTY AS TO THE CONTENT CARRIED IN ANY STREAM. PHILIPS MAKES NO REPRESENTATION OR WARRANTY, EXPRESS OR IMPLIED, AS TO THE INFORMATION OR CONTENT ACCESSED THROUGH YOUR DEVICE OR TO YOUR RELIANCE ON, OR USE OF, ANY INFORMATION OR CONTENT ACCESSED THROUGH YOUR DEVICE. SPECIFIC WARRANTIES WERE PROVIDED WITH YOUR PURCHASE OF YOUR DEVICE AND THOSE WARRANTIES, INCLUDING ANY DISCLAIMERS TO THOSE WARRANTIES, CONTINUE TO APPLY. Because some jurisdictions do not permit the disclaimer of implied warranties, such disclaimers may not apply to you.

Limitation of Liability
PHILIPS WILL NOT BE LIABLE TO YOU OR TO ANY OTHER PARTY FOR ANY INDIRECT, INCIDENTAL, PUNITIVE, SPECIAL OR CONSEQUENTIAL DAMAGES (INCLUDING LOST PROFITS OR LOST SAVINGS) OR FOR LOSS OF DATA OR BUSINESS INTERRUPTION ARISING OUT OF OR RELATING TO YOUR USE OF THE DEVICE WHETHER OR NOT SUCH DAMAGES ARE BASED ON TORT, WARRANTY, CONTRACT OR ANY OTHER LEGAL THEORY - EVEN IF PHILIPS HAS BEEN ADVISED, OR IS AWARE, OF THE POSSIBILITY OF SUCH DAMAGES. IN NO EVENT WILL PHILIPS CUMULATIVE LIABILITY FOR DAMAGE (FROM ANY CAUSE WHATSOEVER) EXCEED THE AMOUNT YOU PAID FOR YOUR DEVICE.

Miscellaneous
"This agreement will be governed by the laws of the jurisdiction in which the Device was sold and you hereby consent to the non-exclusive jurisdiction of courts in the relevant country. If any provision of this agreement is invalid or unenforceable under applicable law, such provision will be deemed modified to the extent necessary to render such provision valid and enforceable and the other provisions of this agreement will remain in full force and effect. These Terms and Conditions of Use will not be governed by the United Nations Convention of Contracts for the International Sale of Goods, the application of which is hereby expressly waived."

BY USING YOUR DEVICE, YOU REPRESENT THAT YOU HAVE READ AND UNDERSTOOD THESE TERMS AND CONDITIONS OF USE AND THAT YOU ACCEPT THEM.

NOTICE

SOFTWARE END USER LICENSE AGREEMENT

THIS SOFTWARE END USER LICENSE AGREEMENT ("THIS AGREEMENT") IS A LEGAL AND BINDING AGREEMENT BETWEEN YOU (EITHER AN INDIVIDUAL OR ENTITY) AND PHILIPS CONSUMER ELECTRONICS B.V. A DUTCH LIMITED LIABILITY COMPANY, WITH ITS PRINCIPAL OFFICE AT GLASLAAN 2, 5616 LW EINDHOVEN, THE NETHERLANDS AND ITS SUBSIDIARY COMPANIES (INDIVIDUALLY AND COLLECTIVELY "PHILIPS"). THIS AGREEMENT GIVES YOU THE RIGHT TO USE CERTAIN SOFTWARE (THE "SOFTWARE") INCLUDING USER DOCUMENTATION IN ELECTRONIC FORM WHICH MAY HAVE BEEN PROVIDED SEPARATELY OR TOGETHER WITH A PHILIPS PRODUCT (THE "DEVICE") OR A PC. BY DOWNLOADING, INSTALLING OR OTHERWISE USING THE SOFTWARE, YOU ACCEPT AND AGREE TO BE BOUND BY ALL OF THE TERMS AND CONDITIONS OF THIS AGREEMENT. IF YOU DO NOT AGREE TO THESE TERMS AND CONDITIONS, DO NOT DOWNLOAD, INSTALL OR OTHERWISE USE THE SOFTWARE. IF YOU ACQUIRED THE SOFTWARE IN TANGIBLE MEDIA E.G. CD WITHOUT THE OPPORTUNITY TO REVIEW THIS LICENSE AND DO NOT ACCEPT THESE TERMS, YOU MAY RECEIVE A FULL REFUND OF THE AMOUNT, IF ANY, THAT YOU PAID FOR THE SOFTWARE IF YOU RETURN THE SOFTWARE UNUSED WITH PROOF OF PAYMENT WITHIN 30 DAYS FROM THE DATE OF PURCHASE.

1. Grant of License. This Agreement grants you a non-exclusive, nontransferable, non-sub licensable license to install and use, on the Device or a PC, as applicable, one (1) copy of the specified version of the Software in object code format as set out in the user documentation solely for your personal use. The Software is "in use" when it is loaded into the temporary or permanent memory (i.e. RAM, hard disk, etc.) of the PC or the Device.

2. Ownership. The Software is licensed and not sold to you. This Agreement grants you only the right to use the Software, but you do not acquire any rights, express or implied, in the Software other than those specified in this Agreement. Philips and its licensors retain all right, title, and interest in and to the Software, including all patents, copyrights, trade secrets, and other intellectual property rights incorporated therein. The Software is protected by copyright laws, international treaty provisions, and other intellectual property laws. Therefore, other than as expressly set forth herein, you may not copy the Software without prior written authorization of Philips, except that you may make one (1) copy of the Software for your back-up purposes only. You may not copy any printed materials accompanying the Software, nor print more than one (1) copy of any user documentation provided in electronic form, except that you may make one (1) copy of such printed materials for your back-up purposes only.

3. License Restrictions. Except as provided otherwise herein, you shall not rent, lease, sublicense, sell, assign, loan, or otherwise transfer the Software. You shall not, and you shall not permit any third party, to reverse engineer, decompile, or disassemble the Software, except to the extent that applicable law expressly prohibits the foregoing restriction. You may not remove or destroy any product identification, copyright notices, or other proprietary markings or restrictions from the Software. All titles, trademarks, and copyright and restricted rights notices shall be reproduced on your back up copy of the Software. You may not modify or adapt the Software, merge the Software into another program or create derivative works based upon the Software.

4. Termination of certain functionality. The Software may contain components of certain licensed software including software licensed from Microsoft Corporation ("Microsoft") which implements Microsoft's digital rights management technology for Windows Media. Content providers are using the digital rights management technology for Windows Media ("WM-DRM") to protect the integrity of their content ("Secure Content") so that their intellectual property, including copyright, in such content is not misappropriated. Your Device may also use WM-DRM software to transfer or play Secure Content ("WM-DRM Software"). If the

security of such WM-DRM Software is compromised, Microsoft may revoke (either on its own or upon the request of the owners of Secure Content ("Secure Content Owners")) the WM-DRM Software's right to acquire new licenses to copy, store, transfer, display and/or play Secure Content. Revocation does not alter the WM-DRM Software's ability to play unprotected content. A list of revoked WM-DRM Software is sent to your PC and/or your Device whenever you download a license for Secure Content. Microsoft may, in conjunction with such license, also download revocation lists onto your Device on behalf of Secure Content Owners, which may disable your Device's ability to copy, store, display, transfer, and/or play Secure Content. Secure Content Owners may also require you to upgrade some of the WM-DRM components distributed with this Software ("WM-DRM Upgrades") before accessing their content. When you attempt to play Secure Content, WM-DRM Software built by Microsoft will notify you that a WM-DRM Upgrade is required and then ask for your consent before the WM-DRM Upgrade is downloaded. WM-DRM Software built by Philips may do the same. If you decline the upgrade, you will not be able to access Secure Content that requires the WM-DRM Upgrade; however, you will still be able to access unprotected content and Secure Content that does not require the upgrade. WM-DRM features that access the Internet, such as acquiring new licenses and/or performing a required WM-DRM Upgrade, can be switched off. When these features are switched off, you will still be able to play Secure Content if you have a valid license for such content already stored on your Device. However, you will not be able to use certain of the WM-DRM Software features that require Internet access such as the ability to download content that requires the WM-DRM Upgrade. All title and intellectual property rights in and to the Secure Content is the property of the respective Secure Content owners and may be protected by applicable copyright or other intellectual property laws and treaties. This Agreement grants you no rights to use such Secure Content. **To summarize, if the Software contains Microsoft WM-DRM components – Secure Content you desire to download, copy, store, display, transfer, and/or play is protected by the Microsoft WM-DRM components of the Software. Microsoft, Secure Content Owners, or Secure Content distributors may deny you access, or restrict your access, to Secure Content even after you have paid for, and/or obtained, it. Neither your consent nor the consent or approval of Philips is necessary for any of them to deny, withhold or otherwise restrict your access to Secure Content. Philips does not guaranty that you will be able to download, copy, store, display, transfer, and/or play Secure Content.**

5. Open Source Software. (a) This software may contain components that are subject to open-source terms, as stated in the documentation accompanying the Device. This Agreement does not apply to this software as such. (b) Your license rights under this Agreement do not include any right or license to use, distribute or create derivative works of the Software in any manner that would subject the Software to Open Source Terms. "Open Source Terms" means the terms of any license that directly or indirectly (1) create, or purport to create, obligations for Philips with respect to the Software and/or derivative works thereof; or (2) grant, or purport to grant, to any third party any rights or immunities under intellectual property or proprietary rights in the Software or derivative works thereof.

6. Termination. This Agreement shall be effective upon installation or first use of the Software and shall terminate (i) at the discretion of Philips, due to your failure to comply with any term of this Agreement; or (ii) upon destruction of all copies of the Software and related materials provided to you by Philips hereunder. Philips's rights and your obligations shall survive the termination of this Agreement.

7. Upgrades. Philips may, at its sole option, make upgrades to the Software available by general posting on a website or by any other means or methods. Such upgrades may be made available pursuant to the terms of this Agreement or the release of such upgrades to you may be subject to your acceptance of another agreement.

8. Support Services. Philips is not obligated to provide technical or other support ("Support Services") for the Software. If Philips does provide you with Support Services, these will be governed by separate terms to be agreed between you and Philips.

9. Limited Software Warranty. Philips provides the Software 'as is' and without any warranty except that the Software will perform substantially in accordance with the documentation accompanying the Software for a period of one year after your first download, installation or use of the Software, whichever occurs first. Philips' entire liability and your exclusive remedy for breach of this warranty shall be, at Philips' option, either (i) return of the price paid by you for the Software (if any); or (b) repair or replacement of the Software that does not meet the warranty set forth herein and that is returned to Philips with a copy of your receipt. This limited warranty shall be void if failure of the Software has resulted from any accident, abuse, misuse or wrongful application. Any replacement Software will be warranted for the remainder of the original warranty period or thirty (30) days, whichever is longer. This limited warranty shall not apply to you if theif the Software was provided to you free of charge on an evaluation only basis.

10. NO OTHER WARRANTIES. EXCEPT AS SET FORTH ABOVE, PHILIPS AND ITS LICENSORS DO NOT WARRANT THAT THE SOFTWARE WILL OPERATE ERROR FREE OR UNINTERRUPTED, OR WILL MEET YOUR REQUIREMENTS. YOU ASSUME ALL RESPONSIBILITIES FOR SELECTION OF THE SOFTWARE TO ACHIEVE YOUR INTENDED RESULTS, AND FOR THE INSTALLATION OF, USE OF, AND RESULTS OBTAINED FROM THE SOFTWARE. TO THE MAXIMUM EXTENT PERMITTED BY APPLICABLE LAW, PHILIPS AND ITS LICENSORS DISCLAIM ALL WARRANTIES AND CONDITIONS, WHETHER EXPRESS OR IMPLIED, INCLUDING BUT NOT LIMITED TO THE IMPLIED WARRANTIES OF MERCHANTABILITY, FITNESS FOR A PARTICULAR PURPOSE, AND ACCURACY OR COMPLETENESS OF RESULTS WITH RESPECT TO THE SOFTWARE AND THE ACCOMPANYING MATERIALS. THERE IS NO WARRANTY AGAINST INFRINGEMENT. PHILIPS DOES NOT WARRANT THAT YOU WILL BE ABLE TO DOWNLOAD, COPY, STORE, DISPLAY, TRANSFER, AND/OR PLAY SECURE CONTENT.

11. LIMITATION OF LIABILITY. UNDER NO CIRCUMSTANCES WILL PHILIPS OR ITS LICENSORS BE LIABLE FOR ANY CONSEQUENTIAL, SPECIAL, INDIRECT, INCIDENTAL OR PUNITIVE DAMAGES WHATSOEVER, INCLUDING, WITHOUT LIMITATION, DAMAGES FOR LOSS OF PROFITS OR REVENUES, BUSINESS INTERRUPTION, LOSS OF BUSINESS INFORMATION, LOSS OF DATA, LOSS OF USE OR OTHER PECUNIARY LOSS, EVEN IF PHILIPS OR ITS LICENSORS HAVE BEEN ADVISED OF THE POSSIBILITY OF SUCH DAMAGES. IN NO EVENT SHALL PHILIPS' OR ITS LICENSORS' AGGREGATE LIABILITY FOR DAMAGES ARISING OUT OF THIS AGREEMENT EXCEED THE GREATER OF THE PRICE ACTUALLY PAID BY YOU FOR THE SOFTWARE OR FIVE TEN POUNDS STERLINGUS DOLLARS (510.00).

12. Trademarks. Certain of the product and Philips names used in this Agreement, the Software, and the printed user documentation may constitute trademarks of the Philips, its licensors or other third parties. You are not authorized to use any such trademarks.

13. Export Administration. You agree that you will not directly or indirectly, export or re-export the Software to any country for which the United States Export Administration Act, or any similar United States law or regulation requires an export license or other U.S. Government approval, unless the appropriate export license or approval has first been obtained. By downloading or installing the Software you agree to abide by this Export provision.

14. Governing law. This Agreement is governed by the laws of your country of residence ,residence, without reference to its conflict of laws principles. Any dispute between you and Philips regarding this Agreement shall be subject to the non-exclusive jurisdiction of the courts of your country of residence.-

15. General. This Agreement contains the entire agreement between you and Philips and supersedes any prior representation, undertaking or other communication or advertising with respect to the Software and user documentation. If any part of this Agreement is held invalid, the remainder of this Agreement will continue in full force and effect. This Agreement shall not prejudice the statutory rights of any party dealing as a consumer.

This product uses following open source software component under their relevant license terms:

Component	License Type	Location
uClinux distribution	GPL + LGPL	http://blackfin.uclinux.org
FLAC	GPL + BSD	http://flac.sourceforge.net
OGG	GPL + BSD	http://www.vorbis.com

Philips Electronics Hong Kong Ltd. hereby offers to deliver or make available, upon request, for a charge no more than the cost of physically performing source distribution, a machine-readable copy of the corresponding source code of the Library on a medium customarily used for software interchange.

Please contact:

Head of Development
BLC Audio PDCC Development
5/F., Philips Electronics Building
5 Science Park East Avenue
Hong Kong Science Park
Shatin Hong Kong

This offer is valid for a period of three years after the date of purchase of this product.

Credits:

libcurl Copyright (c) 1996 - 2009, Daniel Stenberg, daniel@haxx.se

Copyright and License:

FLAC Copyright

```
Copyright (C) 2000,2001,2002,2003,2004,2005,2006,2007,2008,2009  Josh Coalson

Redistribution and use in source and binary forms, with or without
modification, are permitted provided that the following conditions
are met:

- Redistributions of source code must retain the above copyright
notice, this list of conditions and the following disclaimer.

- Redistributions in binary form must reproduce the above copyright
notice, this list of conditions and the following disclaimer in the
documentation and/or other materials provided with the distribution.

- Neither the name of the Xiph.org Foundation nor the names of its
contributors may be used to endorse or promote products derived from
this software without specific prior written permission.

THIS SOFTWARE IS PROVIDED BY THE COPYRIGHT HOLDERS AND CONTRIBUTORS
```

``AS IS'' AND ANY EXPRESS OR IMPLIED WARRANTIES, INCLUDING, BUT NOT LIMITED TO, THE IMPLIED WARRANTIES OF MERCHANTABILITY AND FITNESS FOR A PARTICULAR PURPOSE ARE DISCLAIMED. IN NO EVENT SHALL THE FOUNDATION OR CONTRIBUTORS BE LIABLE FOR ANY DIRECT, INDIRECT, INCIDENTAL, SPECIAL, EXEMPLARY, OR CONSEQUENTIAL DAMAGES (INCLUDING, BUT NOT LIMITED TO, PROCUREMENT OF SUBSTITUTE GOODS OR SERVICES; LOSS OF USE, DATA, OR PROFITS; OR BUSINESS INTERRUPTION) HOWEVER CAUSED AND ON ANY THEORY OF LIABILITY, WHETHER IN CONTRACT, STRICT LIABILITY, OR TORT (INCLUDING NEGLIGENCE OR OTHERWISE) ARISING IN ANY WAY OUT OF THE USE OF THIS SOFTWARE, EVEN IF ADVISED OF THE POSSIBILITY OF SUCH DAMAGE.

OGG Copyright

Copyright (c) 2002-2008 Xiph.org Foundation

Redistribution and use in source and binary forms, with or without modification, are permitted provided that the following conditions are met:

- Redistributions of source code must retain the above copyright notice, this list of conditions and the following disclaimer.

- Redistributions in binary form must reproduce the above copyright notice, this list of conditions and the following disclaimer in the documentation and/or other materials provided with the distribution.

- Neither the name of the Xiph.org Foundation nor the names of its contributors may be used to endorse or promote products derived from this software without specific prior written permission.

THIS SOFTWARE IS PROVIDED BY THE COPYRIGHT HOLDERS AND CONTRIBUTORS ``AS IS'' AND ANY EXPRESS OR IMPLIED WARRANTIES, INCLUDING, BUT NOT LIMITED TO, THE IMPLIED WARRANTIES OF MERCHANTABILITY AND FITNESS FOR A PARTICULAR PURPOSE ARE DISCLAIMED. IN NO EVENT SHALL THE FOUNDATION OR CONTRIBUTORS BE LIABLE FOR ANY DIRECT, INDIRECT, INCIDENTAL, SPECIAL, EXEMPLARY, OR CONSEQUENTIAL DAMAGES (INCLUDING, BUT NOT LIMITED TO, PROCUREMENT OF SUBSTITUTE GOODS OR SERVICES; LOSS OF USE, DATA, OR PROFITS; OR BUSINESS INTERRUPTION) HOWEVER CAUSED AND ON ANY THEORY OF LIABILITY, WHETHER IN CONTRACT, STRICT LIABILITY, OR TORT (INCLUDING NEGLIGENCE OR OTHERWISE) ARISING IN ANY WAY OUT OF THE USE OF THIS SOFTWARE, EVEN IF ADVISED OF THE POSSIBILITY OF SUCH DAMAGE.

GNU GENERAL PUBLIC LICENSE

Version 2, June 1991

Copyright (C) 1989, 1991 Free Software Foundation, Inc.,
51 Franklin Street, Fifth Floor, Boston, MA 02110-1301 USA
Everyone is permitted to copy and distribute verbatim copies
of this license document, but changing it is not allowed.

Preamble

The licenses for most software are designed to take away your freedom to share and change it. By contrast, the GNU General Public License is intended to guarantee your freedom to share and change free software--to make sure the software is free for all its users. This General Public License applies to most of the Free Software Foundation's software and to any other program whose authors commit to using it. (Some other Free Software Foundation software is covered by

the GNU Lesser General Public License instead.) You can apply it to your programs, too.

When we speak of free software, we are referring to freedom, not price. Our General Public Licenses are designed to make sure that you have the freedom to distribute copies of free software (and charge for this service if you wish), that you receive source code or can get it if you want it, that you can change the software or use pieces of it in new free programs; and that you know you can do these things.

To protect your rights, we need to make restrictions that forbid anyone to deny you these rights or to ask you to surrender the rights. These restrictions translate to certain responsibilities for you if you distribute copies of the software, or if you modify it.

For example, if you distribute copies of such a program, whether gratis or for a fee, you must give the recipients all the rights that you have. You must make sure that they, too, receive or can get the source code. And you must show them these terms so they know their rights.

We protect your rights with two steps: (1) copyright the software, and (2) offer you this license which gives you legal permission to copy, distribute and/or modify the software.

Also, for each author's protection and ours, we want to make certain that everyone understands that there is no warranty for this free software. If the software is modified by someone else and passed on, we want its recipients to know that what they have is not the original, so that any problems introduced by others will not reflect on the original authors' reputations.

Finally, any free program is threatened constantly by software patents. We wish to avoid the danger that redistributors of a free program will individually obtain patent licenses, in effect making the program proprietary. To prevent this, we have made it clear that any patent must be licensed for everyone's free use or not licensed at all.

The precise terms and conditions for copying, distribution and modification follow.

GNU GENERAL PUBLIC LICENSE
TERMS AND CONDITIONS FOR COPYING, DISTRIBUTION AND MODIFICATION

0. This License applies to any program or other work which contains a notice placed by the copyright holder saying it may be distributed under the terms of this General Public License. The "Program", below, refers to any such program or work, and a "work based on the Program" means either the Program or any derivative work under copyright law: that is to say, a work containing the Program or a portion of it, either verbatim or with modifications and/or translated into another language. (Hereinafter, translation is included without limitation in the term "modification".) Each licensee is addressed as "you".

Activities other than copying, distribution and modification are not covered by this License; they are outside its scope. The act of running the Program is not restricted, and the output from the Program is covered only if its contents constitute a work based on the Program (independent of having been made by running the Program). Whether that is true depends on what the Program does.

1. You may copy and distribute verbatim copies of the Program's source code as you receive it, in any medium, provided that you

conspicuously and appropriately publish on each copy an appropriate copyright notice and disclaimer of warranty; keep intact all the notices that refer to this License and to the absence of any warranty; and give any other recipients of the Program a copy of this License along with the Program.

You may charge a fee for the physical act of transferring a copy, and you may at your option offer warranty protection in exchange for a fee.

2. You may modify your copy or copies of the Program or any portion of it, thus forming a work based on the Program, and copy and distribute such modifications or work under the terms of Section 1 above, provided that you also meet all of these conditions:

a) You must cause the modified files to carry prominent notices stating that you changed the files and the date of any change.

b) You must cause any work that you distribute or publish, that in whole or in part contains or is derived from the Program or any part thereof, to be licensed as a whole at no charge to all third parties under the terms of this License.

c) If the modified program normally reads commands interactively when run, you must cause it, when started running for such interactive use in the most ordinary way, to print or display an announcement including an appropriate copyright notice and a notice that there is no warranty (or else, saying that you provide a warranty) and that users may redistribute the program under these conditions, and telling the user how to view a copy of this License. (Exception: if the Program itself is interactive but does not normally print such an announcement, your work based on the Program is not required to print an announcement.)

These requirements apply to the modified work as a whole. If identifiable sections of that work are not derived from the Program, and can be reasonably considered independent and separate works in themselves, then this License, and its terms, do not apply to those sections when you distribute them as separate works. But when you distribute the same sections as part of a whole which is a work based on the Program, the distribution of the whole must be on the terms of this License, whose permissions for other licensees extend to the entire whole, and thus to each and every part regardless of who wrote it.

Thus, it is not the intent of this section to claim rights or contest your rights to work written entirely by you; rather, the intent is to exercise the right to control the distribution of derivative or collective works based on the Program.

In addition, mere aggregation of another work not based on the Program with the Program (or with a work based on the Program) on a volume of a storage or distribution medium does not bring the other work under the scope of this License.

3. You may copy and distribute the Program (or a work based on it, under Section 2) in object code or executable form under the terms of Sections 1 and 2 above provided that you also do one of the following:

a) Accompany it with the complete corresponding machine-readable source code, which must be distributed under the terms of Sections 1 and 2 above on a medium customarily used for software interchange; or,

b) Accompany it with a written offer, valid for at least three years, to give any third party, for a charge no more than your

cost of physically performing source distribution, a complete machine-readable copy of the corresponding source code, to be distributed under the terms of Sections 1 and 2 above on a medium customarily used for software interchange; or,

c) Accompany it with the information you received as to the offer to distribute corresponding source code. (This alternative is allowed only for noncommercial distribution and only if you received the program in object code or executable form with such an offer, in accord with Subsection b above.)

The source code for a work means the preferred form of the work for making modifications to it. For an executable work, complete source code means all the source code for all modules it contains, plus any associated interface definition files, plus the scripts used to control compilation and installation of the executable. However, as a special exception, the source code distributed need not include anything that is normally distributed (in either source or binary form) with the major components (compiler, kernel, and so on) of the operating system on which the executable runs, unless that component itself accompanies the executable.

If distribution of executable or object code is made by offering access to copy from a designated place, then offering equivalent access to copy the source code from the same place counts as distribution of the source code, even though third parties are not compelled to copy the source along with the object code.

4. You may not copy, modify, sublicense, or distribute the Program except as expressly provided under this License. Any attempt otherwise to copy, modify, sublicense or distribute the Program is void, and will automatically terminate your rights under this License. However, parties who have received copies, or rights, from you under this License will not have their licenses terminated so long as such parties remain in full compliance.

5. You are not required to accept this License, since you have not signed it. However, nothing else grants you permission to modify or distribute the Program or its derivative works. These actions are prohibited by law if you do not accept this License. Therefore, by modifying or distributing the Program (or any work based on the Program), you indicate your acceptance of this License to do so, and all its terms and conditions for copying, distributing or modifying the Program or works based on it.

6. Each time you redistribute the Program (or any work based on the Program), the recipient automatically receives a license from the original licensor to copy, distribute or modify the Program subject to these terms and conditions. You may not impose any further restrictions on the recipients' exercise of the rights granted herein. You are not responsible for enforcing compliance by third parties to this License.

7. If, as a consequence of a court judgment or allegation of patent infringement or for any other reason (not limited to patent issues), conditions are imposed on you (whether by court order, agreement or otherwise) that contradict the conditions of this License, they do not excuse you from the conditions of this License. If you cannot distribute so as to satisfy simultaneously your obligations under this License and any other pertinent obligations, then as a consequence you may not distribute the Program at all. For example, if a patent license would not permit royalty-free redistribution of the Program by all those who receive copies directly or indirectly through you, then

the only way you could satisfy both it and this License would be to refrain entirely from distribution of the Program.

If any portion of this section is held invalid or unenforceable under any particular circumstance, the balance of the section is intended to apply and the section as a whole is intended to apply in other circumstances.

It is not the purpose of this section to induce you to infringe any patents or other property right claims or to contest validity of any such claims; this section has the sole purpose of protecting the integrity of the free software distribution system, which is implemented by public license practices. Many people have made generous contributions to the wide range of software distributed through that system in reliance on consistent application of that system; it is up to the author/donor to decide if he or she is willing to distribute software through any other system and a licensee cannot impose that choice.

This section is intended to make thoroughly clear what is believed to be a consequence of the rest of this License.

8. If the distribution and/or use of the Program is restricted in certain countries either by patents or by copyrighted interfaces, the original copyright holder who places the Program under this License may add an explicit geographical distribution limitation excluding those countries, so that distribution is permitted only in or among countries not thus excluded. In such case, this License incorporates the limitation as if written in the body of this License.

9. The Free Software Foundation may publish revised and/or new versions of the General Public License from time to time. Such new versions will be similar in spirit to the present version, but may differ in detail to address new problems or concerns.

Each version is given a distinguishing version number. If the Program specifies a version number of this License which applies to it and "any later version", you have the option of following the terms and conditions either of that version or of any later version published by the Free Software Foundation. If the Program does not specify a version number of this License, you may choose any version ever published by the Free Software Foundation.

10. If you wish to incorporate parts of the Program into other free programs whose distribution conditions are different, write to the author to ask for permission. For software which is copyrighted by the Free Software Foundation, write to the Free Software Foundation; we sometimes make exceptions for this. Our decision will be guided by the two goals of preserving the free status of all derivatives of our free software and of promoting the sharing and reuse of software generally.

NO WARRANTY

11. BECAUSE THE PROGRAM IS LICENSED FREE OF CHARGE, THERE IS NO WARRANTY FOR THE PROGRAM, TO THE EXTENT PERMITTED BY APPLICABLE LAW. EXCEPT WHEN OTHERWISE STATED IN WRITING THE COPYRIGHT HOLDERS AND/OR OTHER PARTIES PROVIDE THE PROGRAM "AS IS" WITHOUT WARRANTY OF ANY KIND, EITHER EXPRESSED OR IMPLIED, INCLUDING, BUT NOT LIMITED TO, THE IMPLIED WARRANTIES OF MERCHANTABILITY AND FITNESS FOR A PARTICULAR PURPOSE. THE ENTIRE RISK AS TO THE QUALITY AND PERFORMANCE OF THE PROGRAM IS WITH YOU. SHOULD THE PROGRAM PROVE DEFECTIVE, YOU ASSUME THE COST OF ALL NECESSARY SERVICING, REPAIR OR CORRECTION.

12. IN NO EVENT UNLESS REQUIRED BY APPLICABLE LAW OR AGREED TO IN WRITING WILL ANY COPYRIGHT HOLDER, OR ANY OTHER PARTY WHO MAY MODIFY AND/OR REDISTRIBUTE THE PROGRAM AS PERMITTED ABOVE, BE LIABLE TO YOU FOR DAMAGES, INCLUDING ANY GENERAL, SPECIAL, INCIDENTAL OR CONSEQUENTIAL DAMAGES ARISING OUT OF THE USE OR INABILITY TO USE THE PROGRAM (INCLUDING BUT NOT LIMITED TO LOSS OF DATA OR DATA BEING RENDERED INACCURATE OR LOSSES SUSTAINED BY YOU OR THIRD PARTIES OR A FAILURE OF THE PROGRAM TO OPERATE WITH ANY OTHER PROGRAMS), EVEN IF SUCH HOLDER OR OTHER PARTY HAS BEEN ADVISED OF THE POSSIBILITY OF SUCH DAMAGES.

END OF TERMS AND CONDITIONS

How to Apply These Terms to Your New Programs

If you develop a new program, and you want it to be of the greatest possible use to the public, the best way to achieve this is to make it free software which everyone can redistribute and change under these terms.

To do so, attach the following notices to the program. It is safest to attach them to the start of each source file to most effectively convey the exclusion of warranty; and each file should have at least the "copyright" line and a pointer to where the full notice is found.

```
<one line to give the program's name and a brief idea of what it does.>
Copyright (C) <year>  <name of author>

This program is free software; you can redistribute it and/or modify
it under the terms of the GNU General Public License as published by
the Free Software Foundation; either version 2 of the License, or
(at your option) any later version.

This program is distributed in the hope that it will be useful,
but WITHOUT ANY WARRANTY; without even the implied warranty of
MERCHANTABILITY or FITNESS FOR A PARTICULAR PURPOSE.  See the
GNU General Public License for more details.

You should have received a copy of the GNU General Public License along
with this program; if not, write to the Free Software Foundation, Inc.,
51 Franklin Street, Fifth Floor, Boston, MA 02110-1301 USA.
```

Also add information on how to contact you by electronic and paper mail.

If the program is interactive, make it output a short notice like this when it starts in an interactive mode:

```
Gnomovision version 69, Copyright (C) year name of author
Gnomovision comes with ABSOLUTELY NO WARRANTY; for details type `show w'.
This is free software, and you are welcome to redistribute it
under certain conditions; type `show c' for details.
```

The hypothetical commands `show w' and `show c' should show the appropriate parts of the General Public License. Of course, the commands you use may be called something other than `show w' and `show c'; they could even be mouse-clicks or menu items--whatever suits your program.

You should also get your employer (if you work as a programmer) or your school, if any, to sign a "copyright disclaimer" for the program, if necessary. Here is a sample; alter the names:

```
Yoyodyne, Inc., hereby disclaims all copyright interest in the program
`Gnomovision' (which makes passes at compilers) written by James Hacker.

<signature of Ty Coon>, 1 April 1989
```

Ty Coon, President of Vice

This General Public License does not permit incorporating your program into proprietary programs. If your program is a subroutine library, you may consider it more useful to permit linking proprietary applications with the library. If this is what you want to do, use the GNU Lesser General Public License instead of this License.

GNU LESSER GENERAL PUBLIC LICENSE

Version 2.1, February 1999

Copyright (C) 1991, 1999 Free Software Foundation, Inc.
51 Franklin Street, Fifth Floor, Boston, MA 02110-1301 USA
Everyone is permitted to copy and distribute verbatim copies
of this license document, but changing it is not allowed.

[This is the first released version of the Lesser GPL. It also counts as the successor of the GNU Library Public License, version 2, hence the version number 2.1.]

Preamble

The licenses for most software are designed to take away your freedom to share and change it. By contrast, the GNU General Public Licenses are intended to guarantee your freedom to share and change free software--to make sure the software is free for all its users.

This license, the Lesser General Public License, applies to some specially designated software packages--typically libraries--of the Free Software Foundation and other authors who decide to use it. You can use it too, but we suggest you first think carefully about whether this license or the ordinary General Public License is the better strategy to use in any particular case, based on the explanations below.

When we speak of free software, we are referring to freedom of use, not price. Our General Public Licenses are designed to make sure that you have the freedom to distribute copies of free software (and charge for this service if you wish); that you receive source code or can get it if you want it; that you can change the software and use pieces of it in new free programs; and that you are informed that you can do these things.

To protect your rights, we need to make restrictions that forbid distributors to deny you these rights or to ask you to surrender these rights. These restrictions translate to certain responsibilities for you if you distribute copies of the library or if you modify it.

For example, if you distribute copies of the library, whether gratis or for a fee, you must give the recipients all the rights that we gave you. You must make sure that they, too, receive or can get the source code. If you link other code with the library, you must provide complete object files to the recipients, so that they can relink them with the library after making changes to the library and recompiling it. And you must show them these terms so they know their rights.

We protect your rights with a two-step method: (1) we copyright the library, and (2) we offer you this license, which gives you legal permission to copy, distribute and/or modify the library.

To protect each distributor, we want to make it very clear that there is no warranty for the free library. Also, if the library is modified by someone else and passed on, the recipients should know that what they have is not the original version, so that the original author's reputation will not be affected by problems that might be introduced by others.

Finally, software patents pose a constant threat to the existence of any free program. We wish to make sure that a company cannot effectively restrict the users of a free program by obtaining a restrictive license from a patent holder. Therefore, we insist that any patent license obtained for a version of the library must be

consistent with the full freedom of use specified in this license.

Most GNU software, including some libraries, is covered by the ordinary GNU General Public License. This license, the GNU Lesser General Public License, applies to certain designated libraries, and is quite different from the ordinary General Public License. We use this license for certain libraries in order to permit linking those libraries into non-free programs.

When a program is linked with a library, whether statically or using a shared library, the combination of the two is legally speaking a combined work, a derivative of the original library. The ordinary General Public License therefore permits such linking only if the entire combination fits its criteria of freedom. The Lesser General Public License permits more lax criteria for linking other code with the library.

We call this license the "Lesser" General Public License because it does Less to protect the user's freedom than the ordinary General Public License. It also provides other free software developers Less of an advantage over competing non-free programs. These disadvantages are the reason we use the ordinary General Public License for many libraries. However, the Lesser license provides advantages in certain special circumstances.

For example, on rare occasions, there may be a special need to encourage the widest possible use of a certain library, so that it becomes a de-facto standard. To achieve this, non-free programs must be allowed to use the library. A more frequent case is that a free library does the same job as widely used non-free libraries. In this case, there is little to gain by limiting the free library to free software only, so we use the Lesser General Public License.

In other cases, permission to use a particular library in non-free programs enables a greater number of people to use a large body of free software. For example, permission to use the GNU C Library in non-free programs enables many more people to use the whole GNU operating system, as well as its variant, the GNU/Linux operating system.

Although the Lesser General Public License is Less protective of the users' freedom, it does ensure that the user of a program that is linked with the Library has the freedom and the wherewithal to run that program using a modified version of the Library.

The precise terms and conditions for copying, distribution and modification follow. Pay close attention to the difference between a "work based on the library" and a "work that uses the library". The former contains code derived from the library, whereas the latter must be combined with the library in order to run.

GNU LESSER GENERAL PUBLIC LICENSE
TERMS AND CONDITIONS FOR COPYING, DISTRIBUTION AND MODIFICATION

0. This License Agreement applies to any software library or other program which contains a notice placed by the copyright holder or other authorized party saying it may be distributed under the terms of this Lesser General Public License (also called "this License"). Each licensee is addressed as "you".

A "library" means a collection of software functions and/or data prepared so as to be conveniently linked with application programs (which use some of those functions and data) to form executables.

The "Library", below, refers to any such software library or work which has been distributed under these terms. A "work based on the Library" means either the Library or any derivative work under copyright law: that is to say, a work containing the Library or a portion of it, either verbatim or with modifications and/or translated straightforwardly into another language. (Hereinafter, translation is included without limitation in the term "modification".)

"Source code" for a work means the preferred form of the work for making modifications to it. For a library, complete source code means all the source code for all modules it contains, plus any associated interface definition files, plus the scripts used to control compilation and installation of the library.

Activities other than copying, distribution and modification are not covered by this License; they are outside its scope. The act of running a program using the Library is not restricted, and output from such a program is covered only if its contents constitute a work based on the Library (independent of the use of the Library in a tool for writing it). Whether that is true depends on what the Library does and what the program that uses the Library does.

1. You may copy and distribute verbatim copies of the Library's complete source code as you receive it, in any medium, provided that you conspicuously and appropriately publish on each copy an appropriate copyright notice and disclaimer of warranty; keep intact all the notices that refer to this License and to the absence of any warranty; and distribute a copy of this License along with the Library.

You may charge a fee for the physical act of transferring a copy, and you may at your option offer warranty protection in exchange for a fee.

2. You may modify your copy or copies of the Library or any portion of it, thus forming a work based on the Library, and copy and distribute such modifications or work under the terms of Section 1 above, provided that you also meet all of these conditions:

a) The modified work must itself be a software library.

b) You must cause the files modified to carry prominent notices stating that you changed the files and the date of any change.

c) You must cause the whole of the work to be licensed at no charge to all third parties under the terms of this License.

d) If a facility in the modified Library refers to a function or a table of data to be supplied by an application program that uses the facility, other than as an argument passed when the facility is invoked, then you must make a good faith effort to ensure that, in the event an application does not supply such function or table, the facility still operates, and performs whatever part of its purpose remains meaningful.

(For example, a function in a library to compute square roots has a purpose that is entirely well-defined independent of the application. Therefore, Subsection 2d requires that any application-supplied function or table used by this function must be optional: if the application does not supply it, the square root function must still compute square roots.)

These requirements apply to the modified work as a whole. If identifiable sections of that work are not derived from the Library, and can be reasonably considered independent and separate works in themselves, then this License, and its terms, do not apply to those sections when you distribute them as separate works. But when you distribute the same sections as part of a whole which is a work based on the Library, the distribution of the whole must be on the terms of this License, whose permissions for other licensees extend to the entire whole, and thus to each and every part regardless of who wrote it.

Thus, it is not the intent of this section to claim rights or contest your rights to work written entirely by you; rather, the intent is to exercise the right to control the distribution of derivative or collective works based on the Library.

In addition, mere aggregation of another work not based on the Library with the Library (or with a work based on the Library) on a volume of a storage or distribution medium does not bring the other work under the scope of this License.

3. You may opt to apply the terms of the ordinary GNU General Public License instead of this License to a given copy of the Library. To do this, you must alter all the notices that refer to this License, so that they refer to the ordinary GNU General Public License, version 2, instead of to this License. (If a newer version than version 2 of the ordinary GNU General Public License has appeared, then you can specify that version instead if you wish.) Do not make any other change in these notices.

Once this change is made in a given copy, it is irreversible for that copy, so the ordinary GNU General Public License applies to all subsequent copies and derivative works made from that copy.

This option is useful when you wish to copy part of the code of the Library into a program that is not a library.

4. You may copy and distribute the Library (or a portion or derivative of it, under Section 2) in object code or executable form under the terms of Sections 1 and 2 above provided that you accompany it with the complete corresponding machine-readable source code, which must be distributed under the terms of Sections 1 and 2 above on a medium customarily used for software interchange.

If distribution of object code is made by offering access to copy from a designated place, then offering equivalent access to copy the source code from the same place satisfies the requirement to distribute the source code, even though third parties are not compelled to copy the source along with the object code.

5. A program that contains no derivative of any portion of the Library, but is designed to work with the Library by being compiled or linked with it, is called a "work that uses the Library". Such a work, in isolation, is not a derivative work of the Library, and therefore falls outside the scope of this License.

However, linking a "work that uses the Library" with the Library creates an executable that is a derivative of the Library (because it contains portions of the Library), rather than a "work that uses the library". The executable is therefore covered by this License. Section 6 states terms for distribution of such executables.

When a "work that uses the Library" uses material from a header file

that is part of the Library, the object code for the work may be a derivative work of the Library even though the source code is not. Whether this is true is especially significant if the work can be linked without the Library, or if the work is itself a library. The threshold for this to be true is not precisely defined by law.

If such an object file uses only numerical parameters, data structure layouts and accessors, and small macros and small inline functions (ten lines or less in length), then the use of the object file is unrestricted, regardless of whether it is legally a derivative work. (Executables containing this object code plus portions of the Library will still fall under Section 6.)

Otherwise, if the work is a derivative of the Library, you may distribute the object code for the work under the terms of Section 6. Any executables containing that work also fall under Section 6, whether or not they are linked directly with the Library itself.

6. As an exception to the Sections above, you may also combine or link a "work that uses the Library" with the Library to produce a work containing portions of the Library, and distribute that work under terms of your choice, provided that the terms permit modification of the work for the customer's own use and reverse engineering for debugging such modifications.

You must give prominent notice with each copy of the work that the Library is used in it and that the Library and its use are covered by this License. You must supply a copy of this License. If the work during execution displays copyright notices, you must include the copyright notice for the Library among them, as well as a reference directing the user to the copy of this License. Also, you must do one of these things:

a) Accompany the work with the complete corresponding machine-readable source code for the Library including whatever changes were used in the work (which must be distributed under Sections 1 and 2 above); and, if the work is an executable linked with the Library, with the complete machine-readable "work that uses the Library", as object code and/or source code, so that the user can modify the Library and then relink to produce a modified executable containing the modified Library. (It is understood that the user who changes the contents of definitions files in the Library will not necessarily be able to recompile the application to use the modified definitions.)

b) Use a suitable shared library mechanism for linking with the Library. A suitable mechanism is one that (1) uses at run time a copy of the library already present on the user's computer system, rather than copying library functions into the executable, and (2) will operate properly with a modified version of the library, if the user installs one, as long as the modified version is interface-compatible with the version that the work was made with.

c) Accompany the work with a written offer, valid for at least three years, to give the same user the materials specified in Subsection 6a, above, for a charge no more than the cost of performing this distribution.

d) If distribution of the work is made by offering access to copy from a designated place, offer equivalent access to copy the above specified materials from the same place.

e) Verify that the user has already received a copy of these

materials or that you have already sent this user a copy.

For an executable, the required form of the "work that uses the Library" must include any data and utility programs needed for reproducing the executable from it. However, as a special exception, the materials to be distributed need not include anything that is normally distributed (in either source or binary form) with the major components (compiler, kernel, and so on) of the operating system on which the executable runs, unless that component itself accompanies the executable.

It may happen that this requirement contradicts the license restrictions of other proprietary libraries that do not normally accompany the operating system. Such a contradiction means you cannot use both them and the Library together in an executable that you distribute.

7. You may place library facilities that are a work based on the Library side-by-side in a single library together with other library facilities not covered by this License, and distribute such a combined library, provided that the separate distribution of the work based on the Library and of the other library facilities is otherwise permitted, and provided that you do these two things:

a) Accompany the combined library with a copy of the same work based on the Library, uncombined with any other library facilities. This must be distributed under the terms of the Sections above.

b) Give prominent notice with the combined library of the fact that part of it is a work based on the Library, and explaining where to find the accompanying uncombined form of the same work.

8. You may not copy, modify, sublicense, link with, or distribute the Library except as expressly provided under this License. Any attempt otherwise to copy, modify, sublicense, link with, or distribute the Library is void, and will automatically terminate your rights under this License. However, parties who have received copies, or rights, from you under this License will not have their licenses terminated so long as such parties remain in full compliance.

9. You are not required to accept this License, since you have not signed it. However, nothing else grants you permission to modify or distribute the Library or its derivative works. These actions are prohibited by law if you do not accept this License. Therefore, by modifying or distributing the Library (or any work based on the Library), you indicate your acceptance of this License to do so, and all its terms and conditions for copying, distributing or modifying the Library or works based on it.

10. Each time you redistribute the Library (or any work based on the Library), the recipient automatically receives a license from the original licensor to copy, distribute, link with or modify the Library subject to these terms and conditions. You may not impose any further restrictions on the recipients' exercise of the rights granted herein. You are not responsible for enforcing compliance by third parties with this License.

11. If, as a consequence of a court judgment or allegation of patent infringement or for any other reason (not limited to patent issues), conditions are imposed on you (whether by court order, agreement or otherwise) that contradict the conditions of this License, they do not excuse you from the conditions of this License. If you cannot

distribute so as to satisfy simultaneously your obligations under this License and any other pertinent obligations, then as a consequence you may not distribute the Library at all. For example, if a patent license would not permit royalty-free redistribution of the Library by all those who receive copies directly or indirectly through you, then the only way you could satisfy both it and this License would be to refrain entirely from distribution of the Library.

If any portion of this section is held invalid or unenforceable under any particular circumstance, the balance of the section is intended to apply, and the section as a whole is intended to apply in other circumstances.

It is not the purpose of this section to induce you to infringe any patents or other property right claims or to contest validity of any such claims; this section has the sole purpose of protecting the integrity of the free software distribution system which is implemented by public license practices. Many people have made generous contributions to the wide range of software distributed through that system in reliance on consistent application of that system; it is up to the author/donor to decide if he or she is willing to distribute software through any other system and a licensee cannot impose that choice.

This section is intended to make thoroughly clear what is believed to be a consequence of the rest of this License.

12. If the distribution and/or use of the Library is restricted in certain countries either by patents or by copyrighted interfaces, the original copyright holder who places the Library under this License may add an explicit geographical distribution limitation excluding those countries, so that distribution is permitted only in or among countries not thus excluded. In such case, this License incorporates the limitation as if written in the body of this License.

13. The Free Software Foundation may publish revised and/or new versions of the Lesser General Public License from time to time. Such new versions will be similar in spirit to the present version, but may differ in detail to address new problems or concerns.

Each version is given a distinguishing version number. If the Library specifies a version number of this License which applies to it and "any later version", you have the option of following the terms and conditions either of that version or of any later version published by the Free Software Foundation. If the Library does not specify a license version number, you may choose any version ever published by the Free Software Foundation.

14. If you wish to incorporate parts of the Library into other free programs whose distribution conditions are incompatible with these, write to the author to ask for permission. For software which is copyrighted by the Free Software Foundation, write to the Free Software Foundation; we sometimes make exceptions for this. Our decision will be guided by the two goals of preserving the free status of all derivatives of our free software and of promoting the sharing and reuse of software generally.

NO WARRANTY

15. BECAUSE THE LIBRARY IS LICENSED FREE OF CHARGE, THERE IS NO WARRANTY FOR THE LIBRARY, TO THE EXTENT PERMITTED BY APPLICABLE LAW. EXCEPT WHEN OTHERWISE STATED IN WRITING THE COPYRIGHT HOLDERS AND/OR OTHER PARTIES PROVIDE THE LIBRARY "AS IS" WITHOUT WARRANTY OF ANY KIND, EITHER EXPRESSED OR IMPLIED, INCLUDING, BUT NOT LIMITED TO, THE

IMPLIED WARRANTIES OF MERCHANTABILITY AND FITNESS FOR A PARTICULAR PURPOSE. THE ENTIRE RISK AS TO THE QUALITY AND PERFORMANCE OF THE LIBRARY IS WITH YOU. SHOULD THE LIBRARY PROVE DEFECTIVE, YOU ASSUME THE COST OF ALL NECESSARY SERVICING, REPAIR OR CORRECTION.

16. IN NO EVENT UNLESS REQUIRED BY APPLICABLE LAW OR AGREED TO IN WRITING WILL ANY COPYRIGHT HOLDER, OR ANY OTHER PARTY WHO MAY MODIFY AND/OR REDISTRIBUTE THE LIBRARY AS PERMITTED ABOVE, BE LIABLE TO YOU FOR DAMAGES, INCLUDING ANY GENERAL, SPECIAL, INCIDENTAL OR CONSEQUENTIAL DAMAGES ARISING OUT OF THE USE OR INABILITY TO USE THE LIBRARY (INCLUDING BUT NOT LIMITED TO LOSS OF DATA OR DATA BEING RENDERED INACCURATE OR LOSSES SUSTAINED BY YOU OR THIRD PARTIES OR A FAILURE OF THE LIBRARY TO OPERATE WITH ANY OTHER SOFTWARE), EVEN IF SUCH HOLDER OR OTHER PARTY HAS BEEN ADVISED OF THE POSSIBILITY OF SUCH DAMAGES.

END OF TERMS AND CONDITIONS

How to Apply These Terms to Your New Libraries

If you develop a new library, and you want it to be of the greatest possible use to the public, we recommend making it free software that everyone can redistribute and change. You can do so by permitting redistribution under these terms (or, alternatively, under the terms of the ordinary General Public License).

To apply these terms, attach the following notices to the library. It is safest to attach them to the start of each source file to most effectively convey the exclusion of warranty; and each file should have at least the "copyright" line and a pointer to where the full notice is found.

<one line to give the library's name and a brief idea of what it does.>
Copyright (C) <year> <name of author>

This library is free software; you can redistribute it and/or modify it under the terms of the GNU Lesser General Public License as published by the Free Software Foundation; either version 2.1 of the License, or (at your option) any later version.

This library is distributed in the hope that it will be useful, but WITHOUT ANY WARRANTY; without even the implied warranty of MERCHANTABILITY or FITNESS FOR A PARTICULAR PURPOSE. See the GNU Lesser General Public License for more details.

You should have received a copy of the GNU Lesser General Public License along with this library; if not, write to the Free Software Foundation, Inc., 51 Franklin Street, Fifth Floor, Boston, MA 02110-1301 USA

Also add information on how to contact you by electronic and paper mail.

You should also get your employer (if you work as a programmer) or your school, if any, to sign a "copyright disclaimer" for the library, if necessary. Here is a sample; alter the names:

Yoyodyne, Inc., hereby disclaims all copyright interest in the library `Frob' (a library for tweaking knobs) written by James Random Hacker.

<signature of Ty Coon>, 1 April 1990
Ty Coon, President of Vice

That's all there is to it!

© 2009 Koninklijke Philips Electronics N.V.
All rights reserved.

NP2900_37_UM_V2.2
wk9383