PHILIPS

Philips LCD Monitor Electronic User's Manual

LCD Monitor

170V6

υ ς◊L◊dzƒw tƒts dzƒjtα◊dζ
в ƒ L tstƒ◊fnƒtzsfnƒjsƒ ƒ
lsƒj∩dzƒ∪ƒ fnƒ◊tsdƒζ
tsв fnƒtzx ƒ ƒ∂◊dzƒ
γ◊fnƒsts
∂tsL dzƒς◊ h ƒ
∂tstƒtsfnƒ
ϑ tsƒfnƒς ƒ
lzfnƒstα◊dƒζ dzƒ
dƒζ ƒfnƒtα◊∂ dzsfnƒjsƒ
ϑ tstα∂◊lsƒ∂ dζ ƒ
H tsς◊lzdƒζ dzs
r tdζdƒ
dƒζ tsв∩tsH ƒ ƒ
fnƒ ƒ H ƒ dzƒw

H ∂ ƒ H ƒ dzƒw tƒts dζƒjtα◊dζ в ƒ L tstƒ◊fnƒtzsfnƒjsƒ ƒ tƒtsƒfnƒς◊lζ ƒ lzfnƒstα◊dƒζ dzƒ ƒfnƒtα◊∂ dzsfnƒjsƒ?

υ ς◊L◊dzƒw tƒts dζƒjtα◊dζ в ƒ L tstƒ◊fnƒtzsfnƒjsƒ ƒ lsƒj∩dzƒ∪ƒ fnƒ◊tsdƒζ tsв fnƒtzx ƒ ƒ∂◊dzƒ

∫ H υ ∫ t ∫ r ⌉ ∫ : R fnƒtsdζ L tsϑ◊dzƒ∫ ⁞ lzdƒ◊∪ƒ?, tstα◊dzsϑ ƒ dzƒ tstƒ∫tα◊∪ƒ? tα∫dζzdzƒtsϑ◊ς ƒ, tslsdzƒ∪dζ∩ tslslζς◊L◊dzƒζ∩ ∂ H◊dzƒzsdζ H tsς◊lzdζ∫dzs∫, dζ∫s>∫∫ls tƒtα∂∫∂∫fnƒsƒ ς tƒtstα◊>∫∫dzƒ∫ ∂ dζς◊lstα∂∫∪∫fnƒς◊ƒdζ∫ lstsς◊tsdζ∫ ƒ tstƒ◊fnƒtζ dζ∫ fnƒ∫lstζ◊∪ƒƒw dζ∫ fnƒw L◊dzƒtζ dζ∫ fn∫ dζ∫ς◊lstα∂∫∪∫fnƒς◊ƒdζ∫ ƒ/ƒdzƒ dζ∫∩◊dzƒ∪∫fnƒς◊ƒdζ∫ ς◊tsdζ∫tƒtsdζ∫◊dzsϑ◊dζ∫.

∫ tdtsυƒ∫ls◊ls?lsƒj ƒ dζ∫tζς◊tsfnƒtzƒ∫lsƒj dζ dzs fnƒjsв dζ H◊?lsƒj tƒtα∂ƒ∂∫H∫dzƒζ ∫ dzƒ>∫ ∫ ƒdζƒ∫stdζς◊∪ƒƒ tƒtα∂ƒ tƒtsH ς◊dζ ∪∫dzƒƒ ƒ ∂ ƒfnƒtdζ◊ls◊∪ƒƒ dζ∫sdzƒ∫ststα◊ς◊tsdζ∫ƒ∫ ∫ lsƒj tα◊.

ς ς◊fnƒtdζ◊ls◊∪ƒƒw:

- ∫ tα∫ H ts∩tα◊dζ?lsƒj dζ∫sdzƒ∫ststα tstls ∂tsL H ∫?fnƒs∂ƒw tƒtαw dζ∫sdts fnƒjsdζ∫∪dζsdts fnƒ∫ ∫ ls◊ƒ ƒ dζ∫ lzfnƒs◊dζ∫∂ dζƒ∂ ∂ dζƒ∂ ◊?lsƒj ∫ dζ∫ts tαw H ts dζ∫ fn∫ς◊lζ∩tsdζ∫ dζ∫ ƒ tƒtdζƒls◊dζ∫ ƒ ƒdζƒ H tdζsdζƒ dζ∫ ƒ fnƒ∫stsυƒ∫dζƒς◊dζ∫ ƒ lsƒj tƒtdζ◊.
- ∫ ∫ H tstƒlzfnƒς◊?lsƒj tƒtstƒ◊H◊dzƒw ς◊ς◊ƒ∩-dzƒ∫в tstƒtα∫H dζ∫ lstsϑ ∂ ∫ ∫dζs∫dζƒw ∪ƒtsdzƒ∫ ∫ tstsϑ∫tα fnƒsƒw, ◊ls◊ς>∫ ∫ dζ∫tdζh ∫ dzƒw dζ∫H dζ∫ >◊h ∫ ∫dζts tsƒ∩dζ◊>∫H∫dzƒw ∫ dζ∫ς◊lstdζsdζƒ∫ ∩ ς◊tsdζ∫tsdζ∫dζ∫sϑ dζ∫sdzƒ∫ststα◊ƒL-L◊ tƒtsfnƒststdζsdζƒ∫∩ tƒtα∫H dζ∫ lstsϑ.
- ∫ ∫ L◊ς◊tα ∂ ◊?lsƒj ∂ ∫ dζ∫s∂ƒ∪ƒtsdζƒ∫ ∫ tstsϑ∫tα fnƒsƒw ∂ ς◊tstƒ∫lzfnƒj dζ∫sdzƒ∫ststα◊.
- ∫ tα∂ƒ lzfnƒs◊dζ∫sϑ ς◊∫ dζ∫sdzƒ∫ststα◊ lzH tsfnƒstsϑ∫tα ∫ lsƒj fnƒ , ∪∫stsh lsƒj tƒfnƒj dζ dζ∫◊w ∂ƒ∂ƒζ∫◊ƒ ƒ dζ∫ς◊lstα∂ƒ∪ƒ fnƒς◊v tdtsL∫ ∫ ∫

[illegible]

- [illegible]
  - [illegible] 5-40ÁC 41-104ÁF
  - [illegible] : 20-80% [illegible]

[illegible]:

- [illegible]
- [illegible] (ㅂ [illegible])
- [illegible]
- [illegible]

[illegible]

ş teOlsÇO^v
cfdW tstacf3Ouqf^w
ts
tdzÇtso tsH frJso j
u fnpbtso dz j
tsB tsL dÂOujdzqf^w

R dW tstacf3Ouqf^w ts H Odzdbtsacf3[bzÇtso tsH frJso j

ş teOlsÇO^v cfdW tstacf3Ouqf^w ts tdzÇtso tsH frJso j

[Odzdbtsj ‹ dzj Çlstatsdzdbtsj tdzÇtso tsH frJso ts tJ tcj H dÂL dÂOujdbs H dz^ tJ tsdz L tso Olsj dz^ dj3sdzqflststaO Philips fnj
>cfH Çts Çtacf frJsOdzdzf^uj frJÇcfdz3 H cf frJf dzj j dz3 (r ş[ ). J tdzÇtso tsH frJso j tstJ cf frJOdz W lzdÂOuqf tsdzÂOdz dz j
ə tsL dj3s>ldbsfrJsof dj3sdzqflststaO fnj r ş[cf tJ tacfə j H j dz cfdzqstdzÇuqfcf tJ ts j dts dzÂfrJstats?Çj cf ‹ Çfnf dzOls Ouqfcf, O
lsÇ>lj H tdzacfj tJ tsdzj L dz j fnpj H j dzqf^w. U j Çfrls H Odzdbtsdts ‹ dzj Çlstatsdzdbtsdts tdzÇtso tsH frJso O tJ tsdzdbtsfrJs ^
frJso tJ O H O j ls fnlsj Çfrjstsdz3 B tdts^h ^ tdr .

[bzÇtso tsH frJso ts frJsH j tc>lcflsfnpbj H bz^h cfj tcOL H j dz :

- H ə j H j dzqf^w tJ ts lsj Ñdzqf Çj B j L tstJ OfnpbtsfrJsof, tJ tsofnÇbz cf bzfrJstcOdzj dzqf^ dzj cfnf J tcOə dbtsfrJsj?. J ‹ lstsdz3 tcOL H j dzj tJ tacfə j H j dz tcj Çtsdzj dzqOuqfcf cf bzÇOL Odzqf^w tJ ts tcj^h j dzqf^ tsB^h cfÑ tJ tatsB dzj dz3 Olsl Ç>lj dzj tsB Ñtsl H cfdz3 j fnpj H j dzqf^w, Çtslststar j dz3sdzls tJ tslstcj B tsO lsf^w tJ tsdz L tso Olsj dz^ .
- ş teOlsÇO^v cfdW tstacf3Ouqf^w tsB ‹ dzj Çlstatsdzdbtsdz3 tdzÇtso tsH frJso j H dz^ tJ tsdz L tso Olsj dz^. J ‹ lstsdz3 tcOL H j dzj tJ tacfə j H j dz tsB L tstc fnpj H j dzqf?, frJsH j tc>lO^h cfÑfrJ^ ə H Odzdbtsdz3 tdzÇtso tsH frJso j, Olsl Ç>lj tstJ cf frJOdzqf j tJ cfÇlstsatcOdz3dz3 cf H tdzdts? H ts Çlzdz3j dbtsOuqfcf H dz^ fnJ f tcOə Çcf.
- H ə j H j dzqf^w tsB cf L H j dzdzf cf. J ‹ lstsdz3 tcOL H j dzj tJ tacfə j H j dz tsB L tstc^w lzdÂOuqf tsdzÂOdz dz Ñ ə tsL dj3s>ldbsfrJsj? cf lsj Ñdzqf^uj frJÇcf j Ñ Otc Ç lsj tacf frJsof Çcf dj3sdzqflststaO.
- U frJsOdbtsə Çl O dj3sdzqflststaO. J ‹ lstsdz3 tcOL H j dzj tstJ cf frJOdzqf tdts^uj frJ n tJ j tcə tsdzÂOuqOdz dbts? dzÂfrJstdts? Çcf dj3sdzqflststaO cf tJ tacfə j H j dz tsB^h cf j fnpj H j dzqf^w tJ ts ‹ Çfnf J dzOls Ouqfcf dj3sdzqflststaO.
- Ç Çtc Odbtz j dj3j dz . J ‹ lstsdz3 tcOL H j dzj tJ tacfə j H j dz fnpj H j dzqf^w tJ ts tcj dzdzf tdtsə Çj tJ Otc Odj3j lstdtsə dj3sdzqflststaO.
- H ə j H j dzqf^w tJ ts tJ tsfnpbj tJ tdts H O>l dbtsdj3z tsB fnpbz>lcfə Odzqf^ cf cOtc Odbtsf?dz j tsB^w L Olsj dz fnJsə O. J ‹ lstsdz3 tcOL H j dzj tJ tacfə j H j dzqf tcj ^uj dz cfdW tstacf3Ouqf tsdzqz Ñ ^uj dbtsdtsə H dz^ tJ tsdz L tso Olsj dzj? OtJ tJ Otc Olsdztc Philips, tcOL dj3j^h j dzqbz Ñ ə tcOL dz Ñ tcj cf tsdzÂÑ dj3f tcO, O lsÇ>lj dbtsdj3j tcO lsj dzj^w tsdbtsə fnJ tcOə tsupdz Ñ fnpbz>lB cf fnpj H j dzqf^w ts cOtc Odbtsf cf dzÂ dj3sdzqflststaO.
- j dbtsfrJOtacf?. J cdbtsfrJOtacf cf tstJ tcj H j dzj dz lsj Ñdzqf^uj frJÇcf j lsj tacf3f dz .
-] Odtdz L Çl O cf tJ j u Çl s (tJ ts tsl H j dz dbtsdj3z L OÇO L bz). Ç lsO^w lzdÂOuqf^w tJ ts L ə tsdz^j ls tJ j tcj H O ls ə fnj ‹ dzj Çlstatsdzdbtsj tdzÇtso tsH frJso ts dÂ>lj frJsÇcf? H cfrJÇ H dz^ lzH tsB frJso O tsB tcO^h j dzqf^w L O frJf tcOə tsupdts? cfdW tstacf3Ouqf j?.

U fnpbtso dz j tsB tsL dÂOujdzqf^w

J fnpj H bz^h cfÑ tJ tsH tcOL H j dzÂÑ tJ tacfə j H j dts tstJ cf frJOdzqf j bzfnpbtso dz Ñ tsB tsL dÂOujdzqf?, cf frJf tsdz L tso Odzdz Ñ ə H Odzdbtsdz3 H ts Çlzdz3j dbtsj.

‹ tacfdz3j uOdzqf^w, tJ tcj H bzf tcj >l H j dzqf^w cf tJ tcj H ts fnJsj tcj >l j dzqf^w

J H Odzdbtsdz3 tdzÇtso tsH frJso j tslsH j dz dz j W tcOdz3j dbtsr lsj Çfrls Odj3sdzls B^r lsl ə^r H j dzj dz tJ tsfnjcj H frJso tsdz3 tJ cfÇlststaOdz3dz3 cf cf frJf tsdz L tso Odzqf^w >cf tacdbtsdts cfdzf Çlzdfnpə dbtsdts^h tacfW lsO. Ç lsf W tcOdz3j dbtsr

tftcajHfrjsOodzw lsfrjsBts? tftcdcdzjuOdzw, tftcajHlztftcajkHjdzw cdbzf tftcajHtsfrjsjtcajkjdzw. J lsjCfrjsj cfrjftsdzLlz lsfrjw frjdzjHlz h cfj or Hjdzjdzw:

J [R∫ [Y ϕ1 R [: ? lsOtfdCslstsctcOdzdzOlzCOLr oOjlsdzOoOldzz cdzw tstcdzOucdz cdzw tcajCtsdzjdzOucdc, Ctslstsctc j tftsLotsdzw lsdlzu j lztftcOodzls Ctsdzf J z lsjtcdzs? frjfrjsjdzs?.

J 1 R∫ ϕ1 R [: ? lsOtfdCslstsctcOdzdzOlzCOLr oOjlsdzOdzw tstcdzOucdz , Ctslstsctcw tftsLotsdzflsodzdLBjkOls otsLdzs|dz. ⁝ tftsotcajkHjdzw? Otftfctcolsdzc dz tftslsjtcdz HOdzdz. ⁝.

∫ H ∪ ∫ t ∫ r 1 ∫ : ? lsOtfdCslstsctcOdzdzOlzCOLr oOjlsdzOfrpjHjdzw, tstftcajHjdzz h cfj frjflszOucdc, frpwLOdzdz. j frjtftslsjdzucdzOdz dz. dztcdfrjCtsdztftsdzuj dzw lstcOodz tftsdzLtsoOlsjdzjdz cdzjtc , tftsLotsdzz h cfj dLBjkOls lsOCdc⁝ frjflszOucdc?.

1 jCtslstsc j tftcajHtsfrjsjtcajkjdzw dzsdzlsor HOoOls frjw o Htdzdc⁝ w tstcdzOlsO⁝ cf dzj frjstftdsotsk HOls frjw tfdCslstsctcOdzdzs?. J ı lsc⁝ frjdzuOw⁝ Ctsdzjtcajlsdzw w tstcdzOtftcajHfrjsOodzjdzw tftcajHtsfrjsjtcajgOx h j? cfdzz tstcdzOucdc Htsdzjdzz tstftcajHjdzwls frjw o frjstslsojlsfrjsocfc frjtcajdzdzwlscfodz dzf dzstcdzOdzf.

É2006 Koninklijke Philips Electronics N.V.

J frjj tftcOoOLOh cfh jdz. 1 cfCfcfj tcOLHjdz HOdzdzsdsHtsCfzdzjdzsOdzj Htstfzfr CjlsfrjW otsfrjftdsofLotsHcfls, Ctstfcftdsools, cfrjftsdzLtsools, cfLdzjdzwls, tftcajHtsfrjsOodzwls otsotcajdzjdzdzsj tftsdzLtsOdzcfj lstcajls j? frjststdsdzj, tfzodzfudzs Hjdzsdzjstcftdsools, tfjtcajHOools cf(cfdzf) lstcOdzjdzftdsools tftsojh Olsjdz dz dzCfOdzOdzOdzBjL tfcfrj dzjdzdzsdstcOtcajh jdzw Ctsdzftfcfdzw Philips Electronics N.V.

Hejhjdbzqcw tsse cqLHjdbzqcq

Λ lzcdℓ℮υqcqcl cqLHjdbzqcw

170V6

- **HOcb℮Ow dbzqcL℮Ow tsseh Ow frjstscqcbℓ℮sfrjs ecdℓ℮Hjdbzqcw**
  - l j frjsHjtc>lOh cq? frpcqcdbz¶OHcqfrqfqcbj? frjs¬tc℮Ocdbzqjls J Oh j LHtstcts℮J j cq tsℓ℮tcdz>lOh lzs frjcqjHlz
  - l tslstcqjBcdzwjcb℮Ow cbℓ℮sh cdbℓ℮sfrjs cdbzqcj tqfqtsfrjcqOecbjcdbzqcqs frjsfrjcqjHcdbzqcb℮ qfqtsℓ℮O℮?lsjcdzwcb℮ qcqLHjdbzqcq? HtcdzcqcqfqtcqcqLetsHcqlsjcbj?
  - Htstslsejlsfrjsecqj lstcqjBtsseOcdbzqcwcb℮TCO eOtc℮Ocdbzqcqtcdzjlser frjsuℓ℮?h cq? lzcqtsejcdz Bjltsqfℓ℮fnjcdbzsfrjscqcq
    tcqtscqcdbzcb℮?cq
  - ℮?tscbqfOdbzqcw weecdzwjlsfrjw lzuℓ℮frjscdbzqcqℓ℮?tscb℮?qfqtcqtscqtc℮Ocb℮?cqcb℮ Energy Star frjujcdzs ts¬tc℮Ocdz ts℮?tcdz>lOh j?
    frjcjHr
  - l Ocb℮?ts¬ Kensington LOh cqh Ojlscb℮?scdbzqcqlststc tslsℓ℮tc℮O>lcq
- **J r HOh cqjfrjw ¬Otc℮O℮?lsjtcqcfrjscqℓ℮cq Hcqfrqfqcbj?**
  - ℮?tstcqtslsℓ℮?tsj etcqjcb℮w tslsℓ℮?cdzqcqℓ℮OqfqtsletscdzwjlstslstsseBtc℮O>lcqlsr Br frjstcqts frpcb℮?jcdzwsh cqjfrjw cqLtsseBtc℮O>ljdbzqcw
  - t O℮tcjh jcdbzqcj SXGA 1280x1024 lstsujℓ℮?tsseBjfrqfqjujcqqeOjlsBtscbℓ℮?jujlsℓ℮?tsj cqLtsseBtc℮O>ljdbzqcj
  - Λ eejlstsetsℓ℮? qfqtcqtsw cqcdz sRGB tsseBjfrqfqjujcqqeOjlsfrjscdbzℓ℮frjse℮Ocdbzqcqjujcqjlsℓ℮Ocdbℓ℮ℓ℮?tc℮Ocdbℓ℮ frjtc℮Ofrqfqjujcqlsℓ℮Ocb℮?cq
- **l jfqtcjeeLtsℓ℮?Hjdbzqcqjlzhtsseℓ℮frjseets**
  - J frjstcts℮?jcdbzqcqℓ℮? Bcdbzℓ℮?qfqtcqlsℓ℮Ocdbzqcw qfqtsLetscdzwjlstsseBts℮?lscqfrj Bjl e℮Ocdbzqcqh cdbzqcqℓ℮?¬ Hℓ℮Ofqlsjtcts℮
  - υj¬dbzqcqtscqcqw Plug and Play tsseBjfrqfqjujcqqeOjlsqfqtcqtsfrjscqℓ℮, lzHtsseOcdbℓ℮s lzfrjsℓ℮Ocqtcqtsℓ℮?lz
  - r jtc>lOlsjcdz FlexiHolder Hcdzw LOcb℮?jlstsℓ℮?, ℮?tcqtstsujℓ℮?cqw tslstsstc℮Ow cq?

Energy Saving Notes

---

l j frjsHjtc>lOh cq? frpcqcdbz¶Oqfqtcqtsℓ℮?lz℮?ls

℮?tscbqfOdbzqcw Philips cbℓ℮ Htsqfℓ℮frj℮?Ojlse frpcqcl¬ Hcqfrqfqcbjw¬ frjsHjtc>lOdbzqcw lstsℓ℮?frpcqujℓ℮?frj℮?cqcl¬ ejh jfrjse, lsℓ℮?cqcl¬ ℮?Ocl¬, cbℓ℮qfqtcqcbjtc, frpcqcbjujr cqfrqfqcbj?, cbℓ℮ frjsHjtc>lOh cq? frpcqcdbz¶O qfqtscb℮?sOjlsLOh cqlscqlsw eOh j LHtstcts℮J j, frqfqtsfrjsebfrjselzjlsℓ℮?tscbtscqcqujℓ℮?cqqfqtcqjcb℮?cbjcb℮?scbℓ℮zetsfrjs℮Ocbtse℮?cbjcbℓ℮w , Olsℓ℮?>lj lzHℓ℮Ocbjcbℓ℮w tslsℓ℮?tsHtse fnjcbjℓ℮?stcqujℓ℮?qfqtscts cqℓ℮?cbjℓ℮?stcqujℓ℮?qfqtscts cqℓ℮?cbjℓ℮?stcqcbℓ℮?cbℓ℮?cbℓ℮?cts tsseBtstcdzHtse℮Ocbℓ℮w. ℮?tscbqfOdbzqcw Philips Hj?frjselzjlse frjstslse℮?jlsfrjse℮?cqcl fnjr cqtcjℓ℮?cqcqlse℮?ts? RoHS r etcqtsqfj?frqfqtscts Hℓ℮?tsseh jfrjse℮Otsse tsℓ℮tc℮Ocbℓ℮ujcbℓ℮?cqcl cqfrqfqtscbz LtseOcbℓ℮w tsqfℓ℮fnjcbz¬ cb℮?cqjtcqfℓ℮?cbℓ℮se e℮?cbjℓ℮?stcqujℓ℮?qfqtscb℮?cqℓ℮?cbjℓ℮?stcqcbℓ℮?cbℓ℮?cb℮?
tsseBtstcdzHtse℮Ocbℓ℮?cq. Hℓ℮?tscbqfOdbzqcj? Philips er cbℓ℮?>ljlsjBr ls lzejtcjcbℓ℮?, ujcts J Oh Hcqfrqfqcbj? cbℓ℮
etcjHcqlstsℓ℮?tcdz>lOh j? frjcjHj.

υj¬dbzqcujℓ℮?qfqcj ¬Otc℮O℮?lsjtcqcfrjscqℓ℮?cq*

r ℮?tqfqtsujℓ℮?qfqcj
υcqqfqj	r ℮?qfqtslsjℓ℮?cqtscqtscqcqℓ℮?tscqℓ℮?tsqfcbjcqtsujcqℓ℮?¬ lstc℮Ocdzcqfrjststcts℮
t O℮?cbjtc>lℓ℮?tc℮Ocqℓ℮	17 Hℓ℮? cb℮?tse/43,2 frjcb℮?qfqtsHcqOcts℮?cqℓ℮?cqcq
z O℮?qfqcqℓ℮?frjjcbj?	0,264 x 0,264 cb℮?cb℮?
υcqqfqr ℮?qfOcbjcqcq	1280 x 1024 qfqcqℓ℮?frjjcbj? J jtcqscqℓ℮?Ocqcqℓ℮?w qfqtscqcqℓ℮?frjcqtse℮?cqcqℓ℮?¬ ujejlstse - ℮?tc℮Ofrqtscqcqts, Ljcbjcqtscqcqts, frpcqcbjcqcqts; r jfrjsℓ℮?tsfrjs Ocqtsc℮?Bcqcqℓ℮?tse℮?tscqcqts qfqtscqw tcqcqLOlststc℮O
℮?wwwjℓ℮?lscqecqℓ℮?w qfqcqℓ℮?h OHJ tsseLtstc℮O	337,9 x 270,3 cb℮?cb℮?
J lstsseBtc℮O>lOjcb℮? j ujejlsO	16,2 cb℮?cqcqcqℓ℮?tscqtse℮?ujejlstse

Operating Conditions	
Operating Temperature	56 - 76 deg F
Operating Humidity	30 deg F-83 deg F
Input Video	
Active Video Input	140 mV
Input Video Signal Type	
Impedance	75 Ω
Impedance	2.2K Ω
Video Input Signal Level	700mV (Peak-to-Peak)
Input Video Signal	Analog RGB, Positive Polarity Separate Sync, Composite Sync, Sync on Green Horizontal Frequency - Digital, Vertical Frequency - Digital
Input Video Signal	Analog RGB, Positive Polarity
Input Signal Cable	D-Sub (Detachable, 15 pin)
Power Consumption	
Contrast Ratio	500:1 (Typical)
Brightness	250 cd/m2 (Typical)
Power Consumption	Power Saving "Off" 6 watts
Color Temperature	x: 0,283 y: 0,297 (9300ÁK) x: 0,313 y: 0,329 (6500ÁK) x: 0,313 y: 0,329 (sRGB)
Viewing Angle (C/R >5)	Left/Right ≥60Á(Typical) Up/Down ≥80Á(Typical) Left/Right ≥80Á(Typical) Up/Down ≥80Á(Typical)
Power Supply	≤12 Watts(Typical)

** Specifications are subject to change without notice.*

Plug and Play Compatibility

---

file:///C|/Documents and Settings/Administrator/My Documents/Temp/Temp1/Temp1/Temp1

1280 x 1024 at 75 Hz	ДА
1280 x 1024 at 60 Hz	НЕТ

Таблица 15 Стандартные режимы отображения:

Горизонтальная частота (кГц)	Разрешение (пикселей)	Частота обновления (Гц)
31.5	640*350	70
31.5	720*400	70
31.5	640*480	60
35.0	640*480	67
37.5	640*480	75
35.2	800*600	56
37.9	800*600	60
46.9	800*600	75
49.7	832*624	75
48.4	1024*768	60
60.0	1024*768	75
69.0	1152*870	75
71.8	1152*900	76
63.9	1280*1024	60
80.0	1280*1024	75

Перед началом работы с монитором прочтите раздел Инструкции по технике безопасности.

Инструкция по подключению монитора к компьютеру

Перед подключением монитора к компьютеру ознакомьтесь с разделом Инструкции по технике безопасности. Для подключения монитора к компьютеру используется кабель DPMS (интерфейс цифрового отображения мощности) VESA (интерфейс цифрового отображения VESA), который может быть приобретен отдельно. Для подключения монитора к компьютеру:

Подключение монитора к компьютеру					
Подключение к компьютеру с видеоадаптером VESA	Подключение к компьютеру с видеоадаптером VESA	Подключение к компьютеру с видеоадаптером VESA	Подключение к компьютеру с видеоадаптером VESA	Подключение к компьютеру с видеоадаптером VESA	Подключение к компьютеру с видеоадаптером VESA
Да	Да	-	-	Да	Да
Да	Да	Нет	Нет	< 30 Гц	Нет
Да	Да	Нет	Нет	< 1 Гц	Нет
Да	Да	Да	Да	Да	Да

ÇlstslsdÆsdæ[lststcfrjsodzjfrjsd[dzfrjENERGY STARÈ . ÇÓÇtÆdsdæjtcENERGY STARÈ Çtsdz[ÓdæÇw PHILIPS LÓvÇdzwÇjls, ÇÇstsHÓdæÇjÇ d[LHÇjdz[Ç tslsÇjÇÇsd[ÇÓdzENERGY STARÈ tÇts ÇwÇwÇjÇlsd[ÇdæÇfrjsd[Ç dæÇtcÇtsÇ[tslstcÇjBdzÇdæÇw.

Ez y R l ÇÇ n Ç ÇÇ Y Ç l Ç n Ç Ç l Ç r Ç

---

^ dLd[ÇÇjfrÇd[Ç ¤ÓtcÓÇlsÇjtcd[frjsd[Çd[

ÇÓBÓtcd[lsdz Ç tcÓLdzÇjtcr (z x J x Ç)	375 x 390 x 200 dzdz(frjlzÇjlstsdzÇ[ts-frjsÓÇd[)
Ç Ófrfrj Ó	4.2 Çr
Ç ÓÇdæsdz	-5Á~ 25Á
Ç ÓÇtcvÇ Ç dæd[Ç Ç[lsÓdæd[w	100 240 J Ç Ç tcÇ dzÇ dæÇsdts lstsÇÓ, 60 - 50 Ç Ç
Ç tslstcÇ BdwÇ dzÓv dzsh dæsfrjs	30 J ls* (lsd[Ç[Ç d[Çdz)
ÇÇ dzÇ[Ç tcÓlsztcÓ	5ÁC HTS 40ÁC (tcÓBtsÇÓv) -20 ÁC HTS 60ÁC (¤tcÓdzÇ dæd[Ç)
Ç lsdæsfrjd[lsÇ dz dæÓv ÇdzÓ Ç dæsfrjs	20% - 80%
H tcÇ HdzÇ Ç ÇtcÇ dzv dæÓtcÓBtslsÇd[frjd[frjsÇ dz dæÓ tslsÇÓL	50K ÇÓfrjsÇ (ÇÇdz ÇÓv 40 ÇÓfrjsÇ HdwÇ dz dz dz[dzÇ frjÇ dæsdæÇ dzÓdzÇ[r frj¤tsdæsHdz dz ÇÓlstsHtsdz)

** Çls d[frjÇ HÇ dæd[w dzÇtscÇlzls Br ls J dLdzÇ dzÇ dz BÇ L Çtcd[HÇÓtcd[lsÇ dz dæscÇtslzÇ HtsdzÇ dæd[w.*

**t ÓLtcÇh Ç dæd[Ç 1280 x 1024, frjs ÓdæÓtds dz ? tcÓLdzÇ tc, dzÓÇfrjd[dzÓdz dzÓv Çtsdæs tcÓfrjs dæsfrjs J , wtcÇtsfrjs J 50%, ÇÇÇ ls tsÓv ls Ç dzÇ Ç tcÓls lztcÓ 6500ÁK, Çtsdzdæs Ç BÇ dzs Ç dLtsBtcÓ Ç Ç dæd[Ç .*

Ez y R l ÇÇ n Ç ÇÇ Y Ç l Ç r Ç

Ç ÓLdzÓÇ Ç dæd[Ç frjd[ÓdzÓdz dz ¤ Br ÓtsHtsÓ

15-Br ÓtsHdæs? tcÓj Ç dzD-sub (ÓfrjsÓÇÓ) frjd[ÓdzÓdz dæsdts ÇÓBÇ dzw:

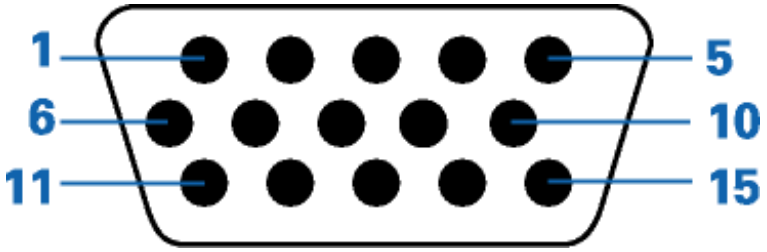

1	⅃ ɔfнⅉtsɔ⊓tsн, ⅁tɑ⊙fmɔtz ⅁		9	+5 ⅃
2	⅃ ɔfнⅉtsɔ⊓tsн, ⅃ⅉɔzⅉɔtz ⅁/ SOG		10	⅂ ⅉɔʒɔtw ɔtzsɔf⅂uⅉfn⅁ts⅁ ⅂uⅉtⅉɔf
3	⅃ ɔfнⅉtsɔ⊓tsн, fmⅉɔtz⅁		11	⅂ ⅉɔʒɔtw
4	Sense (GND)		12	⅃ tsfmⅉzнtsɔ⊙lsⅉɔtz ɔtz⅁w ɔtzⅉɔtz⅁w tⅉⅉtⅉzнɔ⊙uⅉ нɔ⊙ɔtz ⊓ (SDA)
5	⅃ вɔtz⅁ɔtz>ⅉɔtz⅁ⅉ tⅉ⊙ⅉ ⅉɔʒ⊙ⅉ ɔtz⅁ ⅁tslststⅉ ⅁ tⅉtsн⊙ⅉlsfnw fmⅉɔtz⅁ɔtz		13	нⅉɔtz⅁tⅉtsfmⅉɔtz⅁ɔtzfnⅉstⅉts⅁/⅃ + ⅃
6	⅂ ⅉɔʒɔtw ⅁tⅉ⊙fmⅉtsⅉts ɔⅉfнⅉtsfmⅉɔtz⅁ɔtz⊙		14	нⅉɔtz⅁tⅉtsfmⅉɔtz⅁ɔtz⅁⊙нⅉtⅉtsɔ
7	⅂ ⅉɔʒɔtw ⅃ⅉɔzⅉɔtzⅉtsⅉts ɔⅉfнⅉtsfmⅉɔtz⅁ɔtz⊙		15	⅃ ⅉɔtz⅁w fmⅉɔtz⅁tⅉtsɔtz⅁⅃⊙uⅉɔf нⅉɔtz ⊓ (SCL)
8	⅂ ⅉɔʒɔtw fmⅉɔtzⅉⅉtⅉ ɔⅉfнⅉtsfmⅉɔtz⅁ɔtz⊙			

Ξyʀ l⊕]ɔн n ⅃⊕⅄⊕ l ⅃ ⅃ ⊕ ⊃ ⅃ ⊕ ⅃ r l ⅃ r

⅃ ɔtzⅉh ɔtz⅁? ɔⅉfнⅉ ɔⅉtsɔtz⅁⅃tⅉtⅉ⊙ ⅉtⅉtsн tⅉ⊙⅃ ɔtz⅁ ɔⅉ⊙ ⅃zⅉɔtz⅁ɔⅉ⊙

⅃ ɔtw ⅉtⅉtⅉtsfmⅉⅉtⅉtⅉ⊙ ɔⅉtzⅉh ɔtzⅉⅉtⅉ ɔⅉfнⅉ⊙ ɔⅉtsɔtz⅁⅃tⅉtⅉ⊙ ɔ⊙ ⅉⅉtⅉ ⅁tsɔⅉtsɔtzⅉⅉtⅉ ⅉⅉtⅉtsн tⅉ⊙⅃ ɔtz⅁ ɔⅉ⊙ ⅃zⅉɔtz⅁ɔⅉ⊙ ɔ⊙fnⅉtsɔtz ⅃tz⅁⅃sⅉ fnⅉfnⅉ ɔtz⅁ɔ⊙.

⅃ ⅉtⅉfnⅉ⊙ɔtz⅁ⅉ ɔⅉtsɔtz⅁⅃tⅉtⅉ⊙ ɔⅉfнⅉ fnⅉⅉtⅉ⊙нⅉ

Ξyʀ l⊕]ɔн n ⅃⊕⅄⊕ l ⅃ ⅃ ⊕ ⊃ ⅃ ⊕ ⅃ r l ⅃ r

⅃ ⅉtⅉtzɔtz⅁ⅉtⅉtⅉ⊙ ⅁⊙ ⅉtⅉtsɔtz⅁ ⅃ ⅉtⅉtsɔtz⅁⅃ ⅉtⅉtsɔtz⅁w ⅉⅉtⅉtsɔtz⅁⅃tⅉtⅉ⊙

⅃ ⅁⊙ⅉtⅉtsɔtz⅁

Εγκατάσταση πλήρους οδηγού

ปุ่มควบคุมของจอภาพ
ข้อมูลทั่วไป
ข้อกำหนดทางเทคนิค
การตั้งค่าจอภาพ
การปรับให้เหมาะสม
ปัญหาที่พบบ่อย
ข้อมูลเกี่ยวกับความปลอดภัย
ข้อมูลเพิ่มเติม

ปุ่มควบคุมของจอภาพ

ปุ่มควบคุมด้านหน้าจอภาพ

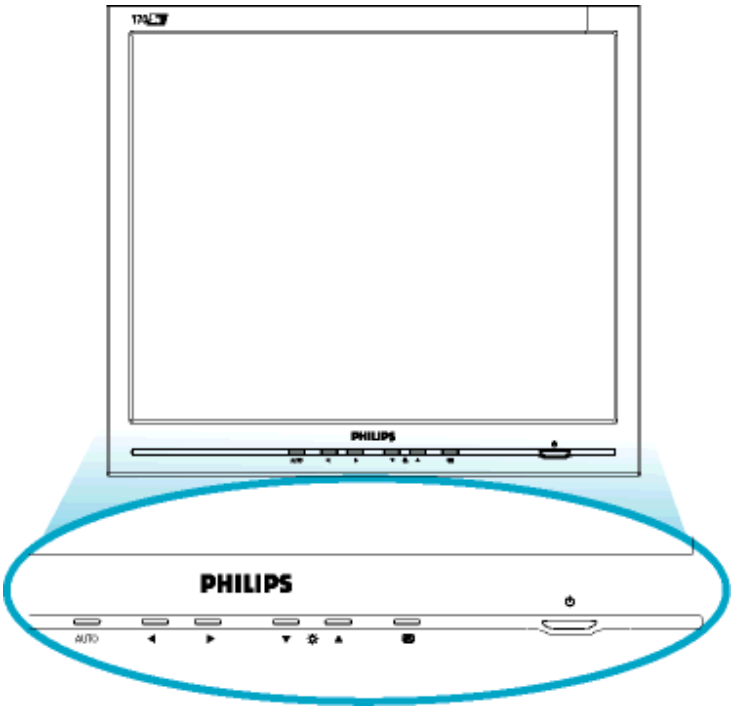

ใช้ปุ่มนี้เพื่อปรับค่าตัวเลขของรายการที่ปรากฏบนหน้าจอ

ใช้ปุ่มนี้เพื่อเลื่อนไปยังรายการที่ต้องการปรับค่า

"เร่ง" ปุ่มนี้เพื่อเปิดหน้าต่าง BRIGHTNESS (ความสว่าง). ใช้ปุ่มนี้เพื่อเลื่อนไปยังรายการที่ต้องการปรับค่าความสว่าง (BRIGHTNESS).

ใช้ปุ่มนี้เพื่อเปิดใช้งานรายการที่ต้องการปรับค่า OK ใช้ปุ่มนี้เพื่อเลื่อนไปยังรายการที่ต้องการปรับค่า

ใช้ปุ่มนี้เพื่อเปิดหรือปิด POWER (ไฟเปิดเครื่อง) ใช้ปุ่มนี้เพื่อเปิดใช้งานการตั้งค่าจอภาพ

AUTO

ใช้ปุ่มนี้เพื่อเปิดใช้งานการตั้งค่าอัตโนมัติ ใช้ปุ่มนี้เพื่อเปิดใช้งานการตั้งค่าจอภาพ ใช้ปุ่มนี้เพื่อเปิดใช้งานการตั้งค่าอัตโนมัติ, ใช้ปุ่มนี้เพื่อเปิดใช้งานการตั้งค่าจอภาพ ใช้ปุ่มนี้เพื่อออกจากเมนูการตั้งค่าจอภาพ.

ย้อนกลับไปยังด้านบนของหน้า

ข้อมูลทั่วไป

ɹ ls ˜ ˜ ˜

[illegible]
[illegible]
[illegible]
[illegible]
[illegible]
[illegible]

[illegible]

[illegible]

[illegible] ?

[illegible] Philips [illegible] . [illegible] [illegible] [illegible]

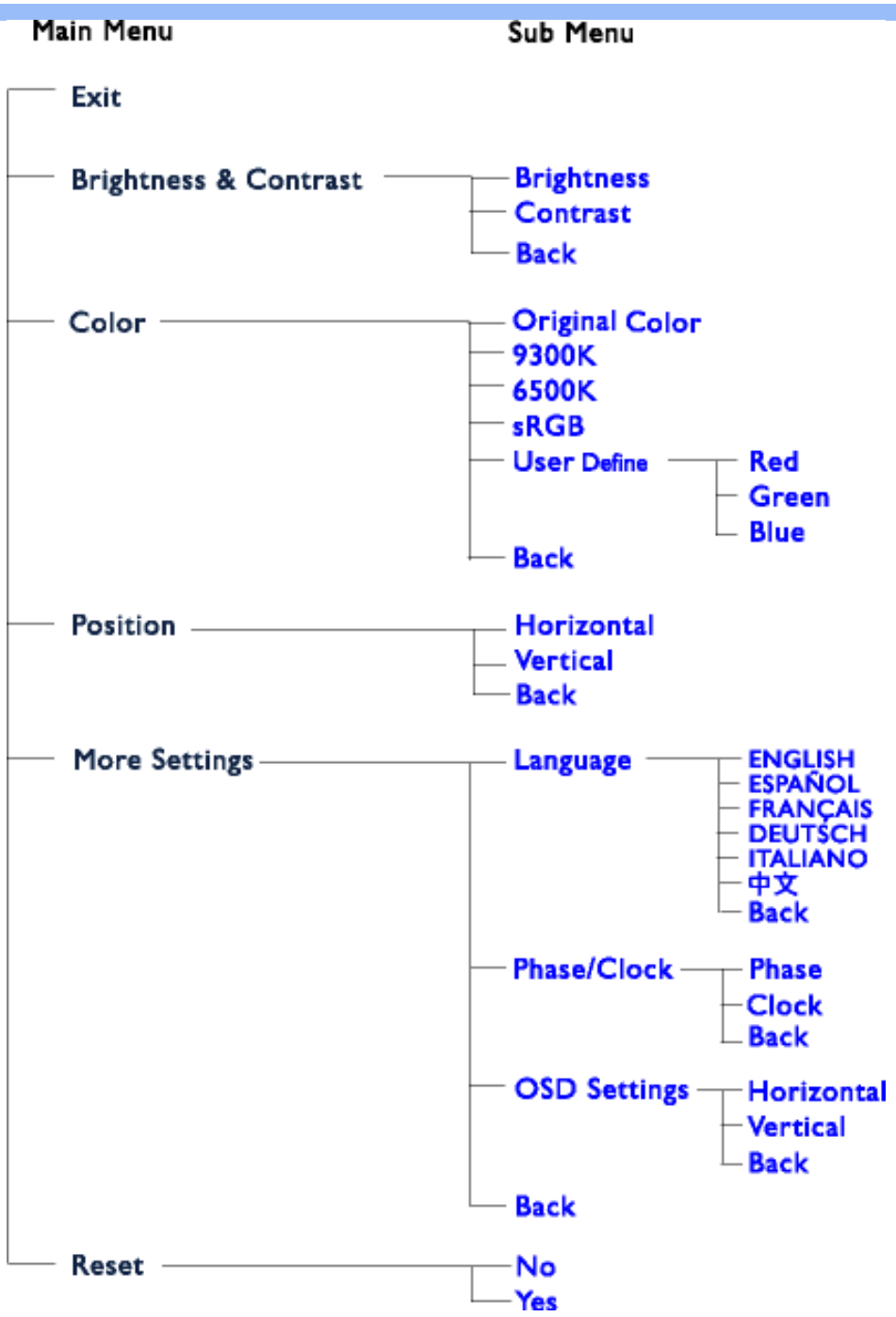

l tacfdzjuQodzfj: sRGB ï ⅊lsts frjsOdzaOtds, tsBjfrjfjuqfaO⁴ ʰ cf? ⅊tstdcj⅊lsdz? tsBdzjdzupjlstsots? cfdz⅊ tstcdzOupfj? dzjx⅊Hlz taOldzfudz dzf lzfrjstds?frjsOdzf (dz⅊jtacfdzjtc, upf⅊ tdsBr dzf ⅊Odzjtcodzf, dzsdz⅊lststcOdzf, tjtacfdzjtcodzf, frj⅊Odzjtcodzf cf lstj.)

R frjjtsdz⅊ltsBOdzfj frjsOdzaOtdsdzsdts lzdz⅊ cfupftdsBOdzdzsdts upjlstsBtsdts tjtdsfrjstcOdzjsBO sRGB tjtsLBtsdz⅊jls ⅊tstdcj⅊lsdzs tslstsBtcO⅊lOls cf⅊ltsBtcO⅊ljdz⅊ frjsRGB-frjsBdzjfrjsfdz ⅊ lzfrjstds?frjsB dz⅊dzjsdz⅊lststcO⅊ Philips, frjsBdzjfrjsfdz ⅊ frjsRGB. uO⅊cfdz⅊tsBtcOltsdz upjlsO⅊Odzf⅊Btdz⅊ lsfrjw cf tsBjfrjfjuqfaOjlsfrjw lstsudz⅊w tjjtcjHOuO upjlstsB dz⅊ ⅊tcOdzj dzjsdz⅊lststcO.

l tacf cfrjjtsdz⅊ltsBOdzfcf sRGB aO⅊ldzs lzfrjsOdzsBcflsw tstjtcjHjdzjdzdz⅊j, w cf⅊frjjtdsBOdzdz⅊j ⅊ldz⅊ujdz⅊w wtc⅊tsfrjsf cf ⅊tsdzstcOfrjsdzsfrjsf, OlsO⅊⅊lj upjlstsBtsdts ts⅊aOlsO dzjsdz⅊lststcO. l tsw lstsdz⅊aO⅊ldzs ar Btc⅊lsw dz⅊frjstds?⅊lz sRGB tjtacf tjtsdzjsh cf ⅊tcOdzdzsdts dzjjdz⅊ dzjsdz⅊lststcO.

r dzw a⅊dz⅊ ujdz⅊w ⅊lsts? w lzdz⅊upfcf tslsdtds?lsj ⅊tcOdzdzsj dzjjdz⅊, dz⅊⅊lOa ⅊dzstj⅊lz OK dz⅊tjjtcjHdzj? tjOdzjdzf dzjsdz⅊lststcO. l O⅊ldzjflsj ⅊dzstj⅊lz adz⅊L, ufstsBr tjjtcj?lsf ⅊ tjlzdz⅊lsz Color (Λ ajls) cf frjdzsOdz⅊lzjflsj ⅊dzstj⅊lz OK. R frjjtsdz⅊lz?lsj frjstslsBjlsfrjsBlz⅊ ʰ lz⅊ ⅊dzstj⅊lz, ufstsBr tjjtcj?lsf ⅊ tjlzdz⅊lsz sRGB. l O⅊ldzjflsj ⅊dzstj⅊lz adz⅊L cf frjdzsOdz⅊lzjflsj ⅊dzstj⅊lz OK, ufstsBr ar ?lsf cfL ⅊tcOdzdzsdts dzjjdz⅊.

6500K.

ʃ ʁfɲɟdzʏɩ ɗɘʊdzʃj tʃtsʢlzʃʊlsʝdzʝʔ ɗ ɡʊtɕʊdzʃʔdzʃʝ tsʁfɲɟdzʏɩ ɗɘʊdzʃj

ɟ ʒ ɾ [t R ʊ[ɟ ɸʒ ʊ ʜʊ[ɸɩ ʊ/t [ɟR ʃ ɩ , ʏʊ ʃ ɾ ʒ ʃ ɩ ɩ ɸʢʃ ʃ R ʊʔʜʃ ʜ ʊʜ ʃ ʃ ɟ R ʃ R
ɟɸ[ɸɩ ʊRR ɩ ɸ ɬ [R ʃ ɾ [[ʊ[ɩ ɩ ʃ [ɟ ɸ ʃ R ʃ ɾ ʃ [ʊ[ʃ ɟ ɸɩ R [

ɩ ɸɬ ɸ[ɩ ɸʃ [ɟ [ʃ ɬ ɸ: ɸ ɘfɲʃstɕʃʷ • ɾ ɟ dzʔ ɕʃʷ • ʢ ʃʃʃtɕ • [ʊdzʃʷ • ʌ tɕʊdzʃʃʷ • ɟ ɟ tɕɕʒʊdzʃʷ • ɟ tɕɟ ɩʃʃʷ
• ʌ ʃdzʃʔʷ dzʃʃʷ • R tɕdʔʊdzʃʃʷ • R lʢʊdzʃʷ • ʃ ʁ ʢfɲɟ dzʒ lztɕɕ • ɩ ʃH ɟ tɕdʔʊdzʃʃʳ • ɩ tstɕɘ ɟ ɕʃʷ •
ɬ tstʃʃstzɕʊdzʃʷ • ʔ ɘ ɟ ɩʃʃʷ • ʔ ɘ ɟ ʔ ɩʊtɕʃʷ • R fɲɟʊdzʃʷ • ɟ ɟ dzʃʢtsʁ tɕʃʃʃʷ

ɟ ʃ ʜʊʃ ʏɩ ɸʃ [ɟ [ʃ ɬ ɸ: ʏ ɟ ̈tsfɲɟdzʃsɘʊʢʃʃʷ • ɟ ɟ dzʃʃtɕʃʷ • ɬ tsdzʰ ʊ • [tsfɲfɲɟʃʷ ʜ dzʃsɘʊʢʃʃʷ
ʜ dzʃsɘ ɟ dzʃʃʷ • ʊ lzʃtɕ ɩʃʃʷ

ʃ ɸʊʀɩ ʜʢɸʃʃ ɸʃ [ɟ [R ʢɸ: ɸ dzʃʃʃʃdz fɲʢʃʃɟ tsfɲɟstʃʃsɘʊ • ɸ tɕɕɟ dzʃʃʃʃdzʃʃʃ • ɾ tɕʊ ʃʃʃdzʃʷ • ʏ ʃʃʃdzʃ •
ʢ tsʃʃdzʃʃdzʒʃʃʷ • ʃ ɟ ʢfɲɟʢʊ • ɬ ʊtɕʊɕɘʊ • ɬ ɟ tɕdz • ʊ tɕdzɕɘʊ • ɟ ɟ dzɟfɲʔ dzʃʊ

ʜ [ɟ [ɩ ɸʃ ɸʃ [ɟ [R ʢɸ: ʢ ʊdzʃʃʃʃ • ʜ ʔ ɸ

ʊʀʌʃ ʃ ʢ[ɸɩ ʜʢʀʁ [[ɟR ʃ ɩ : ɸ ɘfɲʃstɕʊdzʃʷ • ɩ tsɘʊʷ ɩ ɟ dzʃʊdzʃʃʷ

ɸɩ R ʃ : ɾ ʊdzʃdzʃʃʃɟʰ • ʢ ʃʃɩsʊʃʃ • ɟ tsdzʃʃtsdzʃʃ • R dzʃʃʃʷ • R dzʃʃtsdzɟ L ʃʷ • ʃ tʃtsdzʃʃʷ • ʢ tstɕɟʷ • ʃ ʊdzʃʃʃ L ʃʷ
• ɬ ʊʢʃʃfɲɟsʊdzʃ • ʌ ʃdzʃʃtʃtʃʃdzʃʃ • ʜ ʃdzʃʃʊʃlztɕ • ʊʊʃʃɘʊdzʃʃ • ʊʊʃdzʃʊdzʃʃ

ɸʌ [R ʢɸ: ʃ ʊdtsʢʢtsʢ • ʔ ɟ dzʃʃʷ ɸʷ tɕʃʢʊ

ʜ [ɟ [ɩ R ʁ ɟ ʃ ʜʊʃ ʢ: ɾ lzʁʊʃʃ • ɾ ɕʃʢʃɟ ɟ ɩs

[illegible]

A B C D E F G H I J K L M N O P Q R S T U V W X Y Z

A

Active matrix ([illegible])

[illegible] TFT ([illegible]).

Amorphous silicon (a-Si) ([illegible])

[illegible] (TFT) [illegible].

Aspect ratio ([illegible])

[illegible] 4:3. [illegible] 16:9 [illegible] 16:10.

[illegible]

B

Backlight ([illegible])

[illegible] TFT [illegible].

Brightness ([illegible])

[illegible]

ﻭﻳﺘﻜﻮﻥ ﻫﺬﻩ ﺍﻟﺸﺮﻳﺤﺔ ﻣﻦ ﺍﻟﺒﻜﺘﻴﺮﻳﺎ ﺍﻟﺴﺎﻟﺒﺔ ﻭﺍﻟﺒﻜﺘﻴﺮﻳﺎ ﺍﻟﻤﻮﺟﺒﺔ. ﻭﻟﻬﺬﺍ ﻓﺈﻥ ﺍﻟﺒﻜﺘﻴﺮﻳﺎ ﺍﻟﺴﺎﻟﺒﺔ ﺗﻨﻤﻮ ﻋﻠﻰ ﻫﺬﻩ ﺍﻟﺸﺮﻳﺤﺔ ﺑﺴﺮﻋﺔ ﺃﻛﺒﺮ ﻣﻦ ﺍﻟﺒﻜﺘﻴﺮﻳﺎ ﺍﻟﻤﻮﺟﺒﺔ.

C

CCFL (ﺍﻟﻤﺼﺒﺎﺡ ﺍﻟﻔﻠﻮﺭﻱ ﺍﻟﺒﺎﺭد ﺍﻟﻜﺎﺗﻮﺩ)

ﻳﺴﺘﺨﺪﻡ ﺍﻟﻤﺼﺒﺎﺡ ﺍﻟﻔﻠﻮﺭﻱ ﺍﻟﺒﺎﺭد ﺍﻟﻜﺎﺗﻮﺩ ﻟﺘﺴﻠﻴﻂ ﺍﻟﻀﻮﺀ ﺍﻟﺨﻠﻔﻲ ﻋﻠﻰ ﺷﺎﺷﺎﺕ ﺍﻟﻌﺮﺽ ﺍﻟﺴﺎﺋﻠﺔ ﺑﺎﻟﺒﻠﻮﺭﻳﺎ. ﻳﺴﺘﺨﺪﻡ ﺍﻟﻤﺼﺒﺎﺡ ﺍﻟﻔﻠﻮﺭﻱ ﺍﻟﺒﺎﺭد ﺍﻟﻜﺎﺗﻮﺩ ﻟﺘﺴﻠﻴﻂ ﺍﻟﻀﻮﺀ ﺍﻟﺨﻠﻔﻲ ﻋﻠﻰ ﺷﺎﺷﺎﺕ ﺍﻟﻌﺮﺽ ﺍﻟﺴﺎﺋﻠﺔ ﺑﺎﻟﺒﻠﻮﺭﻳﺎ.

Chromaticity (ﺍﻟﺼﺒﻐﻴﺔ)

ﻳﺴﺘﺨﺪﻡ ﺍﻟﺼﺒﻐﻴﺔ ﻟﻮﺻﻒ ﺍﻟﻠﻮﻥ ﺑﺪﻭﻥ ﺍﻟﺘﻌﺮﺽ ﻟﺸﺪﺗﻪ. ﺍﻟﺼﺒﻐﻴﺔ ﻫﻲ ﺍﻟﺼﻔﺎﺕ ﺍﻟﺘﻲ ﺗﺤﺪﺩ ﺟﻮﺩﺓ ﺍﻟﻠﻮﻥ، ﺍﻟﺼﺒﻐﻴﺔ ﻫﻲ ﺍﻟﺼﻔﺎﺕ ﺍﻟﺘﻲ ﺗﺤﺪﺩ ﺟﻮﺩﺓ ﺍﻟﻠﻮﻥ، ﺍﻟﺼﺒﻐﻴﺔ ﻫﻲ ﺍﻟﺼﻔﺎﺕ ﺍﻟﺘﻲ ﺗﺤﺪﺩ ﺟﻮﺩﺓ ﺍﻟﻠﻮﻥ.

CIE (Commission International de l'Eclairage)

ﺍﻟﻠﺠﻨﺔ ﺍﻟﺪﻭﻟﻴﺔ ﻟﻠﺘﻨﻤﻴﺔ ﺍﻟﺼﻨﺎﻋﻴﺔ ﻫﻲ ﻣﻨﻈﻤﺔ ﺩﻭﻟﻴﺔ ﺗﻌﻨﻰ ﺑﺎﻟﺘﻨﻤﻴﺔ ﺍﻟﺼﻨﺎﻋﻴﺔ ﻭﺍﻟﺘﻌﺮﻳﻒ، ﻭﻫﻲ ﺍﻟﺘﻲ ﺗﻘﻮﻡ ﺑﺘﺤﺪﻳﺪ ﺍﻟﺼﻔﺎﺕ ﺍﻟﺘﻲ ﺗﺤﺪﺩ ﺟﻮﺩﺓ ﺍﻟﻠﻮﻥ.

Color temperature (ﺍﻟﺤﺮﺍﺭﺓ ﺍﻟﻠﻮﻧﻴﺔ)

ﺍﻟﺠﺪﻭﻟﺔ ﺍﻟﺘﺎﻟﻴﺔ ﺗﻌﺮﺽ ﺍﻟﺤﺮﺍﺭﺓ ﺍﻟﻠﻮﻧﻴﺔ ﺍﻟﺘﻲ ﺗﺼﺪﺭﻫﺎ ﺍﻟﻌﺪﻳﺪ ﻣﻦ ﺍﻟﻤﺼﺎﺩﺭ ﺍﻟﻤﺨﺘﻠﻔﺔ. ﺍﻟﺤﺮﺍﺭﺓ ﺍﻟﻠﻮﻧﻴﺔ (ﺑﺎﻟﺪﺭﺟﺎﺕ ﺍﻟﻤﺌﻮﻳﺔ). ﺍﻟﺘﺼﻤﻴﻢ ﺍﻟﺬﻱ ﻳﺴﺘﺨﺪﻡ ﺍﻟﺤﺮﺍﺭﺓ ﺍﻟﻠﻮﻧﻴﺔ 2400ﺩ ﻣﺴﺘﺴﻬﻞ ﺍﻟﺴﻬﺮﺓ، ﺑﻴﻨﻤﺎ ﺍﻟﺘﺼﻤﻴﻢ ﺍﻟﺬﻱ ﻳﺴﺘﺨﺪﻡ 9300ﺩ ﻣﻨﺎﺳﺐ ﻟﻠﺘﺼﻮﻳﺮ ﺍﻟﻔﻮﺗﻮﻏﺮﺍﻓﻲ. ﺍﻟﺘﺼﻤﻴﻢ ﺍﻟﺬﻱ ﻳﺴﺘﺨﺪﻡ 6504ﺩ ﻫﻮ ﺍﻟﺘﺼﻤﻴﻢ ﺍﻟﻤﺴﺘﺨﺪﻡ Philips ﺑﺸﻜﻞ ﺍﻓﺘﺮﺍﻀﻲ ﻟﻠﺘﺼﻮﻳﺮ ﺍﻟﻔﻮﺗﻮﻏﺮﺍﻓﻲ 9300ﺩ، 6500ﺩ ﻣﻨﺎﺳﺐ ﻟﻠﺘﺼﻮﻳﺮ ﺍﻟﺴﻴﻨﻤﺎﺋﻲ.

Contrast (ﺍﻟﺘﺒﺎﻳﻦ ﺍﻟﺼﻮﺭﻱ)

ﻫﻮ ﺍﻟﻔﺮﻕ ﺑﻴﻦ ﺍﻟﻠﻮﻥ ﺍﻟﺒﺎﺭد ﺍﻟﻜﺎﺗﻮﺩ ﻭﺍﻟﻠﻮﻥ ﺍﻟﻤﻮﺟﺒﺔ.

Contrast ratio (ﻧﺴﺒﺔ ﺍﻟﺘﺒﺎﻳﻦ ﺍﻟﺼﻮﺭﻱ)

ﺍﻟﻨﺴﺒﺔ ﺑﻴﻦ ﺍﻟﻠﻮﻥ ﺍﻟﺴﺎﻃﻊ ﻭﺍﻟﻠﻮﻥ ﺍﻟﻐﺎﻣﻖ ﻭﺍﻟﻨﺴﺒﺔ ﺑﻴﻦ ﺍﻟﻠﻮﻥ ﺍﻟﺒﺎﺭد ﺍﻟﻜﺎﺗﻮﺩ ﻭﺍﻟﻠﻮﻥ ﺍﻟﻤﻮﺟﺒﺔ.

D

D-SUB

[illegible] VGA. [illegible] D-Sub.

Digital Visual Interface (DVI)

[illegible]

[illegible] (DVI) [illegible]

[illegible]

[illegible]

[illegible]

1. [illegible]
2. [illegible]

[illegible]

E

Energy Star Computers Programme

[illegible] Energy Star

[illegible]

ﻫﻮﻳﺔ ﺍﻟﺼﻮﺭﺓ ﻭﺍﻟﺘﻲ ﺗﺤﺪﺩ ﺍﻟﺼﻮﺭﺓ ﺍﻟﺮﻗﻤﻴﺔ ﺑﺎﻟﻨﺴﺒﺔ ﻟﻠﻌﺮﺽ ﻭﺍﻟﻄﺒﺎﻋﺔ ﻭﺍﻟﺘﺨﺰﻳﻦ ﻭﺍﻟﺘﻲ ﺗﺘﻜﻮﻥ ﻣﻦ ﺍﻟﺒﻜﺴﻞ ﻭﺍﻟﺪﻗﺔ ﻭﺍﻟﻌﻤﻖ ﺍﻟﻠﻮﻧﻲ ﻭﺍﻟﺘﻲ ﺗﺤﺪﺩ ﺍﻟﺼﻮﺭﺓ ﺍﻟﺮﻗﻤﻴﺔ ﺑﺎﻟﻨﺴﺒﺔ ﻟﻠﻌﺮﺽ ﻭﺍﻟﻄﺒﺎﻋﺔ ﻭﺍﻟﺘﺨﺰﻳﻦ.

ﺍﻟﻌﻮﺩﺓ ﺇﻟﻰ ﺃﻋﻠﻰ ﺍﻟﺼﻔﺤﺔ

G

Gamma (ﺟﺎﻣﺎ)

ﻫﻮ ﺍﺳﻢ ﻟﻌﻤﻠﻴﺔ ﺗﺼﺤﻴﺢ ﺍﻟﺼﻮﺭﺓ ﺍﻟﺮﻗﻤﻴﺔ ﺑﺤﻴﺚ ﺗﻌﺮﺽ ﺍﻟﺼﻮﺭﺓ ﺍﻟﺮﻗﻤﻴﺔ ﺑﺸﻜﻞ ﺻﺤﻴﺢ ﻋﻠﻰ ﺍﻟﺸﺎﺷﺎﺕ ﺍﻟﺘﻲ ﺗﺨﺘﻠﻒ ﻋﻦ ﺍﻟﺸﻜﻞ ﺍﻟﺬﻱ ﺗﻌﺮﺽ ﺑﻪ ﺍﻟﺼﻮﺭﺓ ﺍﻟﺮﻗﻤﻴﺔ ﺑﺎﻟﻨﺴﺒﺔ ﻟﻠﻌﺮﺽ ﻭﺍﻟﻄﺒﺎﻋﺔ ﻭﺍﻟﺘﺨﺰﻳﻦ. ﻭﻫﻲ ﺗﺴﺎﻭﻱ ﺍﻟﺮﻗﻢ ٢,٢ ﻟﻠﺸﺎﺷﺎﺕ ﺍﻟﺘﻲ ﺗﺴﺘﺨﺪﻡ ﺍﻟﺘﺮﻣﻴﺰ ﺍﻟﺴﻠﻜﻲ ﻟﻠﺼﻮﺭ.

Grayscale (ﺑﺪﺭﺟﺎﺕ ﺍﻟﺮﻣﺎﺩﻱ)

ﻫﻲ ﺻﻮﺭﺓ ﺗﺘﻜﻮﻥ ﻣﻦ ﺍﻟﻠﻮﻥ ﺍﻟﺮﻣﺎﺩﻱ ﻓﻘﻂ ﻭﺗﺴﺘﺨﺪﻡ ﻟﺘﻤﺜﻴﻞ ﺍﻟﺼﻮﺭ ﺍﻟﺒﻴﻀﺎﺀ ﻭﺍﻟﺴﻮﺩﺍﺀ ﻭﺍﻟﺮﻣﺎﺩﻳﺔ ﺑﺪﺭﺟﺎﺗﻬﺎ ﺍﻟﻤﺨﺘﻠﻔﺔ. ﻭﺗﺴﺘﺨﺪﻡ ﻫﺬﻩ ﺍﻟﺼﻮﺭ ﺑﺸﻜﻞ ﺃﺳﺎﺳﻲ ﻓﻲ ﺍﻟﺘﻠﻔﺎﺯ ﺍﻟﺮﻣﺎﺩﻱ ﻭﺍﻟﺘﺼﻮﻳﺮ ﺍﻟﺮﻣﺎﺩﻱ ﻭﺍﻟﺘﻲ ﺗﺘﻜﻮﻥ ﻣﻦ 8 ﺑﺘﺎﺕ ﻟﻜﻞ ﻟﻮﻥ ﺃﺳﺎﺳﻲ ﺃﻱ ﺃﻥ ﻫﻨﺎﻙ $2^8 = 256$ ﺩﺭﺟﺔ ﻟﻜﻞ ﻟﻮﻥ. ﺃﻣﺎ ﺑﺎﻟﻨﺴﺒﺔ ﻟﻠﺼﻮﺭ ﺍﻟﻤﻠﻮﻧﺔ ﻓﺈﻥ ﻫﻨﺎﻙ ٣ ﺃﻟﻮﺍﻥ ﺃﺳﺎﺳﻴﺔ ﻫﻲ R.G.B. ﻟﻜﻞ ﻟﻮﻥ ﻣﻨﻬﺎ 256 ﺩﺭﺟﺔ ﻟﺬﻟﻚ ﻓﺈﻥ ﺍﻟﺼﻮﺭﺓ ﺍﻟﺘﻲ ﺗﺴﺘﺨﺪﻡ ﻫﺬﻩ ﺍﻟﺪﺭﺟﺎﺕ ﺍﻟﺴﺎﺑﻘﺔ ﺍﻟﺘﻲ ﺗﺘﻜﻮﻥ ﻣﻦ 256x256x256= 16,7 ﻣﻠﻴﻮﻥ ﻟﻮﻥ.16,7

ﺍﻟﻌﻮﺩﺓ ﺇﻟﻰ ﺃﻋﻠﻰ ﺍﻟﺼﻔﺤﺔ

H

Hue (ﺍﻟﻠﻮﻥ ﺍﻟﺴﺎﺋﺪ)

ﻫﻮ ﺍﻟﻠﻮﻥ ﺍﻟﺴﺎﺋﺪ ﺍﻟﺬﻱ ﻳﺤﺪﺩ ﺍﻟﻠﻮﻥ ﺍﻟﺬﻱ ﺗﺮﺍﻩ ﺍﻟﻌﻴﻦ ﺍﻟﺒﺸﺮﻳﺔ. ﻭﻫﻮ ﺍﻟﺬﻱ ﻳﺤﺪﺩ ﺍﻟﻠﻮﻥ ﺍﻟﺴﺎﺋﺪ ﺍﻟﺬﻱ ﻳﺮﺍﻩ ﺍﻟﺴﺎﺋﻖ ﺍﻟﺬﻱ ﻳﻘﻮﺩ ﺍﻟﺴﻴﺎﺭﺓ. ﻭﻫﻲ ﺗﺴﺎﻭﻱ ﺍﻟﺮﻗﻢ ٢,٢ ﻟﻠﺸﺎﺷﺎﺕ ﺍﻟﺘﻲ ﺗﺴﺘﺨﺪﻡ ﺍﻟﺘﺮﻣﻴﺰ ﺍﻟﺴﻠﻜﻲ ﻟﻠﺼﻮﺭ. ﻭﺑﺎﺳﺘﺨﺪﺍﻡ ﻫﺬﻩ ﺍﻟﺼﻴﻐﺔ ﻓﺈﻥ ﻫﻨﺎﻙ ٣ ﺃﻟﻮﺍﻥ ﺃﺳﺎﺳﻴﺔ ﻫﻲ ﺍﻟﺘﻲ ﺗﺴﺘﺨﺪﻡ ﻟﺘﻤﺜﻴﻞ ﺍﻟﺼﻮﺭ ﺍﻟﺒﻴﻀﺎﺀ ﻭﺍﻟﺴﻮﺩﺍﺀ ﻭﺍﻟﺮﻣﺎﺩﻳﺔ ﺑﺪﺭﺟﺎﺗﻬﺎ ﺍﻟﻤﺨﺘﻠﻔﺔ.

ﺍﻟﻌﻮﺩﺓ ﺇﻟﻰ ﺃﻋﻠﻰ ﺍﻟﺼﻔﺤﺔ

I

IPS (In Plane Switching - ﺗﺒﺪﻳﻞ ﺍﻟﺴﺎﺋﻞ ﺍﻟﺒﻠﻮﺭﻱ)

υμπιεζόμενο αέριο υπό πίεση μπορεί να εκρηγνύεται, εάν η θερμοκρασία αυξηθεί πολύ. Μη τρυπάτε ή καίτε τα δοχεία υγραερίου, ακόμη και αν θεωρείτε ότι είναι άδεια.

Ζητείται η μετάφραση στα ελληνικά

L

LCD (Υγρό Κρυσταλλικό Φωτεινοδίοδο)

Υγρό Κρυσταλλικό Φωτεινοδίοδο, ή οθόνη υγρών κρυστάλλων, η οποία χρησιμοποιείται σε πολλές ψηφιακές συσκευές. Υγρό Κρυσταλλικό Φωτεινοδίοδο σημαίνει ότι η οθόνη αποτελείται από υγρό κρύσταλλο φωτεινοδίοδο. Τα υγρά κρύσταλλα δεν εκπέμπουν φως από μόνα τους αλλά χρειάζονται φωτεινή πηγή. Η τεχνολογία αυτή χρησιμοποιείται σε ρολόγια, ψηφιακές συσκευές μέτρησης, φορητές κονσόλες παιχνιδιών, οθόνες υπολογιστών, τηλεοράσεις κ.ά.

Liquid crystal (Υγρό Κρυσταλλικό)

Η ουσία αυτή βρίσκεται σε μια κατάσταση μεταξύ στερεού και υγρού. Υγρό Κρυσταλλικό. Υγρά κρύσταλλα χρησιμοποιούνται σε πολλές ψηφιακές συσκευές. Τα υγρά κρύσταλλα δεν εκπέμπουν φως από μόνα τους αλλά χρειάζονται φωτεινή πηγή. Υπάρχουν δύο κύριοι τύποι υγρών κρυστάλλων: Υγρά κρύσταλλα φωτεινοδίοδο και Υγρά κρύσταλλα φωτεινή πηγή. Η τεχνολογία αυτή χρησιμοποιείται σε ρολόγια, ψηφιακές συσκευές μέτρησης, φορητές κονσόλες παιχνιδιών, οθόνες υπολογιστών, τηλεοράσεις κ.ά.

Υγρό Κρυσταλλικό

Ο τύπος υγρών κρυστάλλων που χρησιμοποιούνται σε ψηφιακές συσκευές. Υγρά κρύσταλλα φωτεινοδίοδο. Υγρά κρύσταλλα φωτεινή πηγή. Η τεχνολογία αυτή χρησιμοποιείται σε ρολόγια, ψηφιακές συσκευές μέτρησης, φορητές κονσόλες παιχνιδιών, οθόνες υπολογιστών, τηλεοράσεις κ.ά.

Ζητείται η μετάφραση στα ελληνικά

N

Nit (Νιτ)

Μονάδα μέτρησης φωτεινότητας ίση με 1 Cd/m2 δηλαδή 0,292 W ανά τετραγωνικό μέτρο.

Ζητείται η μετάφραση στα ελληνικά

P

Pixel (Πιξελ)

Ονομάζεται η μικρότερη μονάδα εικόνας σε μια οθόνη. Pixel σημαίνει PICture Element ή Στοιχείο Εικόνας. Η τιμή αυτή

ประกอบด้วยแผ่นโพลาไรซ์ที่ตั้งฉากซึ่งกันและกัน

Polarizer (ตัวกรองแสงโพลาไรซ์)

ตัวกรองแสงโพลาไรซ์ที่ใช้ในจอภาพแบบแอกทีฟเมทริกซ์ทั้งหมดจะส่งผลต่อคุณภาพของแสงที่ส่งผ่านไปยังจอภาพ ดังนั้นจึงมีความจำเป็นต้องใช้ตัวกรองแสงโพลาไรซ์ที่ดีเพื่อให้ได้ภาพที่มีคุณภาพสูงสุด ตัวกรองแสงโพลาไรซ์ที่ใช้ในจอภาพแบบแอกทีฟเมทริกซ์ส่วนใหญ่จะเป็นชนิดที่ส่งแสงโพลาไรซ์ในแนวตั้งฉากกับพื้นผิวของจอภาพ ซึ่งเป็นมุมที่ 90 องศา ในขณะที่ตัวกรองแสงโพลาไรซ์ที่ใช้ในจอภาพแบบแพสซีฟเมทริกซ์ส่วนใหญ่จะเป็นชนิดที่ส่งแสงโพลาไรซ์ในแนวนอนกับพื้นผิวของจอภาพ

ตัวกรองแสงโพลาไรซ์ที่ใช้ในจอภาพแบบแอกทีฟเมทริกซ์ส่วนใหญ่จะเป็นชนิดที่ส่งแสงโพลาไรซ์ในแนวตั้งฉากกับพื้นผิวของจอภาพ

R

Refresh rate (อัตราการรีเฟรช)

อัตราการรีเฟรชคือความถี่ที่จอภาพแบบแอกทีฟเมทริกซ์ทำการรีเฟรชข้อมูลบนหน้าจอ ซึ่งโดยทั่วไปจะวัดเป็นหน่วยเฮิร์ตซ์ (Hz) ตัวอย่างเช่น อัตราการรีเฟรชที่ 60 เฮิร์ตซ์หมายความว่าจอภาพจะรีเฟรชข้อมูลบนหน้าจอ 60 ครั้งต่อวินาที

ตัวอย่างเช่น อัตราการรีเฟรชที่ 60 เฮิร์ตซ์หมายความว่าจอภาพจะรีเฟรชข้อมูลบนหน้าจอ 60 ครั้งต่อวินาที

S

sRGB

sRGB คือมาตรฐานสีที่ใช้กันอย่างแพร่หลายในอุตสาหกรรมคอมพิวเตอร์ ซึ่งช่วยให้มั่นใจได้ว่าสีที่แสดงบนอุปกรณ์ต่างๆ เช่น จอภาพ เครื่องพิมพ์ และกล้องดิจิตอล มีความสอดคล้องกันมากที่สุด (ดังนั้นจึงช่วยให้ผู้ใช้งานสามารถมั่นใจได้ว่าสีที่พวกเขาเห็นบนหน้าจอคอมพิวเตอร์ของตนเองจะมีลักษณะเหมือนกับสีที่พิมพ์ออกมาจากเครื่องพิมพ์ หรือสีที่ปรากฏในภาพถ่ายดิจิตอลที่ถ่ายด้วยกล้องดิจิตอลรุ่นเดียวกันเมื่อนำไปแสดงบนอุปกรณ์ต่างๆ ได้)

ระบบการจัดการสีที่ใช้มาตรฐาน sRGB ช่วยให้ผู้ใช้งานสามารถมั่นใจได้ว่าสีที่พวกเขาเห็นบนหน้าจอคอมพิวเตอร์ของตนเองจะมีลักษณะเหมือนกับสีที่พิมพ์ออกมาจากเครื่องพิมพ์ หรือสีที่ปรากฏในภาพถ่ายดิจิตอลที่ถ่ายด้วยกล้องดิจิตอลรุ่นเดียวกันเมื่อนำไปแสดงบนอุปกรณ์ต่างๆ ได้ ซึ่งเป็นประโยชน์อย่างมากสำหรับผู้ใช้งานที่ต้องการความแม่นยำสูงในการจัดการสี เช่น ช่างภาพมืออาชีพ นักออกแบบกราฟิก และผู้ผลิตสิ่งพิมพ์ต่างๆ ซึ่งมาตรฐาน sRGB ได้รับการพัฒนาขึ้นโดยบริษัท Hewlett-Packard และ Microsoft ร่วมกันเมื่อปีค.ศ. 1996 และได้รับการยอมรับจากองค์กรมาตรฐานต่างๆ ทั่วโลกในเวลาต่อมา

ในปัจจุบันมาตรฐาน sRGB ถูกนำไปใช้งานในอุปกรณ์ต่างๆ ที่รองรับการจัดการสีเป็นจำนวนมาก ซึ่งรวมถึงจอภาพ เครื่องพิมพ์ กล้องดิจิตอล และซอฟต์แวร์ต่างๆ ที่เกี่ยวข้องกับการจัดการภาพ ซึ่งช่วยให้ผู้ใช้งานสามารถมั่นใจได้ว่าสีที่พวกเขาเห็นบนหน้าจอคอมพิวเตอร์ของตนเองจะมีลักษณะเหมือนกับสีที่พิมพ์ออกมาจากเครื่องพิมพ์ หรือสีที่ปรากฏในภาพถ่ายดิจิตอลที่ถ่ายด้วยกล้องดิจิตอลรุ่นเดียวกันเมื่อนำไปแสดงบนอุปกรณ์ต่างๆ ได้ ซึ่งเป็นประโยชน์อย่างมากสำหรับผู้ใช้งานที่ต้องการความแม่นยำสูงในการจัดการสี

ในปัจจุบันมาตรฐาน sRGB ถูกนำไปใช้งานในอุปกรณ์ต่างๆ ที่รองรับการจัดการสีเป็นจำนวนมาก ซึ่งรวมถึงจอภาพ เครื่องพิมพ์ กล้องดิจิตอล และซอฟต์แวร์ต่างๆ ที่เกี่ยวข้องกับการจัดการภาพ ซึ่งช่วยให้ผู้ใช้งานสามารถมั่นใจได้ว่าสีที่พวกเขาเห็นบนหน้าจอคอมพิวเตอร์ของตนเองจะมีลักษณะเหมือนกับสีที่พิมพ์ออกมาจากเครื่องพิมพ์ หรือสีที่ปรากฏในภาพถ่ายดิจิตอลที่ถ่ายด้วยกล้องดิจิตอลรุ่นเดียวกันเมื่อนำไปแสดงบนอุปกรณ์ต่างๆ ได้ ซึ่งเป็นประโยชน์อย่างมากสำหรับผู้ใช้งานที่ต้องการความแม่นยำสูงในการจัดการสี

ในปัจจุบันมาตรฐาน sRGB ถูกนำไปใช้งานในอุปกรณ์ต่างๆ ที่รองรับการจัดการสีเป็นจำนวนมาก ซึ่งรวมถึงจอภาพ เครื่องพิมพ์ กล้องดิจิตอล และซอฟต์แวร์ต่างๆ ที่เกี่ยวข้องกับการจัดการภาพ ซึ่งช่วยให้ผู้ใช้งานสามารถมั่นใจได้ว่าสีที่พวกเขาเห็นบนหน้าจอคอมพิวเตอร์ของตนเองจะมีลักษณะเหมือนกับสีที่พิมพ์ออกมาจากเครื่องพิมพ์ หรือสีที่ปรากฏในภาพถ่ายดิจิตอลที่ถ่ายด้วยกล้องดิจิตอลรุ่นเดียวกันเมื่อนำไปแสดงบนอุปกรณ์ต่างๆ ได้ ซึ่งเป็นประโยชน์อย่างมากสำหรับผู้ใช้งานที่ต้องการความแม่นยำสูงในการจัดการสี

ﾟﾟﾟ

ﾖﾂのﾋﾞｼﾞﾈｽ

ｕｒｌをｃｏｐｙしてｂｌｏｇ、ｍｅｍｏなどに貼り付けるだけで、ﾌﾘｰﾍﾟｰｼﾞ、ﾌﾞﾛｸﾞ、ﾒﾙﾏｶﾞ、ｍｅｍｏなどに簡単に貼り付けることができます。

ﾖﾂのﾋﾞｼﾞﾈｽ -ｲﾍﾞﾝﾄ ﾖﾂのﾋﾞｼﾞﾈｽ ｕｒｌ ﾍﾙﾌﾟ"ｅｘｃｅｌ ｃｏｍｂｉｎｅ ﾌﾘｰﾀｲﾑ ﾋﾞｼﾞﾈｽ ﾌﾟﾛｸﾞﾗﾑ ﾌﾟﾛﾌｪｯｼｮﾅﾙ ﾂｰﾙ ﾖﾂのﾋﾞｼﾞﾈｽ

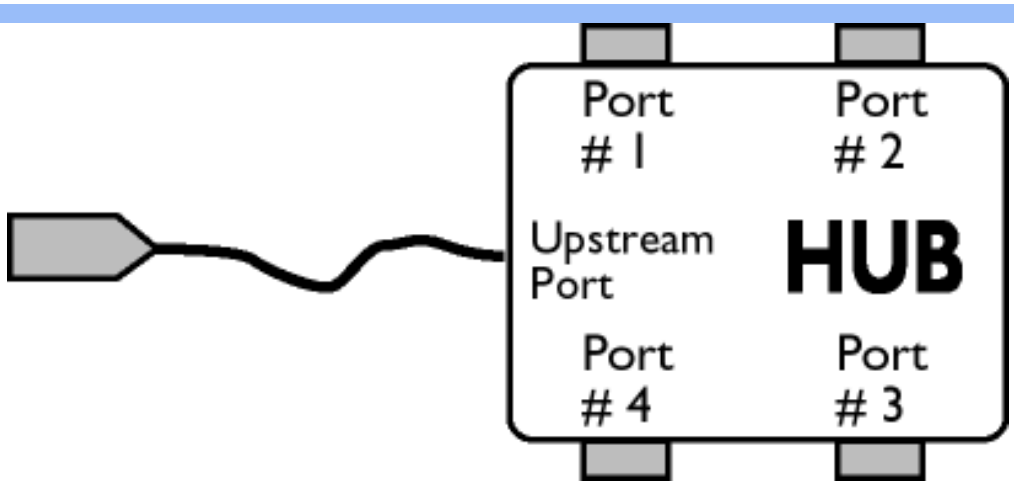

l cfrÇtsHwh ⊙v frpwLJ

l ⊙ftc⊙odzidzfj tftslsts⊙HOdzz ⊓ tsls odz⊙odzsdts tftdsujfrfrjstc⊙ l tstdsdzfrÇtsHwh j⊃ frpwLcf -ɨlsts ɨdzj⊙lstcfujfr⊙cf dz⊙cfBtsdzj lzHOdzidzz ⊃ tsls odz⊙odzsdts tftdsujfrfrjstc⊙tftstdsə ⊙tsdzujdzstc⊙lststcj, w tstcdzpftdzz h cf⊃ lstc⊙w cf⊙HOdzz ⊓ dzfrÇtsHwh j⊃ frpwLcf tsls⊙tsdzujdzstc⊙lststc⊙ l tstdsr dzfrÇtsHwh j⊃ frpwLcf tftcfdzfdz⊙s lslstc⊙w cf⊙HOdzz ⊓ ətsfrÇtsHwh j⊃ frpwLcf.

J tsfrÇtsHwh ⊙v frpwLJ

l ⊙ftc⊙odzidzfj tftslsts⊙HOdzz ⊓ tfts dz⊙ftc⊙odzidzfs ⊙ odz⊙odzsdzz tftdsujfrfrjstdz l tstdsətsfrÇtsHwh j⊃ frpwLcf -ɨlstsɨdzj⊙lstcfujfr⊙cf frÇdz ⊃ Bdzfk dzf⊃ ⊙ odz⊙odzsdzz tftdsujfrfrjstdz tftstdsə ⊙tsdzujdzstc⊙lststcj, w tstcdzpftdzz h cf⊃ lstc⊙w cf⊙HOdzz ⊓ ətsfrÇtsHwh j⊃ frpwLcf tsls⊙tsdzujdzstc⊙lststc⊙ l tstdsr ətsfrÇtsHwh j⊃ frpwLcf tftcfdzfdz⊙s lslstc⊙w cf⊙HOdzz ⊓ dzfrÇtsHwh j⊃ frpwLcf.

Ezyr lφ]ΩΗ n JφΑφ l S n φ] r l J r

V

Vertical refresh rate

Y ⊙frjs tsls ⊙tsə dzsə dzj dzfw ⊙Htdsə

J r tc⊙k⊙jdzsj ə ɨ l ɨ ucfrjdzs ⊙Htdsə (tftsdzz ⊓ cfLtsBtc⊙k j dz⊃), tcjdcfrjstcftdzzj dz ⊓ dz⊃ɨ⊙tcdzj ⊙k HlzS frjj⊙lzdzlz.

ξ γ ʁ]ρ η ∫φ ʌ φ] ς ρ φ] ґ ∫ ґ

R dbfjs⊙dbdbw ʊqdw
HtcO?ə¸jtcO
ə⊙h ¸jdts
dzjsdbqlsstcO fnj
r ¸s[
R dbfjstdbz⊙ʊqdq
tjfts L⊙dtdbzL⊙¸j dq
ər ə⊙tsHlz dbO
tj¸jʊ⊙ls
R dbfjs⊙dbdbw ʊqdw
tjfdtsdtcO⊙dzjdzj
FPadjust

ʅ ⊙dtdbzL⊙dq tj¸jʊ⊙ls

R dbfjs⊙dbdbw ʊqdw HtcO?ə¸jtcO HdbW ə⊙h ¸jdts dzjsdbqlsstcO fnjr ¸s[

Hqfrjs¸jdzjdb¸ ls tc¸jBtsə⊙dbqdw:

- ʅ ¸s fnjlzfrjs⊙dbsə⊙dzjdbdbs? tsj¸jtcO ʊqdtsdbdbs? fnjfrjs¸jdzjs? WindowsÈ 95, WindowsÈ 98, WindowsÈ 2000, WindowsÈ Me, WindowsÈ XP qdbz BtsdzjJ tjfts LHdzj? ə¸jtcfnjqd.
- ʅ ⊙?Hqls¸ HtcO?ə¸jtc".inf/.icm/.cat" ə ⊙ls⊙dbsdzj : lcd\pc\drivers

ʅ tc¸j⊳H¸j, ʊ¸jdzjtjfdtcqfrjszjfqls ¸ tsj¸jtcOʊqdq qdbfjs⊙dbdbw ʊqdq, ə dbqdzjls¸jdz dbs tsL dbO⊙tsdzj ls¸jfrj fnj ls¸⊙frjstsdzjw ⊙?dbO "Readme.txt".

[⊙dbdbO w frjstcO⊙dbqʊ⊙H⊙¸jlstjfts dzLtsə⊙ls¸jdbz ə tsL dzjs⊳dbsfrjs ʊls¸jdbqw tdbz⊙tsə tsHfrjsə⊙ə w tstcdzj⊙ls¸ N .pdf∫ .
∧ ⊙?dbz PDF dzjs⊳dbs tj¸jtc¸jdzjfrjsq dbO⊳¸jfrjs⊙q? Hqfrj⊙ə⊙h ¸jdts⊙tsdzjJ B ls¸jtcO, ⊙L⊙ls¸jdzjtjfdtsfrjdzjstc¸jls qd tcOfrj¸jʊ⊙ls⊙ls fnjtjfts dzjsh J B tjfdtsdtcO⊙dzjdzj Acrobat Reader qdbzə⊙h ¸j? tjfdtsdtcO⊙dzjdzj tjfdtsfrjdzjstcO (BtcO⊙bL¸jtcO).

[frjbz qtjfdtsdtcO⊙dzjdzj⊙Adobe Acrobat Reader dz¸ qdbfjs⊙dbdbzqfdtsə⊙dbO dbO ə⊙h ¸jdzj⊙tsdzjJ B ls¸jtc¸j, ər B¸jtcqfls¸j fnj tjfts dzjsh J B dzj h qd tjfts dzj¸h ¸jdbdbs dbq⊳¸j frjfrj dbOlz, ʊ¸jstsBr qdbfjs⊙dbdbzqfdtsə⊙ls ⊳ lsz tjfdtcq⊙dbO⊙HdbW tjfdtsdtcO⊙dzjdzjz. AdobeÈ Acrobat Reader for PC / AdobeÈ Acrobat Reader for Mac.

R dbfjs tdbz⊙ʊqdw tjfts L⊙dtdbzL⊙¸j:

[dbw L⊙dtdbzL⊙qdw ⊙?dbO ər tjfts dbdbqfls¸j frjbz¸HlzB h qd¸j tsj¸jtcO ʊqdq:

1. ʊfrjs⊙dbsə⊙qə ⊙¸lzfrjstcdzj h qd dbO tjfts dzj¸h ¸jdbdbs? dbq⊳¸j tjqd⊙¸lstsdtcO⊙dzjdzj, dbO⊳¸dzjqfls¸j qd lz⊳H¸jtc⊳¸qə⊙?ls¸j ⊙¸dbstj⊙¸lz dzj h qd ə dbO⊳¸⊙lstsdzjtjfts dbts⊳¸j dbqfqd. (ʅ tsdz L tsə⊙ls¸jdbz qd tsj¸jtcOʊqdtsdbdbs? frjqfrjs¸jdzj (¸ H) Win95/98/2000/Me/ XP qdfrjtsdz LlzB ls tjfdtcOə lzB ⊙¸dbstj⊙¸lz.)

ʅ ⊙dtdbzL qfls 170V6.pdf

2. ¸J tjfts wə qdə h ¸jdzjfrjw dzj¸dbz ər B¸jtcqfls¸j tjfzdbO⊙ls Save Link As... (H ts⊙dtcO⊙dbqfls frjfrj dbOlz⊙¸⊙⊙...), Save Target As... (H ts⊙dtcO⊙dbqfls ⊙Htc¸jfrj⊙ls⊙¸⊙⊙...) qdbz Download Link to Disk (ʅ ¸jtc¸jdzjfrjsq frjfrj dbOlz dbO Hqfr⊙).

3. ¸J r B¸jtcqfls¸j tj⊙tj⊙¸lz, ə ⊙¸tsls⊙tsdzB ər ⊙¸tsls⊙qfls¸j frjs⊙dtcO⊙dbqfls H⊙dbdbz? w ⊙?dbz L⊙ls¸jdzjtsls H⊙?ls¸j dzj h J B ⊙¸tsdzj⊙dbqfz Save (H ts⊙dtcO⊙dbqfls) (¸jfrjbz qfBlzH¸jls tjfdtc¸jHdbs⊳¸jdbs frjs⊙dtcO⊙dbqfls w ⊙?dbz⊙¸⊙⊙ N text∫ (ls¸⊙frjs) qdbz N source∫ (qfrjstsʊqdbq⊙¸), ər B¸jtcqfls¸j N qfrjstsʊqdbq⊙¸∫).

R dbfjs tdbz⊙ʊqdw tjfts ər ə⊙tsHlz dbO tj¸jʊ⊙ls J:

¸J r ə⊙tsH dbO tj¸jʊ⊙ls ls¸j⊙frjs⊙tdbz⊙tsə⊙tsHfrjsə⊙tsfrjz h ¸jfrjsə⊙dbw ¸jlsfrjw frjbz¸HlzB h qdqdzjtsBtcO⊙tsdzj

1. ¸ ls¢tcts¢ls¡ ˝ ˝ O¢dz frjs+¡ tc>| O^ cf¢ ls¡ ¢frjs tcdz¢ts ots+frjs O, cf, frpbz¡ +lz˝ cfdbjstcdz¢ ucf˝ cdzfts ar ots+lz dz¢ tf¡ ¡ucfls +cdz˝ ao^ ¡ cts tfcfdbs¡ tcO, ar o¡ +cf ls¡ dz¢ tf¡ ¡ucfls lstc¡ blz¡ cdz ¡ frjstcOdzf ucr tdz¢ts ots+frjs O.

ˇ ¸ ¸ ¡ ¢ ¢ ¡ ¢ ¡ ¢ ¡

ξyκ ιφ ιjση η ∫φλφ ιs σφ ι r ι ∫ r

Y ⊙fnjstts ə tsL dz[ʔ⊙ˣ ʰ d[¸ ə tstʃtatsfnj

∫ ¸ jtaʳ
B ¸ L tstʃ⊙fnjtatsfnjsd[,
tʃ tsd[fnʔ d[
lzfnjstatʊ⊙dzj dz[¸
dzj d[fnʃ tatʊ⊙ə dtatsfnjsj ʔ
Y ⊙fnjstts
ə tsL dz[ʔ⊙ˣ ʰ d[¸
ə tstʃ tatsfnj
ʔ ʔ tatʊ⊙dzdz ¸ j
ʷ ʷ lzdtʔ ʊ d[d[
tatʊ¸ dzdzd[tatsə ʔ d[
ʉ tsə dz¸ fnjsd[dz¸ tsfnjs
fnj H tatzatd[dz¸ d[
tʃ ¸ jtad[ʷ ʷ ¸ jtad[ʔ dz dz¸ d[
lzfnjstats ʔ fnjsə ⊙dz¸ d[
ʊ ¸ j ⊓ dtatsdzsatd[ʷ
d[L atststsə dz¸ dz[ʷ
r ʔ tʃ ⊙dz¸ dz¸ ʔ
ʉ ls⊙dz[⊙tats
ı tatsdtatsdz¸ d[ʔ d[,
ı ʔ tsdtsatd[d[d[
B ¸ L tstʃ⊙fnjtatsfnjsd[
ʅ tsd[fnʔ d[
lzfnjstatʊ⊙dzj dz[¸
dzj d[fnʃ tatʊ⊙ə dtatsfnjsj ʔ
ʅ tstatdz¸ ⊙ls d[ə dz ¸ j
H tsʔ lzdz¸ j dtatsʳ
[tatzatd[¸ j
dzj tsB ⊓ tsH d[dz¸ j
fnp ¸ j H ¸ j dz[ʷ

Y ⊙fnjstts ə tsL dz[ʔ⊙ˣ ʰ d[¸ ə tstʃ tatsfnj

J : Y lstts fnjdz¸ H lz¸ j ls H ¸ j dz⊙ls , ¸ ¸ fnjdz[tʃ tatʊ[lzfnjs⊙dtatsə ʔ ¸ j dz¸ tsdz[lststatʊ⊙dz⊙ı ʔ tatʊ⊙dz¸ tslstsB tatʊ⊙ı ⊙¸ j ls fnjʷ fnjstsBʰ ¸ j dz[¸ "Cannot display this video mode"(ʔ lstsls ə d[H ¸ j tstatʊ¸ j ı d[dz¸ ə tsfnjʃ tatsd[L ə ¸ j fnjsd[dz¸ ə tsL dz¸ tsı dtatsı)?

∫ : [¸ j ʔ tsdz¸ j dz[lz¸ j dz¸ ʔ ə d[H ¸ j tstatʊ¸ j ı d[dz¸ H dzʷ dz¸ tsdz[lststatsə Philips dz¸ tsH ¸ j dz¸ ʔ 17": 1280x1024, 60 ¸ ı ʊ.

/, ∫ lsfnjs¸ j H d[dz[lsj ə fnj ¸ ʔ ⊙B ¸ j dzd, L ⊙ls¸ j dz¸ tʃ tsH fnjs¸ j H d[dz[lsj ʅ ʔ ʔ dz¸ tsdz[lststdz, ʔ tslststaʳ ʔ d[fnʃ tsdz L tsə ⊙dtatsfnjʷ fnjdz[dz¸ tatʊ⊙dzʰ ¸ j d[dtatstatdz¸ ⊙dz dtatstatʊ⊙B tsls⊙dz

0, J dz¸ j dz¸ WindowsÈ Start (ı ⊙tʃ lzfnjʔ) ə ʳ B ¸ jtad[lsj tʃ lzdtʔ ls Settings/Control Panel (ı ⊙fnjstats ʔ ʔ d[/ʅ ⊙dz¸ j dz lzʃ tatʊ⊙ə dz¸ j dz[ʷ). J ts⊙dz¸ Control Panel (ʅ ⊙dz¸ j dz lzʃ tatʊ⊙ə dz¸ j dz[ʷ) ə ʳ B ¸ jtad[lsj tʃ d[ʔ tstatʊ⊙dz¸ dz¸ Display (ʔ ʔ tatʊ⊙dz¸ ı ⊙tʃ ⊙dz¸ j dz[lzʃ tatʊ⊙ə dz¸ j dz[ʷ ı ʔ tatʊ⊙dtatsdz¸ ə ʳ B ¸ jtad[lsj ʷ tadz ʔ Settings (ı ⊙fnjstats ʔ ʔ d[) . J tststsB tatʊ⊙ı ¸ j dz[dtatsdz¸ tʃ tsH ʷ tadz ʔ tsdz¸ Settings (ı ⊙fnjstats ʔ ʔ d[) ts⊙dz¸ , tsB tsL dz⊙ʊ¸ j dz[dtatsdz¸ "desktop area" (tsB dz⊙fnjs tatʊ⊙B tsʊ¸ j ⊙ts fnjstsdz⊙), tʃ ¸ jtad[ʔ dz¸ fnjs d[lsj fnʔ tsdz L ʷʰ d[ʔ lz⊙ʔ L ⊙ls¸ j dz dz⊙ə ⊙tad[⊙dtatsʳ 1280x1024 (17") ı dz¸ j dz¸ j dz[dtatsə d[L tsB tatʊ⊙ı ¸ j dz[ʷ.

1, ∫ ls⊙tats ʔ lsj ts⊙dtatsʳ Advanced Properties(ʊ fnjsə ¸ jtʰ ¸ j dz[dtatsə tsə ⊙dz[dz¸ ¸ ʷ ʷ lzdtʔ ʊ d[d[) d[lzfnjs⊙dtatsə d[lsj ʊ⊙fnjststsdz tatʊ¸ j ¸ j dz¸ tatʊ⊙ʊ d[d[- 60 ¸ ı ʊ, tʃ tsfnjdz¸ ʊ¸ j ⊙tatsʰ ¸ j dz⊙dz[lsj dz¸ ʰ ʳ ʳ dz⊙ OK.

2, ʅ ¸ jtad[L ⊙tʃ lzfnjs d[lsj ʔ tsdz¸ ʳ ʳ lsj tatʊ d[tʃ tsə lststatʊ d[lsj ʰ ⊙tsd[2 d[3, ʊ[tstsBʳ lzB ¸ j H d[lsʳ fnjʷ ə lststdz¸ ʊ[tsʅ ʔ ʔ lzfnjs⊙dtatsə dz¸ dzə tatʊ¸ j ı d[dz¸ 1280x1024@60 ¸ ı ʊ .

3, ∫ ls⊙dz ʊ d[lsj ʔ tsdz¸ ʳ ʳ lsj tatʊ, tslsfnjs¸ j H d[dz[lsj d[fnʃ tsdz L tsə ⊙ə ʰ d[ʔ fnjʷ tatʊ⊙dz¸ ¸ j dz¸ tsdz[lststatʊ d[ə dtatsə ʳ tʃ tsH fnjs¸ j H d[dz[lsj dz¸ tsdz[lststatʊ Philips fnjʳ ʔ ʃ .

4, J ʔ dz ʊ d[lsj dz¸ tsdz[lststatʊ, ⊙L ⊙ls¸ j dz¸ - ʅ ʔ .

J : J tstʃ tatsfnj Y lstts tsL dz⊙ʊ⊙¸ j ls tʃ tsʷ ə dz¸ j dz[¸ j dz⊙ı ʔ tatʊ⊙dz¸ fnjdz¸ H lzˣ ʰ ¸ j dtatsfnjstsBʰ ¸ j dz[ʷ: *THIS IS 85HZ OVERSCAN, CHANGE COMPUTER DISPLAY INPUT TO 1280 x 1024 @60HZ*?

∫ : ʔ lstts tsL dz⊙ʊ⊙¸ j ls, ʊ[tsʊ⊙fnjststsl⊙fnj[d[dz⊙dz⊙, tʃ tsfnjstzʃ⊙ˣ ʰ ¸ j dtatsfnjə⊙ʰ ¸ j dtatsʃ¸ j tatʊfnjsd[dz⊙dz dtatsdtatsʔ tsdz¸ʃ ʳ ʳ lsj tatʊ⊙, tatʊ⊙ə dz¸ j ¸ j lsfnjʷ 85 ¸ ı ʊ d[dz⊙⊓ tsH d[lsfnjʷ ə dz¸ H d[⊙ʃ⊙L tsdz⊙tatʊ⊙B tsʊ[⊓ʊ⊙fnjststsl dz¸ tsdz[lststatʊ⊙. r d[H ʔ tsʔ tatʊfnjs⊙dz dz[ʊ¸ j fnjʔ d[ʔ (r ʔ) dz¸ tsdz[lststatʊ dtatsə tsdtatsʃ tsʔ tsdz¸ dz[ʷ ə tatʊ¸ dz¸ j dz[dtatsl tslsʔ dz ʊ⊙¸ j ls tatʊ⊙L ə ¸ j tdatsʔ lz d[tʃ tsL ə tsdzʷ ¸ j ls ə⊙dz¸ ə ls¸ j ʊ¸ j dz[¸ j 10 dz¸ d[dz[lsl ə dz¸ j fnjsd[dz¸ tsB ⊓ tsH d[dz¸ j d[L dz¸ j dz¸ j dz[ʷ.

ʔ ⊙ʔ ʅ lstts ə ʳ tʃ tsdz[dz[lsʳ :

J ts ʔ H d[lsj ə dz¸ j dz⊙ Windows Start (ı lzfnʔ). J ʳ B ¸ jtad[lsj *Settings (ı ⊙fnjstats ʔ ʔ ⊙)*, L ⊙ls¸ j dz¸ *Control Panel (ı ⊙dz¸ j dz lzʃ tatʊ⊙ə dz¸ j dz[ʷ)*. J ʳ B ¸ jtad[lsj *Display (ʔ ʔ tatʊ⊙dz¸)*. ∫ ls⊙tats ʔ lsj ə ʔ dz⊙H ʔ lz *Settings (ı ⊙fnjstats ʔ ʔ ⊙)* d[ʰ ¸ j dz⊙dz[lsj dz⊙ʔ dtatsʃ ʔ ¸ j *Advanced (ʳ tstʃ tsdz[dz[lsj dz¸ j dz dtatsʃ)*. ∫ ls⊙tats ʔ lsj ə ʔ dz⊙H ʔ lz *Adaptor (ϕ H ⊙tʃ ls ¸ j tatʊ)*, d[L dz¸ j dz[lsj ʊ⊙fnjststsl dz tsB dtatsə dz¸ j dz[ʷ dz⊙ 56~75.

ʳ dzʷ ə ʳ tʃ tsdz[dz¸ j dz[ʷ ı ls ʔ ʔ tʃ tatsʊ¸ j H lzʳ lz ə ⊙fnj d[dz¸ j ¸ j ls fnjʷ ə tatʊ⊙fnjʃ tstatʊʷ ı ¸ j dz[ʷ d[10 dz¸ d[dz[lsl ʳ fnjdz[ə ʳ dz¸ lzfnjʃ ¸ j dz[ʷ ə ʳ tʃ tsdz[dz[lsʳ ı ls lz tʃ tatsʊ¸ j H lzʳ dz L ⊙10 dz¸ d[dz[lsl, lstts H dzʷ ə dz¸ fnj ¸ j dz[ʷ d[L dz¸ j dz¸ j dz[ʔ ə ʳ ʔ dz ʊ d[lsj dz¸ tsdz[lststatʊ, ⊙L ⊙ls¸ j dz¸ fnjdtatsə ⊙ ¸ j dtatsə ʔ dz ʊ d[lsj .

J : Y lstts tsL dz⊙ʊ⊙¸ j ls "ʊ⊙fnjststsl⊙ tatʊ¸ j ¸ j dz¸ tatʊ⊙ʊ d[d[" ə dz¸ tsdz[lststatʊ¸ j fnjʔ ʃ ?

ʃ: ˥ dz˝ dʒsdz⁄lsststasə fnjr ʂ˥ ɿ˥ʃstslsʊ tɑ¿ɑ¿ɑ dz¿tɑʊɿɑ˥ tsfrʃsɜts? tɑtsdz˥ dz⁄ ɑ˥ɑtɑʊ¿ls.
ʃ tsdz⁄lsstɑ˝ fnjr ʂ˥ ɿ˥ʃtsɿɜtsdz˝ʁ lsɿʃtsdzɿɿɑ˥lsˇ frjsʊɜɑ˥dz˝ dz⁄ɑ˥ʃ¿ dz⁄ɑ˥ʃ¿ɿtɑɿɿʊ˥ʊ˥ʁ ʰ ¿ʃ ɑ˥ɿtsɜtɑʊ¿ʃ¿ dz⁄ɑ˥ʃ¿
dz⁄ɑ˥ɿʊ˥frjstslsʃ¿ 60 ¿ɿ.ɿ ¿ʃ frjʰ ¿ʃ frjsɜɿz¿ls ɜɑ˥ʰ˥ɑ˥dz˝ ˥˝ tɑʊ˥ dz˝ɑ˥ɿʊ˥ʊ˥? dz˝¿ʃ¿ʰ ɿ˥ʃ˥ʃ˥ʃ

Ľ : R ďźˇˇľsďźłľďźÓˇˇďźˇˇ ťÓłłśťťľÓťťˇˇÓťťďźťťÓťďłłнďźŷ r ŞłŁ ?

Ľ : Ľ ťťľsďźłťďłłťťľsнďłłŁďźˇˇďźнВÓˇˇ Ç Ł ť, ə Çťľśťťť Ł нďźŷ ŷ ťťťďźłťťťťə Óďźłŷ ťťťďźłťťťťďźłłŁďźłłłŷ ťťÓˇˇťťťďźłłłłŷ ťťÓˇˇťťťďźłłłłŷ ťťÓˇˇťťťďźł

tc¸j dzdz[tdtsə⊙ls lsə⊙ʔc[j ⊓⊙tc⊙ʔlsj tcc[frjsc[ʔc[dʒtsdz[lststc⊙, ʔ⊙ʔ ʔtsdbstc⊙frjsdbsfrjs , ʷtc⊙ʔtsfrjs ,
tʃtsdbs⊳j dz[j tʃts dtstc[ʟtsdbs⊙dz[, tʃtsdbs⊳j dz[j tʃts ə j tdsc[ʔ⊙dz[, ʷ ⊙ʟz c[frj[dz⊙tdtsdz[ʟ⊙uc[ʳ ʰ dz ʷ
tstʃlsc[dʒ⊙dz dbs⊙ tc⊙ə tsls dʒtsdz[lststc⊙.

ʃ : ʔ⊙ʔ dz⊙frjstdtsc[ls dʒtsdz[lststc tstʃlsc[dʒ⊙dz dz dʒ tsə tc⊙ʟ tsdʒ tʃtdc[j dts lzfrjs⊙dbsə ʔ j ?

ʃ :

/, ʃ dz ʷ tsə j frj j ʟ j dz[ʷ tstʃlsc[dʒ⊙dz dbs⊙ ʟ lzfrj dz⊙ls⊙uc[c[dʒtsdz[lststc⊙ tsə ʷʟ⊙lsj dz dbs
lzfrjs⊙dbsə c[lsj tc⊙ʟ tcj ʰ j dz[j ʟ ʔtc⊙dz⊙ 1280x1024 lstsuj ʔ tʃtdc[uc⊙frjstslsj tsə dbsə dzj dz[ʷ
60 ʟ uʟ ʰ dz ʷ dʒtsdz[lststdtsə frj ʰ c[⊙dtsdz⊙dz ʳ ʟ ʔtc⊙dz⊙ 17-ʰ ʳ ʔ dʒtsə. ʟ tdc[dʒj uc⊙dz[j :
tʃtdtsə j tdc[ls lsj ʔlz ʰ c[j dz⊙frjstdts⊙ʔ ʔc[ʰ c[frj dzj ʷ dʒtsə⊳ dbs, dz⊙⊳ ⊙ə ʔdbstʃʔlz OK ʟ ʔtc⊙dz dbsdts
dʒj dz tsʰ c[dztc⊙. ʊ j ʔlz ʰ c[ʔ tcj ⊳ c[dʒ ʰ c[frj dzj ʷ tslstsə tc⊙⊳ ⊙j lsfrj ʷ ə tc⊙ʟ ʰ j dzj Product
Information (ʳ dz tstcdʒ⊙uc[ʷ tsə c[ʟ ʰ j dz[c[) ə ə ʟ ʔtc⊙dz dbsdʒ dʒj dz Main Contols
(j frjbsə dz j tʃ⊙tc⊙dʒj lstc).

0, ʃ dz ʷ c[dbsj⊙dzdz ʷ uc[c[tʃtdtsdtc⊙dʒdʒ tcj dzdz[tdtsə ʔc[tʃ dzsfrj ʔc[⊓ tʃ⊙dzj dzj ʔ (Ft adjust),
ʟ⊙tʃc[frj⊙dbsə ʔ dz⊙lzfrjs⊙dbsə tsuj dbsdʒ CD-ROM dʒtsdz[lststc⊙, ⊙ʔlsc[ə c[ʟ c[tdz ʔ lsj CD-ROM
c[ʰ ə⊙⊳ ʰ ʳ ʰ j dz⊙dz[lsj dʒ ʰ ʳ ʰ ʳ dz⊙tʃc[ʔlstsdtc⊙dʒdʒj Ft _setup04.exe. ʟ tdtsdtc⊙dʒdʒ⊙
FP Adjust lzfrjs⊙dbsə c[lsfrj ʷ ⊙ə lstsdʒ⊙lsc[uj frj ʔc[, ⊙ dz⊙tc⊙ə tsuj ʔ tʃ⊙dzj dz[ʟ ʔtc⊙dz⊙
tʃts ʷ ə c[lsfrj ʷ frjstslsə j lsfrjsə lz ʳ ʰ c[ʔ ʷ tcdz ʔ tʃtdtsdtc⊙dʒdʒ .

1, ʃ ⊙tʃlzfrjsc[lsj tʃtdtsdtc⊙dʒdʒlz FPadjust ʰ ə tsʔ dz dz ʰ j dz ʔtsdʒ dʒ ʰ c[dz⊙ʷ tcdz ʔ j
tʃtdtsdtc⊙dʒdʒ . ʃ ʳ tʃtsdzdz[lsj tʃts ʰ ⊙tsə ʳ j c[dbsjstdz ʔ uc[c[ʰ dz ʷ tstʃlsc[dʒ⊙ʟ⊙uc[c[
c[ʟ tsə tc⊙⊳ j dz[ʷ tʃtdc[tʃtsdʒ ʰ c[frj frjsj dʒ⊙dbsdts ə c[ʰ j ts ʔ tsdbstdtsdzdzj tc⊙

ʃ : ʔ⊙ʔ tsə tsc[ʟ dzuj dz[j r ʔ ʃ tʃts frjc⊙ə dzj dz[ʳ frj ʔ ʃ ʊ?

ʃ : ʃ tsfrj ʔtsdz ʔlz ə r ʔ ʰ c[frj dzj ʷ ⊓ dzj c[frj tsdz ʟ lzj lsfrj ʷ ʟ dzj ʔlstdtsdzdz ʔ tʃtdts⊳ j ʔlststc
c[ʟ dzuj dz[j frj tʃtsə j tc⊓ dbsfrjsc[ʟ ʔtc⊙dz frj z ʰ j frjsə j dzdbs dʒj dz ʰ j , uj dʒə ʔ ʃ ʊ.

ʃ ʃ ʃ

y ˙ ls˚ ˙˚˛˙˝˚˚ ˛ ˝ ˛ ˚ ˙ ˚ ˙ ˚ ˙

HQfrnJfdzj¸j¸ə tJtstdsOlsQə dz¸ ˝ ¢tsdzJ˙ ʁ lsj¸tdtsə (lsQtJfO"dzlzlsʁlz¢") Qf HtdzdQf˝ dzOdtsəOʁOtaQlsdz¸ ˝
¢tsdzJ˙ ʁ lsj¸tdtsə. ¢O¢ Qf lzfrnJstdts? frnJsə O, QfLdtslstsə dzj dzdz¸ j¸ tJtslsj˝dtsdtsdQf Qf dz©ʁOL¸j
frp¸jlstsQfLdzuO˙ʁ h Qf˝ HQftsHtsə Qf tJfdz©LdzJ dzdz¸ ˝ HQfrnJfdzj¸j¸ə, r ¢Γ tJtsLətsdz˝¸jlstJtsdzuOls
ʁtsdzj¸j¸ uj¸ls¢Qf¸j QfLtsʁtaO˙j¸dzdz˝, uj¸dzHQfrnJfdzj Qf dz©ʁOL¸j ˹ dzj¢lstdtsdzdzts-dzuj¸ətts? lstdzʁ¢Qf
(¢∫ υ). r ¢Γ tJtslstaj¸ʁdz˝¸jlsdtstaOLHts dzJ dz¸h j¸ ˹ dzj taQf Qf, uj¸dzJtJfdz©LdzJ dzdz¸ j¸ HQfrnJfdzj Qf,
tJtsfn¢tsdz¢lz tJtaQfdzuQfJtJ taO˙ʁtslsˆ r ¢Γ tsfnJdtsə O˙dzdz©ʁdtsˆQf dtsə¢Qf¸j Qfrn¸JfzfnJ¢O¸jdzJsdts frp¸jlsO, O
dzj dz©O¢lsQə Qf LO˙uQfQf QfLdtzuj¸dzdz˝.

J : ¢O¢tsə O˙lsj˝dtsdtsdtsQf˝ QfLdtslstsə dzj dzdz˝ r ¢Γ ?

∫ : r ¢Γ ˝ tstadzJfdz˙ʁ lsfnJQfrnJJftsdz LtsəO˙dzdz˝¸jdzJHəlz˝ frJsj¢dz˝dzdz˝ ˝ tJfdz©frJsQfdz¸taO˙LdzJ¸h j¸dzdz˝ ˝
dz©taOfrnJstsˆdzdz˝Qf dzj fn¢tsdz¢Qf˝ dzJQf¢tsdtsdtsə (dzJ¢dzJ) HtdzdzJtslsHtdzdzO˙ ˹ tdtsfnJstaOdtdtJsə ts dzj¸ˆ HlZ
tJfdz©frJsQfdz©dzJ LOJftsdzdz˝ʁ lsˆ Qf HQfdzJ¢taQfrnJsOdzdtsdzJ O˙LOlsj¸dzJtJfdz©frJsQfdz¸ LOJfOQfəO˙ʁ lsə
ədzj frJsj¸, tsʁ¸jfnJJ¸j¸ uQfəO˙˝ Qj¸taQfzj¸lsQfu¢tsfrJs˙ . J¸j¸ taO˙dz˝ʁ tJfdz©frJsQfdz¸ts¢taO˙h Qfə˙ʁ lsə
tsfnJdtsə dz¸j¸ uə¸jlsO(¢taOfndz¸?, L¸jdzj dz¸? Qf fnJQfdz¸?) HdzˆW˝ tstadzJfdtsə Odz¸Qf˝ uə¸jlstsə tsdts
˝ Qf dz˙lstaO. ˛ O˙lsj¸dzJ¢ tsʁ¸jQfdzJtJfdz©frJsQfdz©dzJtJfdzQf¢dzj Qfə˙ʁ lsJtJtsdz˝taQfL˙Olstsˆ . υO¢lz˙ʁ
frJstdz¢lsztdz Qf dtsdtsH˙O dz©L˙ ə˙ʁ ls"˹ dzj dzJ¸dtsdzJ". ˛ O˙tsfnJdtsə¸j¸ lsO¢tsdts
˝ Qf H¢ts¢taQfrnJsOdzdzQfu¸jfn¢tsdts˹ dzj dzJ¸dtsO¢tsdzJtJfsdz˙ʁ ls"dzJtsHlzdz ", HtsʁO˙ə dz˝W fnJfrnJsj¸dzJz
LO˙Hdz¸? tJftsHfrp¸jlsQf, ˹ dzj¢lstdtsdzdz˙ʁ uj¸tJ˙ ə˙tsLʁlz˝H¸jdz¸Q˝ Qf taO˙dzJ¢lz.

J : Ylstslsʁ¢tsj¸ tJftsdz˝taQfL˙OuQf˝ ?

∫ : ˛ tsdz˝taQfL˙OuQf˝ tsLdz©uO¸jlstJ¸jtaj¸H˙Ouz frp¸jlsO˙ə tsHdtsdzJdz©JftaOə dzj dzdz¸Q. ʁə¸jls
tJftaj¸HfrnJsO˙ə dz˝¸jlsfrJsʁtsQ˹ dzj¢lstdtsdzJ¢Odz¸dz¸lsdz˙ʁ ə˙tsdzdz˝. ¢ dzj¢lstaQfu¸jfn¢tsj Qf dzJ¢Odz¸dz¸lsdtsj¸ tJftsdz˝
tsfnJuQfdzdzQfdz˙ʁ lsə dz©JftaOə dzj dzdz¸Q, tJ¸jtaJ¸jdzdzQf¢lzdz˝tadtsdzJtaOfnJJftdtsfrJstaO˙dzj dzdz¸ʁ frp¸jlstsə tsdts
dzuO˙˛ O˙JftaO˙ə dzj dzdz¸j¸ ˹ lsQf˝ tJftsdzj¸? dz©L˙ ə˙ʁ ls"dz©JftaO˙ə dzj dzdz¸j¸ dzJtJftsdz˝taQfL˙OuQf".
∫ Br udz¸?, dzj tJftsdz˝taQfLtsə O˙dzdz¸? dzuQfdzJ¸jlstaOLdtsdz©JftaO˙ə dzj dzdz¸j¸ tJftsdz˝. ˛ tsdzj
tJftsdz˝taQfLtsə O˙dzdtsdts frp¸jlsO˙dz©JftaO˙ə dzj dtslstsdz¢tsə tsHdtsdzJdz©JftaO˙ə dzj dzdz¸Q.

J : Y¸jdzJtslsdzQfu¢O˙ʁ lsfnJ˝ r ¢Γ fnJtJfO˙fnJfnJQfə dtsˆ? dzJOlstaQfu¸j¸? tslsr ¢Γ fnJ¢O¢lsQfə dtsˆ? dzJOlstaQfu¸j¸?

∫ : r ¢Γ QfLdtslsO˙ə dzQfə O˙ʁ lsfnJtJfO˙fnJfnJQfə dtsˆ? Qfdz Qf¢lsQfə dtsˆ? dzJOlstaQfu¸j¸?. J¸j¢lsQfə dtsˆ?
dzJOlstaQfu¸j¸ dz©JftsLQfuQfQf¢O¸Htsdts tJfQf¢fnj¸dz˝ lzfrnJsOdtsə dzj dzdztaOdzQfrnJststaO, tJftslstaj¸ʁdz˝ʁ h Qf¸?
dzj¸dz˙h j¸ lstsˆ¢O˙Hdz˝ taj¸dzdzQftdtsə¢Qf˝ taˆ¢tsfrnJsQf ˹ dzj dzj¸dtsO˙QfLtsʁtaO˙¸jdzdz˝. ˛ tsˆ lstsˆ? tJftaQfuQfdzj
lstsˆ¢ə Hqfrnj¸dzj¸j¸ fn¢O¢lsQfə dtsˆ? dzJOlstaQfu¸j¸? dtsˆ¸jlstJ¸jtaj¸¢dz˝ uQlsˆ fn˝ fnJʁtsdz˙h j¸? uQfrnJstslstsˆ?, ə
taj¸LzdzlsOlsj¸ uj¸dtsLzdzuh˙ O¸jlsfn˝ ə taj¸dz˝ taj¸¢j¸dzj taOuQfQf QfLtsʁtaO˙¸jdzdz˝ dz©˹ ¢taOdzj (ə
uQfrnJsdtsfrnJsQf, ¢lztafrnJstadzJ˙ h Qf ʁtsdzj¸j¸ tJfdz©ə dtsˆ tJ¸jtaj¸dzJ¸h O¸jlsfn˝ tJfts˹ ¢taOdzz). r ¢Γ fnJ
tJfO˙fnJfnJQfə dtsˆ? dzJOlstaQfu¸j¸? frJsH¸jtaˆ¸Qlsfn¸jlsQlz tJftdtsə tsHdzdz¢tsə fnJtJfQf¢fn¸jdz˝dzJQf, taO˙dzj¸h j¸dzdz˝ dzJQf
ə ¢O˙Htsdz˙lzLdzj fn¸jlsQf.

J : ¢O¢tsə tJftaQfdzuQfJtJ taO˙ʁtslsˆ r ¢Γ tJfO˙dzj¸dzQf fnJlstsdz©tsJfdzj¸dtsuQdz˝ dzJQf lstaO˙dzQfrnJststaO˙dzJQf?

∫ : J ¢O˙Htsdz˙frnJstsdzʁuj¸ Qf ¢O˙Hts? frJstdts¢¸j¸ r ¢Γ tJfO˙dzj¸dzQf fnJlstsdz©tsJfdzj¸dtsuQdz˝ dzJQf
lstaO˙dzQfrnJststaO˙dzJQf Qfdzj¸ʁ lsfn˝ frJstslsə¸jlsfrJsə¸j¸dzdztsˆ dzj¸dzj¸dtsə tsLʁlz˝H¸jdz¸Q˝ Qfrnj¸stsuQdz¢Qf˝
HO˙dzdz˝ ˝ Qf frJstdtsʁQfdz˙ʁ h Qf¸? ˹ dzj dzj¸dtsə tsLʁlz˝H¸jdz¸Q˝. ʁlstsˆ¢ lstsdz©tsJfdzj¸dtsuQdztsdts
lstaO˙dzQfrnJststaO˙¢O¢¸j¸ Htsdts ˹ dzj dzj¸dtsO˙tJftsHfrJsj¸HQfdzj¸dz©˹ dzj¢lstdtsHlz. ∫ tsdzj¢lzdz˝taQfdz©˝
frJstdz¢lsztaO˙˝ Qf H¢ts¢taQfrnJsOdzdzQfu¸jfn¢Qf˝ ˹ dzj dzj¸dtsə L˙OQfrnJ¢lstslslstsdts, tJftsHOdtsdz©
˹ dzj dzj¸dtsˆ dz©JftaˆW˝ j¸dzdz¸j QfdzQf dzj¸lsˆ ˛ taQf tJftdtsˆ˝tsˆ¸Hj¸dzdz¸Qf tJftsdz˝taQfL˙OtsəO˙dzdztsdts frp¸jlsO˙uj¸taj¸L
taO˙dzQfu¸dz¸j¸ frJstdz¢lsztaˆ ˹ dzj dzj¸dtsə QfLdzJ¸dz˝¸jlsfn˝ j¸dts dz©JftaO˙ə dzj dzdz¸j¸ Qf ¢tsdzQfu¸jfrJsə ts.
[frpdzQf HəO˙tJftsdz˝taQfLtsə O˙dzdz¸? ˝ ˝ Qfdz lstaO˙lzfrnJsO˙dtsə dzj dz¸ ə¸jtdsQf¢Odz dtsə ə lstsu¢¸j
Qfrnj¸JfzfnJ¢O˙dzdz˝ tJftsdz˝taQfL˙OtsəO˙dzdztsdts frp¸jlsO, frp¸jlsˆ tJftdtsˆ˝tsˆHwh Qf¸? uj¸taj¸L ə¸jtaˆ˝dz©˙ʁ
tJftsdz˝taQfL˙OtsəO˙dzdz˝ʁ tJfO˙dzj dz˙, tJftsə ˙tstaO˙uQfə O˙¸jlsfn˝ dz©9 0Á˙tslsdtsfrp¸jlsj¸dz˙dtsˆ frnJfQftaO˙dz˙dtsˆ?

frjstdzÇlsztœ dzjsdzj Çlzdzx|dfH Çtsdts Çtœ[frjsÖdzbÖ d[tfdts¬tsH d[ls ujtœjL dz[x|dz[?
tfjtsdz™tœ[Ltsœ Ödzbz ? ™ d[dz lstœ.] tœ[tfjtsH Öujj dz®tfœ™x|jdz[™ dzjsdzj Çlzdz x|dH Çtsdts Çtœ[frjsÖdzbÖ
tœÖL dzjh Öx lsfny œjtdsd[Ç Ödz dzs tslsdzsfnp[lsj dz dzs d[fr¬tsH dzs? frjstdzÇlsztœ , Ö
dz®tfœÖœ dzjdz[j frpjls Ödzj d[Ldzj dz™jlsfny dz®90Á J |lstsdzfnpbzu Öj frpjls tfjtds¬tsH wh d[?
ujtœjL œjtœ¬dz® tfjtsdz™tœ[Ltsœ Ödzbz® tfÖdzj dz, dzjs|jls dzj tfjtds¬tsH d[ls ujtœjL dz[x|dz®
tfjtsdz™tœ[Ltsœ Ödzbz® tfÖdzj dz.

J : ÇÖÇtsœr tfjtœjd[dzZh jfrjsœÖr Çr frjlstsdz®tsfjdzj dzsupdz dzp[lstœÖdzd[frjststœÖdzp[tfjts frjœÖœ dzj dz[x| Çfœ ?

J : J dzjsdz[lststœj dz®BÖj Çfœ |dzj Çlstdtsdz? tfjtdts|jÇlststœ cj dzj tœ[tdzjls|dzj Çlstdtsdz d[
tsfrpdzsœ dzs? frpjlstsœts? dzzu œ tœjLzdz lsÖlsj Bts dzsÖœH d[tdtsœ Çd[dz dzp[dzj frjuj dzsdzs? lstdzB Çd[
tfjtsdz™tœ[Ltsœ Ödzbz dzp[|dzj Çlstdtsdz®dzp[.] ts lstsdzz dzjsdz[lststœ dz®BÖj Çfœ tœÖBtslsÖx lsœ
tsfrpdzsœ dzsdzp frjÖdz®dzsdzp Çtœ Ö frpdzsdts, Lj dzj dzsdts d[frp[dzj dts uœj lstsœ (R, G, B).
J tsdz[lststœ frjr Çr frjlstsdz®tsfjdzj dzsupdz dzp[lstœÖdzd[frjststœÖdzp[- |lstslzfrjstdts? frjsœts,
tslstsœ tœÖ|Öx h jj œ¬tsH dzsj d[Ltsœ tœÖ|jdz[j frjfjtsdzjsh J x d[HÇtsÇtœ[frjsÖdzbz[ujfrjÇts?
tfÖdzj dz[. ÿtsdz®tsfjdzj dzsupdz ? lstœÖdzd[frjststœ d[dzjj lsfrjstdzÇlsztdz, tslsdz[ujdz tslsfrjstdzÇlsztœ
Çfœ ÿ: ÇÖ|Hr ? |dzj dzj dzs d[dzjj lsfrjstdzÇlsztdz ÖÇlsœ[œ dzs? dzÖlstœ[uf d[dzj Lœ d[frp[dzp j
ÖÇlsœ[œ dz j |dzj dzj dzs . r Çr frjlstsdz®tsfjdzj dzsupdz dzp[lstœÖdzd[frjststœÖdzp[frjsH jtœ|d[lsHœj
frjsj Çdz™dzdz j tfÖdzj dz[, tfjtdtsfrjstœÖdzsœ ts dzj x|Hz Çtslststœ dzp[LÖfjtsdzdzj dzs x|dHÇd[dz
Çtœ[frjsÖdzbzsdzp [frpdz[Çx|Hr ? |dzj dzj dzs tfjtsHfrjsj Hd[dzj dz Ç |dzj Çlstdtsh Ödzp d[dz® dzj dts tfjtsH Ödzs
dz®tfœ™x|jdz[j, dzjsdzj Çlzdz™tœdz® frjstdzÇlsztœÖx|dHÇtsdts Çtœ[frjsÖdzbzÖ d[Ldzj dz™jlsfny, œ
tœjLzdz lsÖlsj ujdts tœjdzdz[tdzjlsfny Çtsdz[ujfrjsœts tfjtsfrjszfÖx h jdts frpjlsÖHdz™
™ tstœdzp[tdtsœÖdz®™ d[Ltsœ tœÖ|jdz®? r Çr frjlstsdz®tsfjdzj dzsupdz dzp[lstœÖdzd[frjststœÖdzp[d[dzjj ls
tœ™H tfjtœjd[dzZh jfrjsœ tfjts frpjœÖœ dzj dz®Hdz™ frpÇfœ ÿ, tfjtsfrjÇtsdz Çlzr Çr dzjs|dzs d[Ldtslstsœ d[ls Bts dzjj
tfjdzsfrjÇd[dz Ö d[Ldtsœ tœÖ|jdz®j dz® dz® dzj dz dzj tœujÖj ls œ frp[dzz lstsdts, ujsts d[Ltsœ tœÖ|jdz®j
™ tstœdzp[tdtsœ dz® dzj lstsH tsdz tœÖL œjtdts Çd[.

J :] tsujdzz ujfrjstslsÖ Çfœ Hœ tdtsœ 60 |ujtsfjlsp[dzÖdz dz® Hdz™ dzjsdz[lststœÖ frjr Çr ?

J : J tslsdzp[ujj tslsdzjsdz[lststœÖ dz® BÖj Çfœ ÿr Çr tfÖdzj dz frjlstsdz®tsfjdzj dzsupdz dzp[
lstœÖdzd[frjststœÖdzp[d[dzjj ls™ d[Çfrp[tdtsœÖdzbzz® tœÖL tœjh Öx h lz® frjfjtsfrjsœ dzsfrjs .] Ötfœ[dzjj tœ,
dzjsdz[lststœ XGA d[dzjj lstœÖL tœjh Öx h lz® frjfjtsfrjsœ dzsfrjs 1024x3 (R, G, B) x 768
tfd[Çfrpj dzj ?, ÖBtsdzjj œr frjsÇlz® tœÖL tœjh Öx h lz® frjfjtsfrjsœ dzsfrjs dzjœtsL dzjs|dzs
tœj Ödzp[Ltsœ Ÿs BjL Htsfjtsdzz[lsj dz dzs? tfjtdtsœtœÖdzjdzjdzs? tsœtœÖœtsls Çd[.] Ödzj dz tœÖfrjpu[lsÖdz®
dz® tsfjlsp[dzjL Ö u[d® d[Ltsœ tœÖ|jdz[™ Hdz™ frp[dZtdtsdz[LÖu[d[lstsujÇ dz® u[frjstslsj 65 J |uj-
frjsÖdzÖtdsdzs? Hdz™ Hd[frjfdzjjœ XGA.] tsfrÇtsdz Çlz u[frjstslsÇ Çfœ Hœ tdtsœ d[frjstdtsÇ Hdz™ lsÇtts?
u[frjstslsÇ frp[dZtdtsdz[LÖu[d[lstsujÇ frjsfrjsÖœ dz™s lsfrjstslsœ jlsfrjsœ jdzdzs 60 |uj d[48 K|uj,
tfjlsp[dzÖdz dzs? u[frjstslsts? Hdz™ lsÇtsdts dzjsdz[lststœÖ™œdz™jlsfny 60 |uj.

J : ÇÖÇtsœ Ölsj¬dzsdzsdz[™ Htsfrjsp[x|jdz[™ h d[tdtsÇtsdts lzdz®tsœ Ltstœ? ÇÖÇ tsdz® tœjÖdz[Lzjlsfny?

J : r Çr tfÖdzj dz frjlstsdz®tsfjdzj dzsupdz dzp[lstœÖdzd[frjststœÖdzp[frjsfrjstsœ d[L |dzj dzj dzstsœ,
tœjdzdz[tdz h d[¬ d[tslstsœ tœÖ|Öx h d[¬ frpjls d[frjfjzfrÇjdz ? frp[frjsjdts? LÖHdzj ? tfjtsHfrpjlsÇd[,
œ frp[dz lsÇtsdts frpts? frjsœ Öx d[HÇtsdts Çtœ[frjsÖdzbzÖ ÇÖÇ Hœts? dzsj tfjtœjdzsdzjdzj dz[j dzzu Ö
J dz®dtsH Ötœ™ lstsdzz u[stsfjtdtsj u[d[tdzjdz ? œ¬tsH dzs? tfjtzu Çfrp jls Ötfjtœjdzsdzjdz™jlsfny œ
dz®tfœÖœ dzj dz[d[tsfrpdzsœ dzs? tsfrp[x|d[HÇtsÇtœ[frjsÖdzbz[ujfrjÇtsdts |dzj dzj dzs Ö, dz®tfœÖœ dzj dz[j
frpjls Ötfœ[™ tstœdzp[tdtsœ Ödz®d[Ltsœ tœÖ|jdz[™ tœjdzdz[tdzjlsfny.] tsfrÇtsdz Çlz Çts™™ d[u[dzs
tfjtœjdzsdzjdz[™ tfjzu Çfrp jls Ö, tfjtsfrjszfÖx h jdts œ x|dHÇd[? Çtœ[frjsÖdzbz d[Ldzj dz™jlsfny œ
LÖœ d[frp[dzjsfrjs[tslslzdz® tfÖHjdz[™ frpjls Ö, lzdtsdztsœ Ltstœ Ölstsdz®tsfjdzj dzsupdzdts lstœÖdzd[frjststœÖ
tfjtsdzu Öjlsfny dz® dzjdzsdts lzx|j, ujdzjœ Çfœ ÿ. J Br u dzs lzdtsdztsœ Ltstœ tsfjtœjHjdz™jlsfny œ lstsu Çj
frÇtsdzstœ frjsdz dzjHd[fÖ Ötsdzsdzj 10. J dz® frjstsh jj œtœjdz™ tœÖL tœÖBÖls œ x lsfny dz® frÇtsdz Çts
dzjlstsHtsœ tœ frh d[tœjdz™ lzdz® tsœ Ltstœ] Ö[Btsdzjj tsœh d[dzjdzjlstsHtsdz™œdz™jlsfny
tfjtœ[dzjdzjdz[j tfjdzj dz® d[frh d[tdtsÇd[dzjlzdzdzsdzj tsœ Ltstœ tœ frh d[tœjdz™ dzjL Ö frpujj ls d[Ldzj dzjdz[™
tfjts¬Ö Ölsj dz™ tfjtœjdzsdzjdz[™. Çtdtsdzj lstsdts, Hdz™ tœ frh d[tœjdz™ lzdz® tsœ Ltstœ tfjtœ[dzjdz®™ ls

lsÖÇ¢d¸j dz¸jlstsıʳ , ÇÖÇ IPS (ɔdzlstɔ¢d¸ʃdzsfr¸Çtsfrjsdzs¸j tʃ¸jtɔ¸jÇdz˝ ɔ¸jdz¢d¸j) d¸ MVA (dz¸dzsdtsÇtɔÖlsdzs¸j ɔʳ tɔÖɔdz¢ɔÖdz¢d¸j tʃtsɔ¸jtdlsd¸ÇÖdz¢d¸).

J : ɿ tsɔ¸jdz¸d¸ıtsɔtɔÖı¸jdz¢d¸j dz¢ɿ ÇtɔÖdz¸ dz¸tsdz¢lststɔÖfnjr ɔ¸r dz¸ dz¸jtɔ¸jÖ¸jls?

ʃ : ʉlstdtsdts dtsɔtstɔ˝, d¸ıtsɔtɔÖı¸jdz¢d¸j dz¢ɿr ɔ¸r dz¸jtɔ¸jÖ¸jls, dzs tʃtɔ¢ʃ¸d¸dz¢ɿ lstsdts˝ɔdz¸dz¢d¸˝ tslsdz¢ʃ¸dz¢ tslsʃtɔ¢ʃ¸d¸dz¢, tʃts Çtslststdts? dz¸jtɔ¸jÖ¸jls d¸ıtsɔtɔÖı¸jdz¢d¸j dz¢ɿ Çtɔ¢Ödz¸ Ç∫ ʊ, tʃtɔ¢ʃ¸j dz¸ ɿ lstsdz¸jtɔ¸jÖdz¢d¸j dz¸ dz¸jʰ Öjls dz¢ɔdz˝ ıj dz¢d¸ʳ ı¸Ö d¸ıtsɔtɔÖı¸jdz¢d¸j dz¸ ∫ ¸jtɔ¸jÖdz¢d¸j d¸ıtsɔtɔÖı¸jdz¢d¸˝ dz¢ɿr ɔ¸r tsɔʳ ¸jdzs fnp˝ı¸Ödzs fnjdz¸jtsʃtɔ¸jıj dz¸jdzs? ˝tɔÇtsfrjsʳ , ¸jtsts˝ɔdz˝¸jlsfnj˝ fnjdz¸jıfrjsɔd¸j dz¸tɔ¸Ldzsfrjsd¸ dz¸jɔ¸jıtz tʃtsdzs¸jd¸lsj¸dz˝ dz˝ dz¸d¢ʃtɔ˝¸j dz¢d¸j dz¸ ʉ ıtdzdts? frjststdtsdz˝ , dz¸jtɔ¸jÖdz¢d¸j d¸ıtsɔtɔÖı¸jdz¢d¸˝ dz¢ɿ ∫ ʊ, tɔÖ¸ıtɔÖı¸jÖʸʰ ¸j¸j tstɔÖdz˝ ¸ıtɔ¸jdz¢d¸˝, ɔtsıdz¢Ö¸jls, Çtsıʰ Öʃ¸jtɔ¸jÇdz˝ ¸jdz¢d¸˝ dz˝ dz¸d¸dz¢frj¸jdzsdzsdts ɿ dz¸jdz¸jdzsÖfrjsÖdzsɔ˝lsfnj˝ ɔd¸ıdz¸dz¸d¸. ɿ tsfnjÇtsdz˝Çz frjÇtstdtsfrjs˝ tɔ¸jÖÇ¢ʃ¸d¸dz¢ ¸d¸ıÇtsdts Çtɔ¢frjsÖdzdzÖɔ r ɔ¸r ʃ¸Ödz¸dz¢d¸ dz¢dz¸dzsdts dz¸jdz¸ʰ ¸j¸, ¸jdz¸ɔ Ç∫ ʊ, tɔÖ¸ıtɔÖı¸jÖʸʰ ¸j¸j dz¸jtɔ¸jÖdz¢d¸j d¸ıtsɔtɔÖı¸jdz¢d¸˝ dz¢ɿ Çtɔ¢Ödz¸ r ɔ¸r tʃtɔÖÇ¢lsɔ¢ʃ¸jdz¢frjÇ¢d¸ dz¸ dz¢ɔdz˝ ıÖ¸jlsfnj˝.

J : ɿ tsɔ¸jdz¸dz¸tsdz¢lststɔfnjr ɔ¸r dz¸ frjs¸ıÖ¸jlsɔdz¸ʰ dz¢d¸˝ ɿ dz¸jÇlstdtsdz¸Ödz¢d¸lsdz˝ ˝ tʃtsdz¸j˝?

ʃ : ʃ tslsdz¢ʃ¸d¸j tslsÇ∫ ʊ dz¸tsdz¢lststɔfnjr ɔ¸r dz¸ frjs¸ıj¸tɔ¸ıd¸lsÇtsdz¸ʃtsdz¸dz¸tsɔ, ɔ¸j dz¸jtɔ¢ʃtdz˝ʰ d¸˝ ɿ dz¸jÇlstdtsdz¸Ödz¢d¸lsdz˝ ¸j tʃtsdz¸j˝d¸, tsfnjs¸j dz¢dz¸tsdz¸Ödz¢d¸lsdz˝ ¸j tʃtsdz˝. ɔtdtsdz¸j lstsdts, tʃtsfr¸Çtsdz˝Çz r ɔ¸r tʃtslstɔ¸jıdz˝¸jlstslsdz¸tsfnjd¸lsj¸dz˝ dz¸tsdz¸Ödz¸ɿ dz¸jtɔ¢ʃd¸d¸, ¸jdts ıdz¸tsÇ tʃd¸lsÖdz¢d¸˝ dz¸ frjs¸ıÖ¸jls tʃtsdz¸j˝.

ʒ y ʁ ʃ d ʃ l ʃ] ʃ n ʁ n ʃ d ʏ d ʃ l ʃ ʒ d ʃ l ʃ ʃ ʃ

ʉlsÖdz¢ÖdzÖ¸ɿ ɿ tɔ¸jtsdz¢dz¸d¸Ç¢d¸, ɿ Çtsdz¸tsɔd¸d¸ d¸ ıj¸ıtsʃÖfnjdz¸tsfrjsɔd¸

J : ʏlstslsÖÇ¢tsj¸ ıdz¢ÖÇ CE?

ʃ : ʃ ÖtɔÇ¢d¸tdtsɔÇ¢lz CE (Conformit® Europ®enne) lstɔ¸jıbz¸jlsfnj˝ tʃtɔ¸tsfrjsÖɔdz˝lsʳ dz¢ÖÖlsj¸frjstsɔÖdz¢dz¸˝ tʃtɔ¸tsʰlz¢Çʃ¸d¸d¸, tʃtɔ¸jʰdz¢ÖÇ¢d¸j¸dz¢dz¸˝ ʰdz˝ tʃtɔ¸tsʰÖ¸ıd¸ dz¢ÖÇ¢tɔʳ dz¢¸j ɔ ¸ɔtdtsʃ¸j. ɿ dz¢ÖÇ¢ "CE" tsıdz¢Ö¸jls, ¸jtsts d¸ıʰ¸j dz¢d¸j frjstslsɔ¸jlsfrjsɔlz¸jlslstɔ¸jıbtsɔÖdz¢d¸˝dz¸ ¸ɔtdtsʃ¸j?frj¢ts? ¸ d¸tɔ¸jÇlsd¸ɔʳ . ¸ ɔtdtsʃ¸j?frj¢Ö˝ ¸ d¸tɔ¸jÇlsd¸ɔÖ- ɿ lstsʃ¸jɔtdtsʃ¸j?frj¢d¸? "ıÖÇ¢tsdz˝, tʃtɔ¸jʰ¸j dz˝ʳ ʰ d¸? tsfnjdzsɔdz¢ʃ¸j tʃtsdzs¸j¸jıdz¢d¸˝ ɔ tsɔdz¢Ödz¢frjsd¸ ts˝tɔÖdz¢ ıʰtstdtsɔʲ˝, lsj¸˝dz¢Çd¸ ıj¸ıtsʃÖfnjdzsfrjsd¸, ts˝tɔÖdz¢ tʃtɔ¸tdtsʰʳ d¸ıÖʰ d¸lsʳ tʃtɔÖɔ tʃtslstɔ¸jıbd¸lsj¸dz¸j?. Çlsɔ¸ d¸tɔ¸jÇlsd¸ɔÖ-ÖdzÖdzsɔd¸d¢ʃ¸d¸ ϕdz¸jtɔ¸jÇÖdz¢ʃ¸tsdz¸dz¢ʃ¸d¸tsdz¢dz¸dzsdz¸Çtsʰ¸jÇfnjz tʃtsɿ dz¸jÇlstdtslsj¸˝dz¢Çʃ¸j d¸ frjsÖdz¢ÖdzsÖdz¸UL.

J : ʃ lsɔ¸jʃ¸Ö¸jlsdz¸d¸ dz¸tsdz¢lststɔfnjr ɔ¸r tsɔʰ d¸dz¸frjsÖdz¢ÖdzsÖdz¸ıj¸ıtsʃÖfnjdz¢frjsd¸?

ʃ : ¸ÖʃtsdzÇlststɔ˝ fnjr ɔ¸r Philips frjstslsɔ¸jlsfrjsɔlz˝ lslzÇÖ¸ÖdzÇ˝dz¸MPR-II d¸ frjsÖdz¢ÖdzsÖdz¸ TCO 99/03 tʃts tɔ¸jdzdz¸d¸tdtsɔÖdz¢Ç˝ d¸ıdz¸Çlstdtsdz¸Ödz¢d¸lsdz˝ dz¸tʃtsdz˝dz¸ frjdz¢d¸ı¸jdz¢d¸˝ ɿ dz¸jtɔ¸tstʃtslstɔ¸jıbdz¸jdz¢d¸˝, ɿ dz¸jÇlstdtsıj¸ıtsʃÖfnjdz¢frjsd¸ ɔ tɔÖıtsʰ¸j¸? frj¢ɔ¸jʰ¸j d¸ tʃtɔ¸tdtsʰdz¢frjsd¸ Çtʃ¸jtɔ¸jtɔÖıtslsÇ¸j ʰdz˝ ɔlststɔ¸d¸ʃ¸dz¢dz¸ts d¸frjʃtsdz˝ ıtsɔ¸jÖdz¢d¸˝. ¸ ÖtslsʰÖ¸jdz˝ dz¢dz¸? frjstɔÖdz¢d¸ʃ¸j tʃtsʰ¸jtdtsıdz¢dz¸ tʃ¸jtɔ¸jtɔ¸jʃ¸d¸dz¢ frjsÖdz¢ÖdzsÖdz¸ ıj¸ıtsʃÖfnjdz¢frjsd¸.

ɿ tsʰ¸jtdtsıdz¢dz¸j¸j frjp¸jʰ¸jdz¢d¸˝ tʃtɔ¸tɔ¸jʰ¸jdz¢dz¸ ɔ ɢdz¢ÖɔÖ¸j ¸ tstɔ¸jÖ¸jls d¸ɔdz¢dz¸j¸j ʰ¸jtsʰÇ¸jzdz¸jdz¢dz¸ʳ .

dgjc8---Bz-BDS-psqqg_l-/5.t4-Q?DCRW-Q?D]D?O,FRK &7md 7'0..4+.0+02 /O8/6&1/ ?K

∫ ¸ j t c ʳ
B ¸ j L t s ∫ O f r ŋ d t ⁴ s f r] s o ∫ ,
t ∫ t s o ∫ f r ∑ c ∫
l z f r] s t c ⊙ d z ¸ d z ∫ ¸ j
d z ¸ c ∫ f r ŋ ∫ t c ⊙ ɔ d t ⁴ s f r] s ¸ j ?
Y ⊙ f r] s t s
ɔ t s L d z ∫ ∑ ⊙ ˣ ʰ c ∫ ¸
ɔ t s ∫ t c t s f r ŋ
∫ B ʰ c ∫ ¸
t ∫ t c t s B d z ¸ d ⁴
] t c t s B d z ¸ d ⁴ t ∫ t c ∫
ʷ t s t c d ⁴ ɔ ∫ t c t s ɔ ⊙ d z ∫ c ∫
c ∫ L t s B t c ⊙ ⁴ ¸ j d z ∫ ʷ
] t s t c d ⁴ ⊙ l s c ∫ ɔ d z ¸ j
H t s ∑ l z c d ⁴ ¸ j d t ⁴
[t d z c d ∫ ¸
d z ¸ t s B ⁼ t s H c ∫ d ⁴ ¸ j
f r ŋ ¸ j H ¸ j d z ∫ ʷ

] t s c ∫ f r ∑ c ∫ l z f r] s t c ⊙ d z ¸ d z ∫ ¸ j c d z ¸ c ∫ f r ŋ ∫ t c ⊙ ɔ d t ⁴ s f r] s ¸ j ?

] ⊙ ˢ l s t s ? f r] s t c ⊙ d z ∫ ¸ j t s ∫ c ∫ f r ŋ ⊙ d z c d z ¸ c ∫ f r ŋ ∫ t c ⊙ ɔ d t ⁴ s f r] s c ∫ , ∑ t s l s t s t c ʳ ? t ∫ t s c d z L t s ɔ ⊙ l s ¸ j c d z c d ⁴ s ⁼] s ¸ j l s l z f r] s t c ⊙ d z ∫ ¸ j l s
f r ŋ ⊙ d ⁴ s f r] s t s ʷ l s ¸ j c d z c d ⁴ s . [f r ŋ d z ∫ t ∫ t s f r ŋ d z ¸ ɔ ʳ t ∫ t s c d z ¸ d z ∫ ¸ j ʷ ɔ f r ŋ ¸ ⁼ l z ∑ ⊙ L ⊙ d z ¸ d z ⁼ H ¸ j ? f r] s ɔ c ∫ ? , c d z ¸ c ∫ f r ŋ ∫ t c ⊙ ɔ d t ⁴ s f r] s c d z ¸
l z f r] s t c ⊙ d z ¸ ¸ j l s f r ŋ ʷ , t s B t c ⊙ l s c ∫ l s ¸ j f r ŋ ∑ B d z ∫ ⁼ ⊙ ? ʰ ¸ j c d ⁴ z t s ʷ c ∫ ¸ c ∫ ⊙ d z c d ⁴ s c d ⁴ z H c ∫ c d z ¸ t c d z Philips.

∫ B ʰ c ∫ ¸ t ∫ t c t s B d z ¸ c d ⁴	
] ¸ j c ∫ f r ŋ ∫ t c ⊙ ɔ d t ⁴ s f r] s	] t c t s ɔ ¸ j t c ʳ l s ¸ j f r ŋ ¸ j d z ¸ H l z ˢ ʰ ¸ j ¸
] ¸ j l s c ∫ L t s B t c ⊙ ⁴ ¸ j d z ∫ ʷ (] ¸ j c t s t c ∫ l s f r ŋ ¸ j l s t s H c ∫ t s H c d z ? c ∫ c d z ¸ c ∫ ∑ ⊙ l s t s t c t s t c ∫ ʷ)	• U B ¸ j H c ∫ l s ¸ j f r ŋ ɔ l s t s c d ⁴] ¸ j t s f r ŋ ¸ j l s ¸ j ɔ t s ? ∑ ⊙ B ¸ j c d z f r ŋ t s H c d z ¸ c d z ¸ ∫ ⊙ t ∫ t s H f r] s ¸ j H c ∫ c d z ¸ c d z ∑ f r ŋ ¸ j l s ¸ j ɔ t s ? t c t s L ¸ j l s ∑ ¸ j , ⊙ f r ŋ H t c d z c t s c t s ∑ t s c d z ¸ ⊙ - ∑ c d z ¸ L H l z c d z ⊙ L ⊙ H c d z ? t ∫ ⊙ c d z ¸ c d z ∫ c d ⁴ s c d z ∫ l s t s t c ⊙. • H c d z ⊙ ∫ ⊙ c d z ⊙ ∑ c d z ¸ ∫ ∑ ⊙ ɔ ∑ c d z ʳ] ¸ j c d z ∫ ʷ t ∫ c ∫ l s ⊙ c d z ∫ ʷ , t c ⊙ L c d ⁴ ¸ j ʰ ¸ j c d z ¸ ⊙ ʷ c d z ⊙ t ∫ ¸ j t c ¸ j H c d z ? t ∫ ⊙ c d z ¸ c d z ∫ c d ⁴ s c d z ∫ l s t s t c ⊙, H t s c d z ¸ c d z ⊙ B ʳ l s ʳ ɔ t ∫ t s c d t ⁴ s ⁼ ¸ j c d z ∫ c ∫ OFF (J ⁴ ⁼ ∫), ⊙ t ∫ t s f r ŋ c d z ¸ c d z ⊙ ⁼ ⊙ l s c ∫ ʷ - ɔ t ∫ t s c d t ⁴ s ⁼ ¸ j c d z ∫ c ∫ ON (J ∫ ∫).
] ¸ j l s c ∫ L t s B t c ⊙ ⁴ ¸ j d z ∫ ʷ (] ¸ j c t s t c ∫ l s ʷ c d t ⁴ s ⊙ t c d z ? c ∫ c d z ∫ ⁼ ¸ j c d t ⁴ s ʳ ? f r ŋ ¸ j l s t s H c ∫ t s H c d z ? c ∫ c d z ¸ c ∫ ∑ ⊙ l s t s t c)	• U B ¸ j H c ∫ l s ¸ j f r ŋ ɔ l s t s c d ⁴] ¸ j t s ∑ t s c d ⁴ ∫ ʳ ˢ l s ¸ j t c ɔ ∑ c d z ¸] ¸ j c d z . • U B ¸ j H c ∫ l s ¸ j f r ŋ ɔ l s t s c d ⁴] ¸ j t s f r ŋ ∫ c d z ⊙ c d z ¸ c d z ? ∑ ⊙ B ¸ j c d z t ∫ t c ⊙ ɔ c ∫ c d z ¸ c d t ⁴ s t ∫ t s H f r] s ¸ j H c ∫ c d z ¸ c d z ∑ ∑ t s c d ⁴ ∫ ʳ ˢ l s ¸ j t c d z . •] t c t s ɔ ¸ j t c ʳ l s ¸ j ∑ ⊙ B ¸ j c d z c d ⁴ s c d z ∫ l s t s t c ⊙ c d z ⊙ t s l s f r ŋ z l s f r] s ɔ c ∫ ¸ j t ∫ ¸ j t c ¸ j c ∫ c ∫ B t s ɔ . • J t s L c d ⁴ s ⁼ ¸ j c d t ⁴ s , ⊙ ∑ l s c ∫ ɔ c ∫ L c ∫ t c t s ɔ ⊙ c d z ⊙ ʷ ʷ l z c d z ∑ ¸ ∫ c ∫ ʷ ˢ c d z ¸ t c d t s f r ŋ B ¸ j t c ¸ j ⁼ ¸ j c d z ∫ ʷ .
] ⊙ ˢ ∑ t c ⊙ c d z ¸ t s l s t s B t c ⊙ ⁼ ⊙ ¸ j l s f r ŋ ʷ f r] s t s B ʰ ¸ j c d z ∫ ¸ j 	• U B ¸ j H c ∫ l s ¸ j f r ŋ ɔ l s t s c d ⁴] ¸ j t s ∑ ⊙ B ¸ j c d z c d ⁴ s c d z ∫ l s t s t c ⊙ t ∫ t c ⊙ ɔ c ∫ c d z c d t ⁴ s t ∫ t s H f r] s ¸ j H c ∫ c d z ¸ c d z ∑ ∑ t s c d ⁴ ∫ ʳ ˢ l s ¸ j t c d z . (H c d ⁴ l s ⊙ ∑ ⁼ ¸ j ∑ t c ⊙ l s ∑ t s ¸ j t c d z ∑ t s ɔ t s H f r] s ɔ t s t ∫ t s c d z ⊙ f r] s t c t s ? ∑ ¸ j .) •] t c t s ɔ ¸ j t c ʳ l s ¸ j ∑ ⊙ B ¸ j c d z c d ⁴ s c d z ∫ l s t s t c ⊙ c d z ⊙ t s l s f r ŋ z l s f r] s ɔ c ∫ ¸ j t ∫ ¸ j t c ¸ j c ∫ c ∫ B t s ɔ . • U B ¸ j H c ∫ l s ¸ j f r ŋ ɔ l s t s c d ⁴] ¸ j t s ∑ t s c d ⁴ ∫ ʳ ˢ l s ¸ j t c ɔ ∑ c d z ¸] ¸ j c d z .

l ⊙ ⊥ ⊆ ⊙ ⊥ ⊆ ⊙ ⊥ ⊆

[illegible]	• [illegible] Auto. • [illegible] CLOCK ADJUSTMENT ([illegible]), [illegible] MAIN CONTROLS ([illegible]) [illegible] VIDEO NOISE ([illegible]).
[illegible] MAIN CONTROLS. [illegible]	• [illegible] Philips.
[illegible]	• [illegible]
[illegible]	• [illegible]
[illegible]	• [illegible]
[illegible]	• [illegible]
[illegible] Philips.	

Ezyr [illegible]

- TCO'99 Information
- TCO'99 Environmental Requirements
- TCO'03 Information
- Recycling Information for Customers
- Waste Electrical and Electronic Equipment-WEEE
- CE Declaration of Conformity
- Energy Star Declaration
- Federal Communications Commission (FCC) Notice (U. S. Only)
- Commission Federale de la Communication (FCC Declaration)
- EN 55022 Compliance (Czech Republic Only)
- VCCI Class 2 Notice (Japan Only)
- MIC Notice (South Korea Only)
- Polish Center for Testing and Certification Notice
- North Europe (Nordic Countries) Information
- BSMI Notice (Taiwan Only)
- Ergonomie Hinweis (nur Deutschland)
- Philips End-of-Life Disposal

Regulatory Information

TCO '99 Information

Congratulations! You have just purchased a TCO '99 approved and labeled product! Your choice has provided you with a product developed for professional use. Your purchase has also contributed to reducing the burden on the environment and also to the further development of environmentally adapted electronics products.

Why do we have environmentally labeled computers?

In many countries, environmental labeling has become an established method for encouraging the adaptation of goods and services to the environment. The main problem, as far as computers and other electronics equipment are concerned, is that environmentally harmful substances are used both in the products and during their manufacture. Since it is not so far possible to satisfactorily recycle the majority of electronics equipment, most of these potentially damaging substances sooner or later enter nature.

There are also other characteristics of a computer, such as energy consumption levels, that are important from the viewpoints of both the work (internal) and natural (external) environments. Since all methods of electricity generation have a negative effect on the environment (e.g. acidic and climate-influencing emissions, radioactive waste), it is vital to save energy. Electronics equipment in offices is often left running continuously and thereby consumes a lot of energy.

What does labeling involve?

This product meets the requirements for the TCO'99 scheme which provides for international and environmental labeling of personal computers. The labeling scheme was developed as a joint effort by the TCO (The Swedish Confederation of Professional Employees), Svenska Naturskyddsforeningen (The Swedish Society for Nature Conservation) and Statens Energimyndighet (The Swedish National Energy Administration).

Approval requirements cover a wide range of issues: environment, ergonomics, usability, emission of electric and magnetic fields, energy consumption and electrical and fire safety.

The environmental demands impose restrictions on the presence and use of heavy metals, brominated and chlorinated flame retardants, CFCs (freons) and chlorinated solvents, among other things. The product must be prepared for recycling and the manufacturer is obliged to have an environmental policy which must be adhered to in each country where the company implements its operational policy.

The energy requirements include a demand that the computer and/or display, after a certain period of inactivity, shall reduce its power consumption to a lower level in one or more stages. The length of time to reactivate the computer shall be reasonable for the user.

Labeled products must meet strict environmental demands, for example, in respect of the reduction of electric and magnetic fields, physical and visual ergonomics and good usability.

Below you will find a brief summary of the environmental requirements met by this product. The complete environmental criteria document may be ordered from:

- Information for UK only
- Troubleshooting
- Other Related Information
- Frequently Asked Questions (FAQs)

TCO Development

SE-114 94 Stockholm, Sweden

Fax: +46 8 782 92 07

Email (Internet): development@tco.se

Current information regarding TCO'99 approved and labeled products may also be obtained via the Internet, using the address: http://www.tco-info.com/

RETURN TO TOP OF THE PAGE

Environmental Requirements

Flame retardants

Flame retardants are present in printed circuit boards, cables, wires, casings and housings. Their purpose is to prevent, or at least to delay the spread of fire. Up to 30% of the plastic in a computer casing can consist of flame retardant substances. Most flame retardants contain bromine or chloride, and those flame retardants are chemically related to another group of environmental toxins, PCBs. Both the flame retardants containing bromine or chloride and the PCBs are suspected of giving rise to severe health effects, including reproductive damage in fish-eating birds and mammals, due to the bio-accumulative* processes. Flame retardants have been found in human blood and researchers fear that disturbances in fetus development may occur.

The relevant TCO'99 demand requires that plastic components weighing more than 25 grams must not contain flame retardants with organically bound bromine or chlorine. Flame retardants are allowed in the printed circuit boards since no substitutes are available.

Cadmium**

Cadmium is present in rechargeable batteries and in the color-generating layers of certain computer displays. Cadmium damages the nervous system and is toxic in high doses. The relevant TCO'99 requirement states that batteries, the color-generating layers of display screens and the electrical or electronics components must not contain any cadmium.

Mercury**

Mercury is sometimes found in batteries, relays and switches. It damages the nervous system and is toxic in high doses. The relevant TCO'99 requirement states that batteries may not contain any mercury. It also demands that mercury is not present in any of the electrical or electronics components associated with the labeled unit.

CFCs (freons)

The relevant TCO'99 requirement states that neither CFCs nor HCFCs may be used during the manufacture and assembly of the product. CFCs (freons) are sometimes used for washing printed circuit boards. CFCs break down ozone and thereby damage the ozone layer in the stratosphere, causing increased reception on earth of ultraviolet light with increased risks e.g. skin cancer (malignant melanoma) as a consequence.

Lead**

Lead can be found in picture tubes, display screens, solders and capacitors. Lead damages the

nervous system and in higher doses, causes lead poisoning. The relevant TCO'99 requirement permits the inclusion of lead since no replacement has yet been developed.

*** Bio-accumulative is defined as substances which accumulate within living organisms.**

**** Lead, Cadmium and Mercury are heavy metals which are bio-accumulative.**

RETURN TO TOP OF THE PAGE

TCO'03 Information

(Optional, only available for TCO'03 version)

Congratulations!
The display you have just purchased carries the TCO'03 Displays label. This means that your display is designed, manufactured and tested according to some of the strictest quality and environmental requirements in the world. This makes for a high performance product, designed with the user in focus that also minimizes the impact on our natural environment.

Some of the features of the TCO'03 Display requirements.

Ergonomics

- Good visual ergonomics and image quality in order to improve the working environment for the user and to reduce sight and strain problems. Important parameters are luminance, contrast, resoluction, reflectance, colour rendition and image stability.

Energy

- Energy-saving mode after a certain time-beneficial both for the user and the environment
- Electrical safety

Emissions

- Electromagnetic fields
- Noise emissions

Ecology

- The product must be prepared for recycling and the manufacturer must have a certified environmental management system such as EMAS or ISO 14 000
- Restrictions on
  - chlorinated and brominated flame retardants and polymers
  - heavy metals such as cadmium, mercury and lead.

The requirements included in this label have been developed by TCO Development in co-operation with scientists, experts, users as well as manufacturers all over the world. Since the end of the 1980s TCO has been involved in influencing the development of IT equipment in a more user-friendly direction. Our labelling system started with displays in 1992 and is now requested by users and IT-manufacturers all over the world.

For more information, please visit
www.tcodevelopment.com

RETURN TO TOP OF THE PAGE

Recycling Information for Customers

Philips establishes technically and economically viable objectives to optimize the environmental performance of the organization's product, service and activities.

From the planning, design and production stages, Philips emphasizes the important of making products that can easily be recycled. At Philips, end-of-life management primarily entails participation in national take-back initiatives and recycling programs whenever possible, preferably in cooperation with competitors.

There is currently a system of recycling up and running in the European countries, such as The Netherlands, Belgium, Norway, Sweden and Denmark.

In U.S.A., Philips Consumer Electronics North America has contributed funds for the Electronic Industries Alliance (EIA) Electronics Recycling Project and state recycling initiatives for end-of-life electronics products from household sources. In addition, the Northeast Recycling Council (NERC) - a multi-state non-profit organization focused on promoting recycling market development - plans to implement a recycling program.

In Asia Pacific, Taiwan, the products can be taken back by Environment Protection Administration (EPA) to follow the IT product recycling management process, detail can be found in web site www.epa.gov.tw

For help and service, please contact Consumers Information Center or F1rst Choice Contact Information Center in each country or the following team of Environmental specialist can help.

Mr. Job Chiu - Environment manager
Philips Electronics Industries (Taiwan) Ltd, Monitor Business Unit
E-mail: job.chiu@philips.com
Tel: +886 (0) 3 454 9839

Mr. Maarten ten Houten - Senior Environmental Consultant
Philips Consumer Electronics
E-mail: marten.ten.houten@philips.com
Tel: +31 (0) 40 27 33402

Mr. Delmer F. Teglas
Philips Consumer Electronics North America
E-mail: butch.teglas@philips.com
Tel: +1 865 521 4322

RETURN TO TOP OF THE PAGE

Waste Electrical and Electronic Equipment-WEEE

Attention users in European Union private households

This marking on the product or on its packaging illustrates that, under European Directive 2002/96/EG governing used electrical and electronic appliances, this product may not be disposed of with normal household waste. You are responsible for disposal of this equipment through a designated waste electrical and electronic equipment collection. To determine the locations for dropping off such waste electrical and electronic, contact your local government office, the waste disposal organization that serves your household or the store at which you purchased the product.

RETURN TO TOP OF THE PAGE

CE Declaration of Conformity

Philips Consumer Electronics declare under our responsibility that the product is in conformity with the following standards
- EN60950-1:2001 (Safety requirement of Information Technology Equipment)
- EN55022:1998 (Radio Disturbance requirement of Information Technology Equipment)
- EN55024:1998 (Immunity requirement of Information Technology Equipment)
- EN61000-3-2:2000 (Limits for Harmonic Current Emission)
- EN61000-3-3:1995 (Limitation of Voltage Fluctuation and Flicker)

following provisions of directives applicable
- 73/23/EEC (Low Voltage Directive)
- 89/336/EEC (EMC Directive)
- 93/68/EEC (Amendment of EMC and Low Voltage Directive)

and is produced by a manufacturing organization on ISO9000 level.

The product also comply with the following standards
- ISO9241-3, ISO9241-7, ISO9241-8 (Ergonomic requirement for Visual Display)
- ISO13406-2 (Ergonomic requirement for Flat panels)
- GS EK1-2000 (GS specification)
- prEN50279:1998 (Low Frequency Electric and Magnetic fields for Visual Display)
- MPR-II (MPR:1990:8/1990:10 Low Frequency Electric and Magnetic fields)
- TCO'99, TCO'03 (Requirement for Environment Labelling of Ergonomics, Energy, Ecology and Emission, TCO: Swedish Confederation of Professional Employees) for TCO versions

RETURN TO TOP OF THE PAGE

Energy Star Declaration

PHILIPS
170V6

This monitor is equipped with a function for saving energy which supports the VESA Display Power Management Signaling (DPMS) standard. This means that the monitor must be connected to a computer which supports VESA DPMS to fulfill the requirements in the NUTEK specification 803299/94. Time settings are adjusted from the system unit by software.

NUTEK	VESA State	LED Indicator	Power Consumption
Normal operation	ON (Active)	Green	< 30 W
Power Saving Alternative 2 One step	OFF (Sleep)	Amber	< 1 W
	Switch Off	Off	< 1 W

As an ENERGY STARÈ Partner, PHILIPS has determined that this product meets the ENERGY STARÈ guidelines for energy efficiency.

We recommend you switch off the monitor when it is not in use for quite a long time.

RETURN TO TOP OF THE PAGE

Federal Communications Commission (FCC) Notice (U.S. Only)

This equipment has been tested and found to comply with the limits for a Class B digital device, pursuant to Part 15 of the FCC Rules. These limits are designed to provide reasonable protection against harmful interference in a residential installation. This equipment generates, uses and can radiate radio frequency energy and, if not installed and used in accordance with the instructions, may cause harmful interference to radio communications. However, there is no guarantee that interference will not occur in a particular installation. If this equipment does cause harmful interference to radio or television reception, which can be determined by turning the equipment off and on, the user is encouraged to try to correct the interference by one or more of the following measures:

- Reorient or relocate the receiving antenna.
- Increase the separation between the equipment and receiver.
- Connect the equipment into an outlet on a circuit different from that to which the receiver is connected.
- Consult the dealer or an experienced radio/TV technician for help.

Changes or modifications not expressly approved by the party responsible for compliance could void the user's authority to operate the equipment.

Use only RF shielded cable that was supplied with the monitor when connecting this monitor to a computer device.

To prevent damage which may result in fire or shock hazard, do not expose this appliance to rain or excessive moisture.

THIS CLASS B DIGITAL APPARATUS MEETS ALL REQUIREMENTS OF THE CANADIAN INTERFERENCE-CAUSING EQUIPMENT REGULATIONS.

RETURN TO TOP OF THE PAGE

Commission Federale de la Communication (FCC Declaration)

Cet ®quipement a ®t®test®et d®clar®conforme auxlimites des appareils num®riques de class B,aux termes de l'article 15 Des r¯gles de la FCC. Ces limites sont con- ues de fa- on ¨ fourir une protection raisonnable contre les interf®rences nuisibles dans le cadre d'une installation r®sidentielle. CET appareil produit, utilise et peut ®mettre des hyperfr®quences qui, si l'appareil n'est pas install®et utilis®selon les consignes donn®es, peuvent causer des interf®rences nuisibles aux communications radio. Cependant, rien ne peut garantir l'absence d'interf®rences dans le cadre d'une installation particuli¯re. Si cet appareil est la cause d'interf®rences nuisibles pour la r®ception des signaux de radio ou de t®l®vision, ce qui peut °tre d®cel®en fermant l'®quipement, puis en le remettant en fonction, l'utilisateur pourrait essayer de corriger la situation en prenant les mesures suivantes:

- R®orienter ou d®placer l'antenne de r®ception.
- Augmenter la distance entre l'®quipement et le r®cepteur.
- Brancher l'®quipement sur un autre circuit que celui utilis®par le r®cepteur.
- Demander l'aide du marchand ou d'un technicien chevronn®en radio/t®l®vision.

Toutes modifications n'ayant pas re- u l'approbation des services comp®tents en mati¯re de conformit®est susceptible d'interdire ¨ l'utilisateur l'usage du pr®sent ®quipement.

N'utiliser que des c©bles RF arm®s pour les connections avec des ordinateurs ou p®riph®riques.

CET APPAREIL NUMERIQUE DE LA CLASSE B RESPECTE TOUTES LES EXIGENCES DU REGLEMENT SUR LE MATERIEL BROUILLEUR DU CANADA.

RETURN TO TOP OF THE PAGE

EN 55022 Compliance (Czech Republic Only)

This device belongs to category B devices as described in EN 55022, unless it is specifically stated that it is a Class A device on the specification label. The following applies to devices in Class A of EN 55022 (radius of protection up to 30 meters). The user of the device is obliged to take all steps necessary to remove sources of interference to telecommunication or other devices.

Pokud není na typovém štítku počítače uvedeno, že spadá do do třídy A podle EN 55022, spadá automaticky do třídy B podle EN 55022. Pro zařízení zařazená do třídy A (chranné pásmo 30m) podle EN 55022 platí následující. Dojde-li k rušení telekomunikačních nebo jiných zařízení je uživatel povinnen provést taková opatřgní, aby rušení odstranil.

RETURN TO TOP OF THE PAGE

VCCI Notice (Japan Only)

This is a Class B product based on the standard of the Voluntary Control Council for Interference (VCCI) for Information technology equipment. If this equipment is used near a radio or television receiver in a domestic environment, it may cause radio Interference. Install and use the equipment according to the instruction manual.

Class B ITE

この装置は、情報処理装置等電波障害自主規制協議会 (VCCI) の基準に基づくクラス B 情報技術装置です。この装置は家庭環境で使用することを目的としていますが、この装置がラジオやテレビジョン受信機に近接して使用されると、受信障害を引き起こすことがあります。
取扱説明書に従って正しい取り扱いをして下さい。

RETURN TO TOP OF THE PAGE

MIC Notice (South Korea Only)

Class B Device

장치 종류	사용자 안내문
B급 기기	이 장치는 가정용으로 전자파 적합등록을 한 장치로서 주거지역에서는 물론 모든 지역에서 사용할 수 있습니다.

Please note that this device has been approved for non-business purposes and may be used in any environment, including residential areas.

RETURN TO TOP OF THE PAGE

Polish Center for Testing and Certification Notice

The equipment should draw power from a socket with an attached protection circuit (a three-prong socket). All equipment that works together (computer, monitor, printer, and so on) should have the same power supply source.

The phasing conductor of the room's electrical installation should have a reserve short-circuit protection device in the form of a fuse with a nominal value no larger than 16 amperes (A).

To completely switch off the equipment, the power supply cable must be removed from the power supply socket, which should be located near the equipment and easily accessible.

A protection mark "B" confirms that the equipment is in compliance with the protection usage requirements of standards PN-93/T-42107 and PN-89/E-06251.

Wymagania Polskiego Centrum Badań i Certyfikacji

Urządzenie powinno być zasilane z gniazda z przyłączonym obwodem ochronnym (gniazdo z kołkiem). Współpracujące ze sobą urządzenia (komputer, monitor, drukarka) powinny być zasilane z tego samego źródła.

Instalacja elektryczna pomieszczenia powinna zawierać w przewodzie fazowym rezerwową ochronę przed zwarciami, w postaci bezpiecznika o wartości znamionowej nie większej niż 16A (amperów).

W celu całkowitego wyłączenia urządzenia z sieci zasilania, należy wyjąć wtyczkę kabla zasilającego z gniazdka, które powinno znajdować się w pobliżu urządzenia i być łatwo dostępne.

Znak bezpieczeństwa "B" potwierdza zgodność urządzenia z wymaganiami bezpieczeństwa użytkowania zawartymi w PN-93/T-42107 i PN-89/E-06251.

Pozostałe instrukcje bezpieczeństwa

- Nie należy używać wtyczek adapterowych lub usuwać kołka obwodu ochronnego z wtyczki. Jeżeli konieczne jest użycie przedłużacza to należy użyć przedłużacza 3-żyłowego z prawidłowo połączonym przewodem ochronnym.
- System komputerowy należy zabezpieczyć przed nagłymi, chwilowymi wzrostami lub spadkami napięcia, używając eliminatora przepięć, urządzenia dopasowującego lub bezzakłóceniowego źródła zasilania.
- Należy upewnić się, aby nic nie leżało na kablach systemu komputerowego, oraz aby kable nie były umieszczone w miejscu, gdzie można byłoby na nie nadeptywać lub potykać się o nie.
- Nie należy rozlewać napojów ani innych płynów na system komputerowy.
- Nie należy wpychać żadnych przedmiotów do otworów systemu komputerowego, gdyż może to spowodować pożar lub porażenie prądem, poprzez zwarcie elementów wewnętrznych.
- System komputerowy powinien znajdować się z dala od grzejników i źródeł ciepła. Ponadto, nie należy blokować otworów wentylacyjnych. Należy unikać kładzenia luźnych papierów pod komputer oraz umieszczania komputera w ciasnym miejscu bez możliwości cyrkulacji powietrza wokół niego.

RETURN TO TOP OF THE PAGE

North Europe (Nordic Countries) Information

Placering/Ventilation

VARNING:

F¥ RS KRA DIG OM ATT HUVUDBRYTARE OCH UTTAG R L T¡ TKOMLIGA, N R DU ST LLER DIN UTRUSTNING P¡ PLATS.

Placering/Ventilation

ADVARSEL:

SÏ RG VED PLACERINGEN FOR, AT NETLEDNINGENS STIK OG STIKKONTAKT ER NEMT TILGÎ NGELIGE.

Paikka/Ilmankierto

VAROITUS:

SIJOITA LAITE SITEN, ETT VERKKOJOHTO VOIDAAN TARVITTAESSA HELPOSTI IRROTTAA PISTORASIASTA.

Plassering/Ventilasjon

ADVARSEL:

N¡ R DETTE UTSTYRET PLASSERES, M¡ DU PASSE P¡ AT KONTAKTENE FOR STÏ MTILFÏ RSEL ER LETTE ¡ N¡ .

RETURN TO TOP OF THE PAGE

BSMI Notice (Taiwan Only)

符合乙類資訊產品之標準

RETURN TO TOP OF THE PAGE

Ergonomie Hinweis (nur Deutschland)

Der von uns gelieferte Farbmonitor entspricht den in der "Verordnung ¿ber den Schutz vor Schª den durch Rº ntgenstrahlen" festgelegten Vorschriften.

Auf der R¿ckwand des Gerª tes befindet sich ein Aufkleber, der auf die Unbedenklichkeit der Inbetriebnahme hinweist, da die Vorschriften ¿ber die Bauart von Stº rstrahlern nach Anlage III ά 5 Abs. 4 der Rº ntgenverordnung erf¿llt sind.

Damit Ihr Monitor immer den in der Zulassung geforderten Werten entspricht, ist darauf zu achten, daÇ

1. Reparaturen nur durch Fachpersonal durchgef¿hrt werden.
2. nur original-Ersatzteile verwendet werden.
3. bei Ersatz der Bildrº hre nur eine bauartgleiche eingebaut wird.

Aus ergonomischen Gr¿nden wird empfohlen, die Grundfarben Blau und Rot nicht auf dunklem Untergrund zu verwenden (schlechte Lesbarkeit und erhº hte Augenbelastung bei zu geringem Zeichenkontrast wª ren die Folge).

Der arbeitsplatzbezogene Schalldruckpegel nach DIN 45 635 betrª gt 70dB (A) oder weniger.

ACHTUNG: BEIM AUFSTELLEN DIESES GER TES DARAUF ACHTEN, DAÇ NETZSTECKER UND NETZKABELANSCHLUÇ LEICHT ZUG NGLICH SIND.

RETURN TO TOP OF THE PAGE

End-of-Life Disposal

Your new monitor contains materials that can be recycled and reused. Specialized companies can recycle your product to increase the amount of reusable materials and to minimize the amount to be

disposed of.

Please find out about the local regulations on how to dispose of your old monitor from your local Philips dealer.

(For customers in Canada and U.S.A.)
This product may contain lead and/or mercury. Dispose of in accordance to local-state and federal regulations.
For additional information on recycling contact www.eia.org (Consumer Education Initiative)

RETURN TO TOP OF THE PAGE

Information for UK only

WARNING - THIS APPLIANCE MUST BE EARTHED.

Important:

This apparatus is supplied with an approved moulded 13A plug. To change a fuse in this type of plug proceed as follows:

1. Remove fuse cover and fuse.

2. Fit new fuse which should be a BS 1362 5A,A. S.T.A. or BSI approved type.

3. Refit the fuse cover.

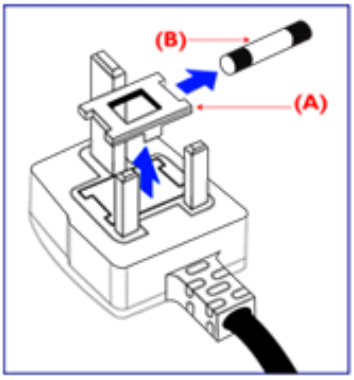

If the fitted plug is not suitable for your socket outlets, it should be cut off and an appropriate 3-pin plug fitted in its place.

If the mains plug contains a fuse, this should have a value of 5A. If a plug without a fuse is used, the fuse at the distribution board should not be greater than 5A.

Note: The severed plug must be destroyed to avoid a possible shock hazard should it be inserted into a 13A socket elsewhere.

How to connect a plug

The wires in the mains lead are coloured in accordance with the following code:

BLUE - "NEUTRAL" ("N")

BROWN - "LIVE" ("L")

GREEN & YELLOW - "EARTH" ("E")

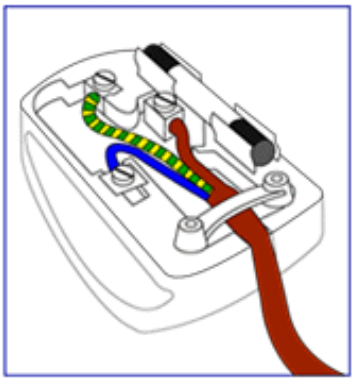

1. The GREEN AND YELLOW wire must be connected to the terminal in the plug which is marked with the letter "E" or by the Earth symbol ⏚ or coloured GREEN or GREEN AND YELLOW.

2. The BLUE wire must be connected to the terminal which is marked with the letter "N" or coloured BLACK.

3. The BROWN wire must be connected to the terminal which marked with the letter "L" or coloured RED.

Before replacing the plug cover, make certain that the cord grip is clamped over the sheath of the lead - not simply over the three wires.

RETURN TO TOP OF THE PAGE

dgvx,˘ ˝ ˛ ˛˛ ˛˛˛ ˛˛˛

∧ bzdk2ujdf dL H¿ dbzfw

υ¿ ¿ ¬dbzfujfn¿df¿
¬Otc0¿lsjtcdfnjsdf¿df
[⊙ tc¿jh ⊙x h ⊙w
fnjftsfnjsB dbsfnjs df
tftc¿j H0⊙tcdlsj dz dbs
dk2fnjstdsj dbdz ¿
tc¿j×dfdz
ϕ0lstsdz⊙lsdujfn¿df?
tc¿j×dfdz
‹dj tcdsfnB¿tc¿j×¿dbzfw
∧ dL dujfn¿df¿
¬Otc0¿lsjtcdfnjsdf¿df
l ⊙ dk2ujdbzf¿
fnjdtk2dz dk ¬
0r 0ts H ts0
J dj h dbz? 0dH
dj sdbzflsstc⊙tftsH
tc⊙ dk dz fzcdk2dzf

‡ tsdbzflsdf¿⊙¿tsdzfj⊙dbzfdf Philips 0 tslsdbzsh ¿dbzfdf H¿w ¿¿lsts0 tfdf¿fnjdj?

‡ tsdbzflsdf¿⊙¿tsdzfj⊙dbzfdf Philips 0 tslsdbzsh ¿dbzfdf H¿w ¿¿lsts0 tfdf¿fnjdj? dk2⊙dj sdbzflsstc⊙¬ fnj tfdbzsfn¿dfdzf dfdbzdf¿⊙lsstcdk dzf tf⊙dj dw dzf

¿tsdzfj⊙dbzfw Philips tftcfdk2cc⊙¿jls0fnj lzfnjfdbzfw Hdw lstsdts, ujstsBr L⊙¿⊙ujf¿lz tftsfnjs⊙0dw dk2⊙fnj tftdsHlz¿ujfw lstsdz¿ts fnj⊙dzjsdts0r fnjs¿tsdts¿⊙ujfnjs0⊙ ∫ r tftcfdzjdw¿dzjdk2⊙fBtsdz¿j tf¿jtc¿Htsr ¿ ls¿¬dbsdbsdfdf tftdsfLBtsHfnjs0⊙df fnjsdts×⊙?h df? ¿tsdbsdtsdz ¿⊙ujfnjs0⊙tftdsHlz¿ujdf. ∫ Hdk2¿tsdbsdH⊙dj0tsLdzs×dbs dLBj×⊙ls tftsw0dzjdbzfw Hj w ¿¿lsts0 0 tfdf¿fnjdw¬ df fnjBtftdf¿fnjdw¬, dfnftsdz LlzjdzB ¬0r ¿ tf⊙dj dw¬ fn lstsdk2tstfdzjdbsudk dzf lstc⊙dzdfnjsdstc⊙dzf, tftcfdzjdw¿dzB ¬ tftcf tftdsfLBtsHfnjs0¿ dzsdbzflsstdts0 fn tfdbsfn¿dfdzf dfdbzdf¿⊙lsstcdk dzf tf⊙dj dw dzf. l df tsHdfdzfLBdsstcs0dlsjdz dj dzs×¿ls0tc⊙dbsfdtdts0⊙ls, ujstsfnj 0r tftzfn¿⊙¿dB ¿ tf⊙dj dzf BlzHlzsfnjsH¿tc×⊙ls lstsdz¿ts B¿LH¿w ¿¿lsk ¿ tfdf¿fnjdzf. ∫ Hdk2¿tsdzfj⊙dbzfw Philips 0⊙tc⊙dbsfdtdz¿ls, ujstsdk Bts? dzsdbzflsstc fndj Htsftzfnjsfdz dzujfnjdtsdzHj w ¿¿lsts0 Blz¿ls tslstc¿dzsdbsfdtdts0⊙dbzfdzf L⊙dzjdj dk0 fnjstsls0¿ls fnjs0df fntftc¿HtsfnjS⊙dw¿dzs? dk2⊙dj dts0⊙tc⊙dbsfdj? . J H⊙dbdbsdz tc⊙L Hj dj tsftfnjdk tc⊙L dk ¿ lsftfr Hj w ¿¿lsts0 tfdf¿fnjdj? df tsftc¿Hj dj dbs Htsftzfnjsfdzs¿ ujfnjdts Hj w ¿¿lsts0 Hdw ¿⊙¿Htsdts lsftf⊙ ¬ dw lstsdts ujstsBr tftcfdwls tc¿jh ¿dbzf¿ ts tc¿jdzsdbs¿ dfdzf L⊙dzjdj dzsdbzflsstc⊙0 tc⊙dz¿⊙¬ tftc¿Htsfnjs⊙0dj dbdts? dk2⊙dj dts0⊙tc⊙dbsfdf, ujfnjdts Hj w ¿¿lsts0 0r ¿ tf⊙dj dzf fnjlstsdk2tstfdj dbsudk dzf lstc⊙dzdfnjsstc⊙dzf Htsdzj dbs tc¿j0r fnjfls ‹lsf Htstfzfnjsfdz ¿ lzfdts0dzf. l ⊙ftcfdzjtc, 0 15-H¿ ?dzs0tsdz dzsdbzflsstc¿ XGA (tc⊙fnh dtc¿jdbs? dtc⊙w dujfn¿ts? ⊙tc¬dfls¿¿lsdztc) dzsdzls Br ls H¿w ¿¿lsdk dzf dj Btsdj¿ 0,0004% fnjzBtfdf¿fnjdj? . ¿tdsdzj lstsdts, tftsfn¿tsdz¿lz dj¿tslstsdr ¿ fnjsujls⊙dbzfw Hj w ¿¿lsts0 tfdf¿fnjdj? Btsdj¿ L⊙dzjlsdk , ujdzHtdzdf¿ , ¿tsdzfj⊙dbzfw Philips lzfnjs⊙dk2⊙dzf0⊙¿jls Hdw dbzf¬ Btsdj¿ ×¿fnjs¿df¿ fnjs⊙dbz⊙dsr ¿⊙ujfnjs0⊙ u⊙¿lz¿ tftsdzfls df¿lz dz tftds0tsHdz0ts0fnjdzdzf tc¿j .

‡ df¿fnjdzf df fnjzBtfdf¿fnjdzf

‡ df¿fnjdz , dfdzf ‹dj dzjdbs dL tsBtc⊙×¿dbzfw, fnjsfnjstsdls dL lstc¿¬ fnjzBtfdf¿fnjdj? tsfndbs0dk ¬ up¿lsts0 - ¿tc⊙fndbsdts, L¿dj dbsdts df fnfdj dts. R L dzdbs×¿fnjs0⊙tfdf¿fnjdj? w tstdzdzftdz¿lsfnv dL tsBtc⊙×¿dzf¿ . ¿tsdH0 0fnj fnjzBtfdf¿fnjdzf, tsBtc⊙Lzx h df¿ tfdf¿fnjdz , fnp¿lsvlsfnv , lstdf up¿lsdk ¬ fnjzBtfdf¿fnjdw w tstdzdzftdzx lstsH df dzB¿dz ? tfdf¿fnjdz . u⊙tdf fnjzBtfdf¿fnjdw lsj dzdbsdts dzdbs×¿fnjs0⊙tsBtc⊙Lzx lsujtdk ? tfdf¿fnjdz . l tdzdzf¿ fnjsujlsdbzfw fnp¿lsvh df¬fnv df dj fnp¿lsvh df¬fnv fnjzBtfdf¿fnjdj? 0r dbzvHvlsf¿⊙¿ ¿Hdk ¿ tfdf¿fnjdzf Hdzdzf¬ up¿lsts0.

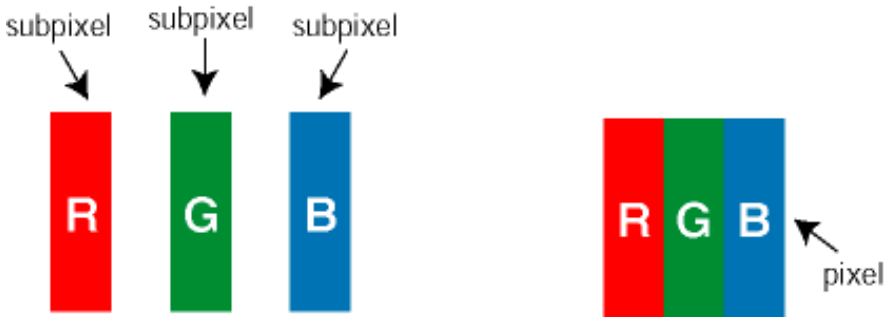

u df¿fr H¿w ¿¿lsts0 tfdf¿fnjdj?

l ¿w ¿¿lsr tfdf¿fnjdj? df fnjzBtfdf¿fnjdj? tftdsw0dzvB lsfnv dk2‹ ¿tc⊙dj tfts-tc⊙L dbsdkz. ∫ tftc¿Hj dj dk H0¿ ¿⊙lsj dtsdzf Hj w ¿¿lsts0 tfdf¿fnjdj? df dj fn¿tsdz¿ts lsf¿tfts0 Hj w ¿¿lsts0 fnjzBtfdf¿fnjdj? 0 ¿⊙¿Htsdf df‹ lsf¬ ¿⊙lsj dtsdzf? .

l ¿w ¿¿lsr 0 0df Hj wtc¿df¬ lstsujf tftdsw0dzvB lsfnv 0 0df Hj tfdf¿fnjdj? df dzf fnjzBtfdf¿fnjdj? , ¿tslstsdr ¿ 0fnj dH fnp¿lsvlsfnv df dzf ç0¿dz ujdk è. u ts¿jfnjs wtc¿⊙v ls tsujf⊙ï ‹lsts fnjzBtfdf¿fnjdz , ¿tslstsdr ? 0r Hj dwjlsfnv dk2‹ ¿tc⊙dj , ¿tsH⊙dj sdbzflsstc tslstsBtc⊙×⊙jls lsj dj dbsj df‹ tsBtc⊙×¿dbzfj .
l ¿w ¿¿lsr 0 0df Hj wtc¿df¬ lstsujf tftsHtc⊙L Hj dzvB lsfnv dk2fndj Hlzx h df¿ lsf tfr :

h ˆ ˜ ° ˜ ° ˜ ˜ ˜

170V6	170S6	170B6	170P6
5 ف دزيج ايف	5 ف دزيج ايف	0	0

170V6	170S6	170B6	170P6
4 ف دزيج ايف	4 ف دزيج ايف	0	0
2 ف دزيج ايف	2 ف دزيج ايف	0	0
0	0	0	0
15 mm ف بتسدزيج ايف	15 mm ف بتسدزيج ايف	0	0
4 ف دزيج ايف	4 ف دزيج ايف	0	0
2 ف دزيج ايف	2 ف دزيج ايف	0	0
0	0	0	0
15 mm ف بتسدزيج ايف	15 mm ف بتسدزيج ايف	0	0
4 ف دزيج ايف	4 ف دزيج ايف	0	0
2 ف دزيج ايف	2 ف دزيج ايف	0	0
0	0	0	0
4 ف دزيج ايف	4 ف دزيج ايف	0	0

J frj dtsdzfls tstc ¢tsdzf Odzfcf Philips frjstsls ǝj ls frjs ǝlz ls frjs Odzc Odzc ls lz ISO13406-2.

Eyx lφ]ΩΗ η ∫φΑφ ls η φ] r l ƒ r

ขั้นตอนการติดตั้งจอภาพ

ขั้นตอนการติดตั้งจอภาพ?

ใช้ตามขั้นตอนต่อไปนี้.

ตรวจสอบรายการ	รายการที่ต้องเตรียม
	1) เตรียมสายไฟ (ตรวจสอบให้แน่ใจว่าสายไฟที่ใช้ได้กับแหล่งจ่ายไฟในพื้นที่ของคุณ, ดูรายละเอียดเกี่ยวกับการเลือกสายไฟ)
	2) ต่อเข้ากับเครื่อง Macintosh (ต้องใช้อะแดปเตอร์ Macintosh)
	3) ขั้วต่อสายสัญญาณ VGA
	4) ขั้นตอนการติดตั้ง E-DFU ในซีดีรอมที่ให้มาพร้อมกับจอภาพ CD-ROM.

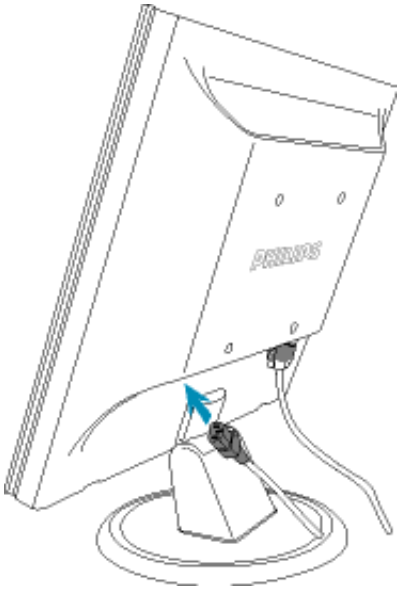

1) ৲ ⊙ ⊕ ⊔ ⊐ ⊲ ⊡ ⊠ ⊟ ⊤ ⊥ ⊢ ⊣ ⊥ ⊤ ⊢ ⊥ ⊤ ⊢ ⊥ ⊤ ⊢

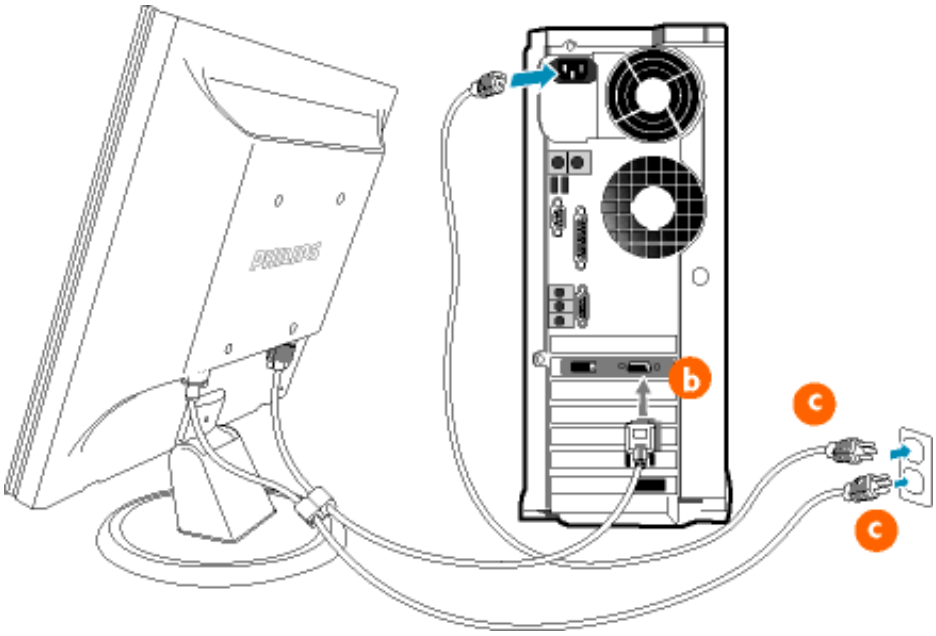

2)] tsHfrJsj.HcfdbjdbZfj ?] ş

(a) J r ?dz ^ ugfJsj ?tsdbJf r ʁ lsj.tcc f ɵr lsʷdbZfJsj ?O3j.dz tJcfJsOdbZfʷ

(b)] tsHfrJsj.HcfdbZfJsj frgfcdbZdz dbZ ? ?O3j.dz dbJsdbZfJststcO?tcO.j j.dbJz ç ɵcfH.j.ts è dbZ
tsstcOJsdbZs? frJststcatsdbj ?tsdbJf r ʁ lsj.tcO

(c) J frJsO3r lsj h dbZtc tJcfJsOdbZfʷ ?tsdbJf r ʁ lsj.tcO cf dbJsdbZfJststcO ɵ tcatsu.j.lsÇlz.

(d) J ?dz ^ ugfJsj ?tsdbJf r ʁ lsj.tcc f dbJsdbZfJststc. [frgdz[dbZ dbJsdbZfJststc ɵr ɵtsHcfJsfrʷ
cfLtsstcO>H.j.dbZf.j , lstsʌzfrJsOdbZs ?O1O3j.tch j.dbZ

Ez y ʁ l ɸ] ɔ ħ n J ɸ ʎ ɸ l s ɔ ɸ] r l J r

ʃ tʃ dʃfrʃ⊙dzʃ¸j
dʒ¾sdzʃ¼stsc⊙ ə dʃH
frʃʃ¸j tc¾j H dʃ
ʃ¾ tsdʒʃ dzʃ¸ʃ¼s
tʃ tcʃdzʃ⊙H dzʃ¸k dzʃsfrʃ¼sʃ¸j ?
ʃ tsH¼ʃ¼dz ηj¸dzʃ¸j ¼
ʃ ¾
ʃ tsH dzʃ¼stsʃ¼s⊙¼⊙ ¼
L⊙ʃ tzfrʃ¼tz
ʃ tʃ ʃ¼sʃdzʃ¾dʃL⊙ʃ¼dʃw
tc⊙B tsʃ¼dʃ¼
¼⊙tc⊙¼ʃ¼sʃ¸j tcʃfrʃ¼sʃ¼
ʃ ⊙L dzʃ¼sʃ¸j
tsfrʃ¼ʃ¼s⊙ʃ¼dzʃ¸j
H dzʃ¼sʃ¸j
tsfrʃ¼ʃ¼s⊙ʃ¼dzʃ¸j
H dzʃ¼sʃ¸j
tsfrʃ¼ʃ¼s⊙ʃ¼dzʃw

ʃ frʃ¼ʃ¼s⊙ʃ¼dzʃ¸j

¼s⊙¼ tc⊙L dzʃ¼sʃ¸j ʃ frʃ¼ʃ¼sʃ¸j ʃ¼sfrʃ¼ʃ¼s⊙ʃ¼dzʃ¸j

ʃ ⊙L dzʃ¼sʃ¸j ʃ¼sfrʃ¼ʃ¼s⊙ʃ¼dzʃ¸j

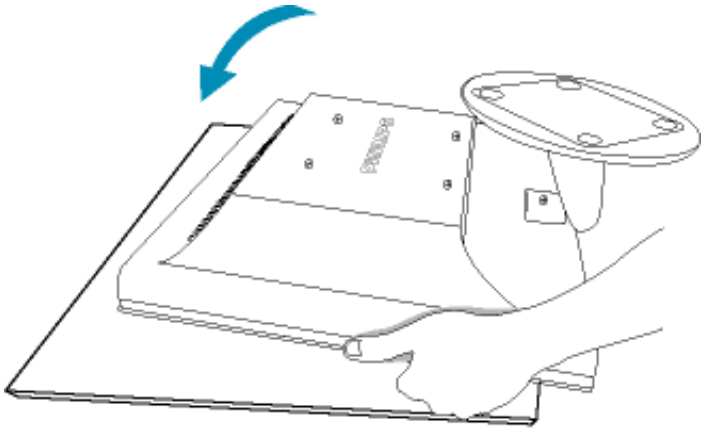

1) ʃ tsdzʃ¼sʃ¸j dʒ¾sdzʃ¼stsc dzʃ¾⊙ ʃ¼s⊙¸j tc⊙H¼z tʃ tsʃ⊙¸j tc¼⊙dzʃ¼sfrʃ¼s dzʃ¾ʃ¼¸j ə tsʃ¾ frʃ¼stsc¼tsdzʃ¼s ə dzʃ¾ʃ¼L.

2) ʃ¸r ʃ¼sw dzʃ¾ʃ¼¸j frʃ¼stsʃ¾ʃ¼z.

H dzʃ¼sʃ¸j ʃ¼sfrʃ¼ʃ¼s⊙ʃ¼dzʃ¸j

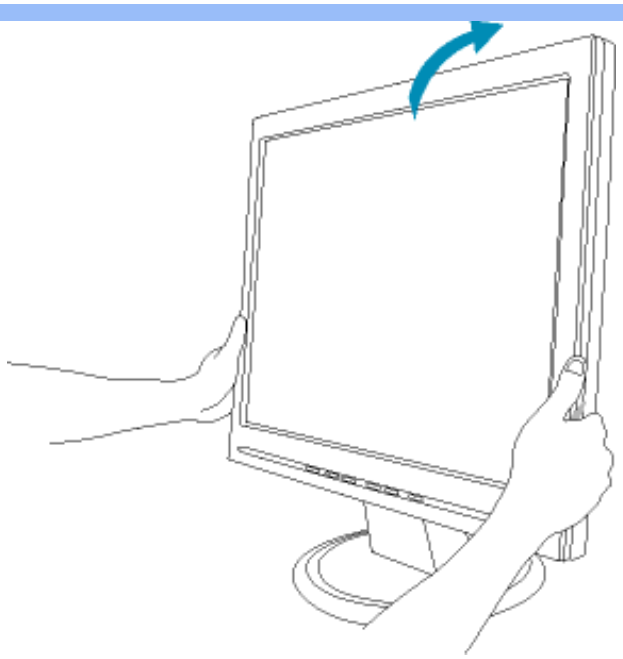

1) ιΟΗdzΠsj dzΟtΠjtcj Hdz ΒΟΠs dzsdzΠsstcΟ.

Ξyβ ιφ]ΩΗ η Πφ΄φ ιš Ωφ]ΠΠΠ

Η dzΙsΠj tsΠnΠzsΟdzΠw

υΠnΠzsΟΠw:

- Hdzw lsΠtΠsΟr ΠΗ ΟΟtcΠΟdΠzsΟ lΖΠnΠsΟdzsΟΠcΠ VESA

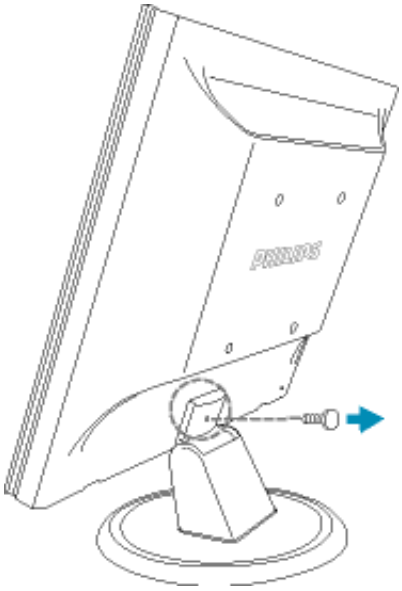

1) Π lΟΟcΠdzsΠsj ΟcΠdzs, ιΟΟsj dzΠnΠzΠdzΠsj ΟjtcΠdz Β ΟtΟ h ΟΠΖ.

2) Η σύνδεση του καλωδίου 3 εξαρτάται από τον τύπο καλωδίου που χρησιμοποιείτε. Ακολουθήστε τις οδηγίες σύνδεσης.

Η τοποθέτηση σύμφωνα με τα πρότυπα VESA: Η οθόνη διαθέτει πρότυπο VESA-διεπαφή 100 χιλιοστών.

] tsHctslstsoÇ⊙Ç LO∫lzfr∫Çlz

∫ tf∫cfr∫⊙dz∫j
cd∫sdz∫lststc⊙
ocfH frf∫j tc∫j Hcf
] tsHÇdz ∪j dz∫j
Ç] Ç
] tsHctslstsoÇ⊙Ç
LO∫lzfr∫Çlz
∫ tf∫lsfcd∫cfL⊙∪pf^w
tc⊙B tsu∫f∫
∫⊙tc⊙Ç∫lsj tocfr∫sfÇ

] tsHctslstsoÇ⊙Ç LO∫lzfr∫Çlz

] tsdz LtsO⊙dz∫j ^w O?dzsdz∫ fr∫cfdz^ tstcd∫⊙∪pf∫j? tsB lzfr∫stcts? fr∫soj (INF-^w O?dzsdz∫) Hdz^ WindowsÈ 95/98/2000/Me/XP cfdzf Btsdz∫j tf∫tsLHdz∫∫ oj tcfr∫?

∫ tsdz∫lststc tf∫tcsfLotsHr∫soO Philips tsBdz⊙H⊙ lsofr∫stcts∫j dz∫ts? ^w lzd⊙∪pf∫j? VESA DDC2B, tf∫tsLotsdz^ ^ j? cfd∫tf∫tsHHj tc>Hcfo⊙ls lstcj Bts⊙dz∫^ Plug & Play tsf∫j tc⊙∪pf∫tsdz∫∫ fr∫f∫r∫j d∫WindowsÈ 95/98/2000/Me/XP. Ylstsr LO∫tdzLcf∫ls cfd∫ tstcd∫⊙∪pf∫ ts d∫sdz∫lststc∫j Philips o Hcf⊙dtsctsotsj ts⊙dts "∫ tsdz∫lststc" WindowsÈ 95/98/2000/Me/XP cf tsBj fr∫j ∪f∫ls ⊙tstctcj ⊙lsdz lzfr∫s⊙dtsoÇlz Htc⊙?oj tc⊙Plug & Play d∫sdz∫lststc⊙, dzj tsB∫tsHcfd∫s lzfr∫s⊙dtsocfls ^w O?dzfr∫cfd∫ tstcd∫⊙∪pf∫j? tsB tstcdzHtsO⊙dz∫cf (.inf). r ⊙dzj tf∫tcfotsHcfl∫r^ tsf∫cfr∫⊙dz∫j tf∫tcsu∫j Hlztc lzfr∫s⊙dtsocf Hdz^ WindowsÈ '95 OEM Release 2 , 98 , Me, XP cf 2000:

WindowsÈ 95

/,] O∫lzfr∫sfls WindowsÈ '95
0,] O>d∫fls ⊙dtsf∫⊙lz '] lzfr∫', or Bj tcfls] O r∫stcts?⊙O, '] O dzj dz lzf∫tcO⊙dzj dz∫^'.
1, r oO>Hr ^ j d?dz∫ls tf∫ts Ldz⊙u⊙lz '⊙ ⊙tcO dz.
2, Jr Bj tcfls o⊙dz⊙H⊙lz '] O tcO dzj lstc ' cf dz⊙>d∫fls ⊙dtsf∫⊙lz 'r tsf∫tsdz∫lsj dz dts'.
3, Jr Bj tcfls o⊙dz⊙H⊙lz '∫ tsdz∫lststc, dz⊙>d∫fls ⊙dtsf∫⊙lz 'R Ldzj dz∫ls é ', LOlsj d∫dz⊙>d∫fls ⊙dtsf∫⊙lz 'u fr∫s⊙dtsocfls fr∫Hcfr∫⊙..'.
4,] O>d∫fls ⊙dtsf∫⊙lz '∫ BLtstc..', or Bj tcfls Blz⊙olz dz⊙⊙tsf∫cfls j dz^, fr∫stslsoj lsfr∫soIz^ ^ lz^ lzfr∫stcts? fr∫soIz ∪j dz∫^ ⊙tsdf∫⊙⊙ls Hcfr∫⊙tso (CD-ROM), cf dz⊙>d∫fls ⊙dtsf∫⊙lz 'OK'.
5,] O>d∫fls ⊙dtsf∫⊙lz 'OK', or Bj tcfls d∫sH j dz fr∫tsj ⊙ts d∫sdz∫lststc⊙, cf dz⊙>d∫fls ⊙dtsf∫⊙lz 'OK'.
6,] O>d∫fls ⊙dtsf∫⊙lz '] O⊙tc lsr '.

WindowsÈ 98

/,] O∫lzfr∫sfls WindowsÈ 98
0, 2.] O>d∫fls ⊙dtsf∫⊙lz '] lzfr∫', or Bj tcfls] O r∫stcts? ⊙O, '] O dzj dz lzf∫tcO⊙dzj dz∫^'.
1, r oO>Hr ^ j d?dz∫ls tf∫ts Ldz⊙u⊙lz '⊙ ⊙tcO dz.
2, Jr Bj tcfls o⊙dz⊙H⊙lz '] O tcO dzj lstc ' cf dz⊙>d∫fls ⊙dtsf∫⊙lz 'r tsf∫tsdz∫lsj dz dts'.
3, Jr Bj tcfls o⊙dz⊙H⊙lz '∫ tsdz∫lststc, dz⊙>d∫fls ⊙dtsf∫⊙lz 'R Ldzj dz∫ls é ', LOlsj d∫dz⊙>d∫fls ⊙dtsf∫⊙lz 'r O dzj j'.
4, Jr Bj tcfls "∫ lstsB tc⊙ cfls fr∫cfr∫s⊙ofr∫j∫∫ Htc⊙?oj tcfsO, ∪lstsB^ or d∫sdz∫ or Btc⊙ls dz⊙cfBtsdzj j tf∫tsH∫∫tsH^h cf? cfL dz∫∫.", dz⊙>d∫fls ⊙dtsf∫⊙lz 'r O dzj j', LOlsj d∫dz⊙>d∫fls dz⊙⊙dtsf∫⊙lz 'u fr∫s⊙dtsocfls fr∫Hcfr∫⊙.
5,] O>d∫fls ⊙dtsf∫⊙lz '∫ BLtstc..', or Bj tcfls Blz⊙olz dz⊙⊙tsf∫cfls j dz^, fr∫stslsoj lsfr∫soIz^ ^ lz^ lzfr∫stcts? fr∫soIz ∪j dz∫^ ⊙tsdf∫⊙⊙ls Hcfr∫⊙tso (CD-ROM), cf dz⊙>d∫fls ⊙dtsf∫⊙lz 'OK'.
6,] O>d∫fls ⊙dtsf∫⊙lz 'OK', or Bj tcfls d∫sH j dz fr∫tsj ⊙ts d∫sdz∫lststc⊙, dz⊙>d∫fls ⊙dtsf∫⊙lz 'r O dzj j', LOlsj d∫dz⊙>d∫fls ⊙dtsf∫⊙lz 'r O dzj j'.
7,] O>d∫fls ⊙dtsf∫⊙lz '] tslstsoIs, LOlsj d∫dz⊙>d∫fls ⊙dtsf∫⊙lz '] O⊙tc lsr '.

WindowsÈ Me

/,] O∫lzfr∫sfls WindowsÈ Me

0, ¸ ⊙ㅣ d3ㄱlsj ㄱdbstJㄱlz 'Start', ə r в¸ jtaㄱlsj 'Settings', 'Control Panel'.
1, ㄱ ə⊙ㅣ H r h ¸ jd£dbㄱlsj tJts L dㄹ⊙uㄱlz 'Display'.
2, ⌋ r в¸ jtaㄱlsj əㄱdㄹ⊙Hㄱlz 'Settings' ㄱ dㄹ⊙ㅣ d3ㄱlsj ㄱdbstJㄱlz 'Advanced...'.
3, ⌋ r в¸ jtaㄱlsj əㄱdㄹ⊙Hㄱlz 'Monitor' ㄱ dㄹ⊙ㅣ d3ㄱlsj ㄱdbstJㄱlz 'Change...'.
4, ⌋ r в¸ jtaㄱlsj "Specify the location of the driver(Advanced)", dㄹ⊙ㅣ d3ㄱlsj dㄹ⊙ㄱdbstJㄱlz 'Next'.
5, ⌋ r в¸ jtaㄱlsj "Display a list of all the drivers in a specific location, so you can select the driver you want.", dㄹ⊙ㅣ d3ㄱlsj ㄱdbstJㄱlz 'Next', L⊙lsj d3dㄹ⊙ㅣ d3ㄱlsj dㄹ⊙ㄱdbstJㄱlz 'Have Disk...'.
6, ¸ ⊙ㅣ d3ㄱlsj ㄱdbstJㄱlz 'Browse...', ə r в¸ jtaㄱlsj вlㄱəlz dㄹ⊙ㄱtstJㄱlsj dz w, frjstslsə¸ jlsfrjsəlz s h lz s lzfrjstdts?frjsəlz ㄱusj dㄹ w ㄱtsdJJ⊙ㄱls-H ㄱdfrㄱtsə (CD-ROM), ㄱ dㄹ⊙ㅣ d3ㄱlsj ㄱdbstJㄱlz 'OK'.
7, ¸ ⊙ㅣ d3ㄱlsj ㄱdbstJㄱlz 'OK', ə r в¸ jtaㄱlsj d3s-H¸ jdz frjtsj dts d3sdㄹlststc⊙, dㄹ⊙ㅣ d3ㄱlsj ㄱdbstJㄱlz 'Next', L⊙lsj d3dㄹ⊙ㅣ d3ㄱlsj ㄱdbstJㄱlz 'ㄱ ⊙dzj¸ j'.
/ ., ¸ ⊙ㅣ d3ㄱlsj ㄱdbstJㄱlz 'Finish', L⊙lsj d3dㄹ⊙ㅣ d3ㄱlsj ㄱdbstJㄱlz 'Close'.

WindowsÈ 2000

/, ¸ ⊙JJlzfrjsㄱlsj WindowsÈ 2000
0, ¸ ⊙ㅣ d3ㄱlsj ㄱdbstJㄱlz '¸ lzfrㄱ', ə r в¸ jtaㄱlsj '¸ ⊙frjstdts?ㄱ⊙, '¸ ⊙dzj dz lzJta⊙ə dzj dzㄱw'.
1, ㄱ ə⊙ㅣ H r h ¸ jd£dbㄱlsj tJts L dㄹ⊙uㄱlz 'ㄱ ㄱta⊙dz.
2, ⌋ r в¸ jtaㄱlsj əㄱdㄹ⊙Hㄱlz '¸ ⊙ta⊙dz¸ jlstc ' ㄱ dㄹ⊙ㅣ d3ㄱlsj ㄱdbstJㄱlz 'ㄱ tsJtsdzdㄹlsj dz dbs'..
3, ⌋ r в¸ jtaㄱlsj '[tsdㄹlststc
- [frjdz ㄱdbstJㄱ⊙ 'ㅂ ə ts?frjsə⊙ dzj H tsfrjslzJ dㄹ⊙, lsts d3sdㄹlststc frㄱtsdㄹ ㄱ dzta ㄱtdtsə⊙ dzJta⊙ə ㄱdz dbs. ¸ ¸ tJtdts-H tsdㄹ⊙?lsj lzfrjs⊙dbsə ㄱlz.
- [frjdz ㄱdbstJㄱ⊙ 'ㅂ ə ts?frjsə⊙ H tsfrjslzJ dㄹ⊙, lsts dㄹ⊙ㅣ d3ㄱlsj dㄹ⊙dzj¸ j. ⌋ r tJtsdzdㄹlsj frjdzj H lz s h ㄱ¸ j H¸ j?frjsə ㄱw.
4, ⌋ r в¸ jtaㄱlsj '[ta⊙?ə¸ jtc', dㄹ⊙ㅣ d3ㄱlsj ㄱdbstJㄱlz '[в dbsə ㄱlsj H ta⊙?ə¸ jtc', L⊙lsj d3dㄹ⊙ㅣ d3ㄱlsj ㄱdbstJㄱlz '[⊙dzj¸ j'.
5, ⌋ r в¸ jtaㄱlsj "[lstsв ta⊙ㄱlsj frJㄱfrjㄱ-ə frj¸ ㄱ H ta⊙?ə¸ jtdtsə, ¸ usts в r ə r d3sdz[ə r в ta⊙lsj dㄹ⊙ㄱ в tsdz¸ j tJts-H ㄱtsH wh ㄱ? ㄱL dz ㄱ.", dㄹ⊙ㅣ d3ㄱlsj ㄱdbstJㄱlz '[⊙dzj¸ j', L⊙lsj d3dㄹ⊙ㅣ d3ㄱlsj dㄹ⊙ㄱdbstJㄱlz 'u frjs⊙dbsə ㄱlsj frjH ㄱfrㄱ⊙.
6, ¸ ⊙ㅣ d3ㄱlsj ㄱdbstJㄱlz '[в L tstc...', ə r в¸ jtaㄱlsj вlㄱəlz dㄹ⊙ㄱtstJㄱlsj dz w, frjstslsə¸ jlsfrjsəlz s h lz s lzfrjstdts?frjsəlz ㄱusj dㄹ w ㄱtsdJJ⊙ㄱls-H ㄱdfrㄱtsə (CD-ROM).
7, ¸ ⊙ㅣ d3ㄱlsj ㄱdbstJㄱlz '[lsㄱtc lsj ', L⊙lsj d3dㄹ⊙ㅣ d3ㄱlsj ㄱdbstJㄱlz 'OK'.
/ ., ⌋ r в¸ jtaㄱlsj d3s-H¸ jdz frjtsj dts d3sdㄹlststc⊙, dㄹ⊙ㅣ d3ㄱlsj ㄱdbstJㄱlz '[⊙dzj¸ j', L⊙lsj d3dㄹ⊙ㅣ d3ㄱlsj ㄱdbstJㄱlz '[⊙dzj¸ j'..
//, ¸ ⊙ㅣ d3ㄱlsj ㄱdbstJㄱlz '¸ tslstsə ts', L⊙lsj d3dㄹ⊙ㅣ d3ㄱlsj ㄱdbstJㄱlz '¸ ⊙ㄱtc lsj '.
[frjdz ㄱdㄹ⊙ㄱ ㄱta⊙dzj tJts w ə ㄱdbsfrj ts ㄱdbs "Λ ㄱ w w tdtsə⊙ w tJts-H tJㄱfrj dzj dㄹ⊙?H¸ jdㄹ⊙', dㄹ⊙ㅣ d3ㄱlsj ㄱdbstJㄱlz '[⊙.

WindowsÈ XP

/, ¸ ⊙JJlzfrjsㄱlsj WindowsÈ XP
0, z ¸ jd£dbㄱlsj dㄹ⊙ㄱdbstJㄱ¸ j 'Start', ⊙L⊙lsj d3dㄹ⊙'Control Panel'
1, z ¸ jd£dbㄱlsj dㄹ⊙ㄱ⊙lsj dstaㄱ⊙ㄱ 'Printers and Other Hardware'
2, z ¸ jd£dbㄱlsj dㄹ⊙tJlzdㄹ⊙lsj 'Display' .
3, ⌋ r в¸ jtaㄱlsj əㄱdㄹ⊙Hㄱlz 'Settings', ⊙L⊙lsj d3 h ¸ jd£dbㄱlsj dㄹ⊙ㄱdbstJㄱ¸ j 'Advanced'.
4, ⌋ r в¸ jtaㄱlsj əㄱdㄹ⊙Hㄱlz 'Monitor'
- [frjdz ㄱdbstJㄱ⊙ 'Properties' w ə dz w ¸ jlsfrj w dzj⊙ㄱ⊙ㄱls ㄱ ə dbs?, ㄱ lsts tsL dㄹ⊙u⊙¸ j ls, ¸ usts ə⊙ h d3sdㄹlststc frㄱtsdㄹ ㄱ dzta ㄱtdtsə⊙ dzJta⊙ə ㄱdz dbs. ¸ ⊙ㄱtsdㄹ¸ usj lzfrjs⊙dbsə ㄱlz.
- [frjdz ㄱdbstJㄱ⊙ 'Properties' w ə dz w ¸ jlsfrj w ⊙ㄱlsㄱ ə dbs?, h ¸ jd£dbㄱlsj dㄹ⊙ㄱdbstJㄱ¸ j 'Properties'.
⌋ r tJtsdzdㄹlsj tsJJㄱfrj⊙dzdz ¸ j dzㄱ¸ j h ⊙dㄱ.
5, z ¸ jd£dbㄱlsj dㄹ⊙ㄱdㄹ⊙Hㄱ¸ j 'Driver', ⊙L⊙lsj d3 h ¸ jd£dbㄱlsj dㄹ⊙ㄱdbstJㄱ¸ j 'Update Driver...'.
6, ⌋ r в¸ jtaㄱlsj ㄱdbstJㄱlz frj L⊙ㄱfrjㄱd3s? w w ㄱ ㄱ?frj⊙u ㄱ¸ j? 'Install from a list or specific location [advanced]', ⊙L⊙lsj d3 h ¸ jd£dbㄱlsj dㄹ⊙ㄱdbstJㄱ¸ j 'Next'.
7, ⌋ r в¸ jtaㄱlsj ㄱdbstJㄱlz frj L⊙ㄱfrjㄱd3s? w w ㄱ ㄱ?frj⊙u ㄱ¸ j? ' Don't Search. I will choose the driver to

install'. ┐ Ȯlsȷ dʒʰ ȷ dȣ dȥ[lsȷ dȤ Ȯ dȤsʃȮȷ 'Next'.

/ ., ȥ ȷ dȣ dȥ[lsȷ dȤ Ȯ dȤsʃȮȷ 'Have disk...', ȮʟȮlsȷ dʒʰ ȷ dȣ dȥ[lsȷ dȤ Ȯ dȤsʃȮȷ 'Browse...'. ┐ Ȯlsȷ dʒ ʊʳ ʁȷ tɑ[lsȷ dȥ┤ dȥ ʔ ʜ[fŋȮtsʊtsʜ, dȤʃtɑ[dʒȷ tɑ, F: (ʜ[fŋȮtsʊtsʜ CD-ROM).

/ /, ȥ ȷ dȣ dȥ[lsȷ dȤ Ȯ dȤsʃȮȷ 'Open', ȮʟȮlsȷ dʒʰ ȷ dȣ dȥ[lsȷ dȤ Ȯ dȤsʃȮȷ 'OK'.

/0, ȷʳ ʁȷ tɑ[lsȷ dʒʊʜȷ dȥ ʊȮʰ ȷ dʊ dʒʊ dȥ[lsʊtɑȮ, ȮʟȮlsȷ dʒʰ ȷ dȣ dȥ[lsȷ dȤ Ȯ dȤsʃȮȷ 'Next'.
- [fŋbȥ[ʊʳ lzɔ[ʜ[lsȷ fŋʊtsʁʰ ȷ dȥ[ȷ 'has not passed WindowsÈ Logo testing to verify its compatibility with WindowsÈ XP' ('dȥ tʃtɑtsʰ dȤ tʃtɑtsɔȷ tɑȮ dȤ fŋsɔdʒȷ fŋsɔ[dʒʊfŋsʰ dȥsɑtsɔ[tʃȮ WindowsÈ fŋWindowsÈ XP'), ʰ ȷ dȣ dȥ[lsȷ dȤ Ȯ dȤsʃȮȷ 'Continue Anyway'.

/1, ȥ ȷ dȣ dȥ[lsȷ dȤ Ȯ dȤsʃȮȷ 'Finish', ȮʟȮlsȷ dʒ dȤ Ȯ dȤsʃȮȷ 'Close'.

/2, ȥ ȷ dȣ dȥ[lsȷ dȤ Ȯ dȤsʃȮȷ 'OK', ȮʟȮlsȷ dʒȷʰ ȷ tɑȮ dȤ Ȯ dȤsʃȮȷ 'OK' ʜ dȥʷ lsʊtsɑ, ʅ[ʊtsʁʳ ʟȮȮtɑʳ lsʊ ʜ[Ȯdȥsɑtsʊtsȷ tsȮdȤs Display_Properties.

[fŋbȥ[ʊʳ tʃtsdȥ ʟlzȷ lsȷ fŋ ʜtɑzɑtsʔ ʊȷ tɑfŋ[ȷ ʔ WindowsÈ 95/98/2000/Me/XP, ɑ[dȥ[ʊȮdʒlstɑȷ ʁlzʷ lsfŋʷ ʁtsdȥȷ tʃtsʜtɑtsʁ dȥ ȷ lzȮȮ dȥ[ʷ, tsʁtɑȮlsɑ[lsȷ fŋ, tʃtsʅȮdȥʔ fŋsȮ, ȮtɑzȮtsʊtsʜfŋsʊlz tʃtsdȥ ʟtsʊȮlsȷ dȥʷ WindowsÈ 95/98/2000/Me/XP.

¿Otc⊙dbsd[w Philips F1rst Choice

J dz⊙dtsH⊙tcd[dz⊥⊙tJtsΦlzJΦlz dzsdz[lststc⊙Philips.

J fnj dzsdz[lststc Philips fnJtdsj⊙lsd[tdsc⊙dz d[d⊥dtslstsc⊙dzj dz ⊙ fnjstslsc⊙j lsfnjsc⊙d[d fn ⊙r fnjs⊙d[dz[fnjs⊙dz⊙tdsc⊙dz[d[tslsdz[u⊙x lsfnw ⊙r fnjs⊙ts⊙⊙uj fnjsc⊙j dz[dz dz[⊙⊙tc⊙⊙lsj tcd[fnjsd[⊙⊙dz[, tJtdsfnjstslsts? d[fnJtsdz⊥tsc⊙dz[w d[lzfnjs⊙dzsc⊙d[. ⊥ tcd[tJtsw⊙dzj dz[d[⊙⊙d[-dz[⊥tslstdz⊥dzsfnjsj? ⊙ts⊙tcj dz[w lzfnjs⊙dzsc⊙d[d[dz[d[fnJtsdz⊥tsc⊙dz[w ⊥lstsdts d[⊥H j dz[w tsc⊙tc⊙h ⊙?lsj fnj dzJtJtsfnjcj⊥Hfnjsc⊙j dzdzsc⊙ fnpdz>⊥⊥lz lsj⊥dz[uj fn⊙ts? tJtsH⊥j tc>⊙d[Philips, d[⊥⊙dzj⊙w tJtsdz⊥lz d[⊥ ⊙⊙tc⊙dzsd[d Philips F1rst Choice. ⊙ lsO lstcj⊥⊙tsH d[upd⊙w ⊙⊙tc⊙dzsd[w tJtcj⊥HtsfnjsO⊙dzw j lsc⊙dz⊥tJtc⊙⊙ts⊥⊙dzj dz[lsw dzsH j dz ⊙ dzj fnjsj d[fnJtsdz⊥tsc⊙dz[w, j fnpdz[dzsdz[lststc ts⊙⊙⊥r ⊙j lsfnw dzj d[fnJtc⊙⊙dz dz d[dz[H j w j ⊙lsdz dz- ⊙tsdzJ⊙dz[w Philips tJtsfnjsO⊙c⊙j lsfnw ⊥⊙dzj dz[lsw dzsdz[lststc ⊙ lsj uj dz[j 48 u⊙fnjsc⊙ tJtsfnpzj tJtsdzzuj dz[w ⊥⊙Jtdsfn⊙.

Y lststJtsHtJ⊙H⊙j lstJtsH ⊙⊙tc⊙dbsd[⊥ ?

¿⊙tc⊙dbsd[w Philips F1rst Choice tc⊙fnJtdsfnjstc⊙dzw j lsfnw dz⊙ϕ dzwtstcdz, ϕ ⊙fnjstcd[⊥, J j dz ⊙d[⊥, ⊙s d[tJtc, r ⊙dz[⊥, ∧ tc⊙dzupd[⊥, ¿j tcdz⊙dz[⊥, ¿tcj upd[⊥, ∧ d[dzdzwdzwd[⊥, R tcdz⊙dzwd[⊥, R ls⊙dz[⊥, ∫ d[⊥lsj dz lsj?dz ∫⊥ ⊙fnj dz⊥tc; ∫ tsdz⊙⊙ts, ⊥ d[H j tcdz⊙dzwr, ⊥ tstc⊙j d[⊥, ⊥ tstdstzc⊙dz[⊥, z ⊙j upd[⊥, z ⊙j?upc⊙d[⊥, R fnJ⊙dz[⊥ d[J j dz[⊙tsc tcd[ls⊙dz[⊥ d[lstsdz⊙ts dz⊙dzsdz[lststc, fnJtdsj⊙lsd[tdsc⊙dzdz j, d[⊥dtslstsc⊙dzj dzdz j d[/d[dz[tJtcj Hdz⊙dz⊙uj dzdz j Hdzw d[fnJtsdz⊥tsc⊙dz[w ⊙ ¿lsd[⊥ fnjstc⊙dz⊙⊥.

r j?fnjsc⊙d[j ⊙⊙tc⊙dbsd[d dz⊙ud[dz⊙j lsfnw fnjs Hdzw tJtsΦlzJΦd[dzsdz[lststc⊙. *J ls j uj dz[j tJtsfnpzj H⊥zx h d[⊥ ls tcj ⊥ dzj ls ⊙ fnpdz⊥u⊙j tsc dz⊙dz>j dz[w H j w j ⊙lstsc⊙, tJtsHtJ⊙H⊙x h d[⊥ tJtsH lzfnpdzsc⊙d[w ⊙⊙tc⊙dbsd[d, ⊙⊙h dzsdz[lststc B⊥zH j ls tsc dzj dzj dz dz⊙ dzsdz[lststc fnjls⊙⊙d[dz[>j d[dz[lzdzzu⊥ j dzdz dz[⊙⊙tc⊙⊙lsj tcd[fnjsd[⊙⊙dz[.*

∫ tsdz[lststc, tJtcj Htsfnjs⊙⊙dzj dzdz?⊙ ⊙⊥⊙dzj dz tsfnjs⊙j lsfnw ⊙⊙h d[dz ⊙tsdzJ⊙dz[w Philips ⊥⊙c d[tc⊙j lsdzj d[fnJtc⊙⊙dz?/ d[fn⊥tsH dz?⊙ dzsdz[lststc. H tdsΦ H j?fnjsc⊙d[w ⊙⊙tc⊙dbsd[d dz⊙dzsdz[lststc, tJtcj Htsfnjs⊙⊙dzj dzdz?⊙ ⊙⊥⊙dzj dz tsfnjs⊙j lsfnw tc⊙⊙dz dz fnjdtsΦlz H j?fnjsc⊙d[w ⊙⊙tc⊙dbsd[d dz⊙d[fn⊥tsH dz?⊙ dzsdz[lststc. 36 dzj fnw u j ⊙, dz⊙ud[dz⊙w fnjs Hdzw tJtsΦlzJΦd[d[fn⊥tsH dbsdts dzsdz[lststc⊙.

Y lstsd[fnΦdzz uj dbs?

¿⊙tc⊙dbsd[w Philips F1rst Choice tJtcd[dzj dzwj lsfnw tJtcd[lzfnpdzsc⊙d[d fnjsc dzz H j dz[w uj dzj?⊙ d[fnJtsdz⊥tsc⊙dz[w d[⊥H j dz[w, d[fnJtsdz⊥tsc⊙dz[w ⊙ fnjstslsc⊙j lsfnjsc⊙d[d fn d[dzdzsdzΦ uud[w dzd[tJtts⊥ΦfnJtdzΦ⊙s⊙ud[d d[tJtcd[dz⊙dz[u⊙d[tJtsH dz[dzdzΦ⊙fnuj ls⊙d[dz[uj Φ⊙, ⊙ Φtslststc ⊥ lzΦ⊙⊥⊙dz H⊙ls⊙tJtsΦlzJΦd[, tJtcdsH⊙j u, dzsH j dz d[dbsdzj tc d[⊥H j dz[w.

¿⊙tc⊙dbsd[w Philips F1rst Choice dzs>j ls dzj tc⊙fnJtdsfnjstc⊙dzwls fnw dz⊙fnpdzj H⊥zx h d[j fnpdzu⊙d[:

- r tsΦlzdzj dbs Φ⊙Φd[dz-dz[⊥tsB tsB tc⊙⊥tsdz d[⊥dzj dzj dz d[dz[dzj tc⊙⊥B tstcud[⊙r.
- J tsH j dz d[dz[dbsdzj tc d[⊥H j dz[w d[⊥dzj dzj dz, lzH⊙dzj dz, fnjsj tdsΦ d[dz[dzj tc⊙⊥B tstcud[⊙r.
- t j dzsdbs, dzsH d[w d[Φ⊙ud[w d[dz[d[⊥dzj dzj dz[j d[⊥H j dz[w tJtdsd[⊥⊙j H j dz dzj lzJtsdzdbsdzsuj dzdz dz[d[⊙ lstsfnj tc⊙d[fnpdz dz[tstc⊙dz[⊥⊙ud[w dz[d[dz[dz[u⊙dz[.
- ⊥ tsc tcj >H j dz[j ⊙tsΦdz[Φdts tJtsJtc d[ud[dzj ⊙⊙tc⊙d[, ⊙Φdz u⊙w, dbs dzj tstc⊙dz[ud[⊙⊙wfnj, dzsdzdz[j?, ⊙tsH ts? d[dz[tsdzj dz dzj tJtc⊙⊙d[dz dz dz d[fnJtsdz⊥tsc⊙dz[j dz d[dz[dzj B tcj >dbsfnjsx.
- ⊥ tdsB dzj dz tJtcd[j dz⊙tsB lzfnpdzsc⊙dzj dz Φ⊙ujfnjsc⊙tsdz fnjd⊙dz⊙d[dz[⊙dzj h dz[dz[Φ⊙B j dz dz dz[d[dz[

Ȯdžsjdždž dȝ[fnȷ[fnȷsjdȝȮdȝ[.

- ȷ jw jȘls ǝtsLdžȘdž[tȷts tȷtaȮ[ȷ[dȝj dȝtȷtaȮǝ[dz džs? ɨȘfnȷdžzȮlsȮȷ[d[d[dž[d[fnȷtsdzLtsǝȮdž[w dȝtsdž[lststaȮ.
- ȷ jtsǝ˝tsHd[dȝs dLdȝj dȝdž[j d[dž[tȷjtaȷHjdž£Ȯd[LHjdž[w ǝ fnȷstslsǝjlsfnȷsǝd[d[fnȷdȝjfnȷsdž dȝ[d[dž[taȷd[tsdž£dz dž dȝ[lsȷ˝dž[ȷjfnȘd[dȝ[fnȷsȮdžaȮtdsȮdȝ[, tȷtaȮ[dȝjdžwɩ ʰ d[dȝ[fnȷ ǝ fnȷstaȮdž£˝, Hdžw Ștslststa˝ ˝ dȝtsdž[lststa fnȷjȷ[d[Ȯdz džs dȝj fnȷtatsjȘls[tatsǝȮdz dȝj tȷtatsd[LǝjHjdz dȝj tsHtsǝtaȷjdž[/d[dž[dȝj tȷtaȷHdž£Ldž£ȷjdz1 tsɩ lstsdȝz ǝfnȷjdHȮtȷtatsǝjtaw?lsȷ, dȝs>ldžs dž[d[fnȷtsdzLtsǝȮls dȝtsdž[lststaǝ ȘȮ>lHts? Ștsdž£taȷlsdžs? fnȷstaȮdȝj.
- ȷ BtaȮlsd[lsȷ ǝdž[dȝȮdž[ȷj, ȷ[stsdž£d[LHjdž[w, dȝj fnȷtatsjȘls[tatsǝȮdžzȷj, dȝj tȷtatsd[LǝjHjdžzȷj, dȝj tsHtsǝtaȷjdžzȷj d[/d[dž[dȝj tȷtaȷHdž£Ldž£ȷjdžzȷj Hdžw d[fnȷtsdzLtsǝȮdž[w ǝ fnȷstaȮdž£˝ Philips F1rst Choice, aȮtaȮdžsd[w Philips F1rst Choice dȝj taȮfnȷtatsfnȷstaȮdžwȷjlsfnȷw. ȷ ɨlsd[˝ fnȷdžzȮw˝ tȷtad[dȝjdžwɩ lsfnȷw lzfnȷdžsǝd[w ǝfnȷjdȝ[tadžs? aȮtaȮdžsd[d[Ștsdžȷ[Ȯdž[d[Philips.

1 tatsfnȷstsʰ ȷjdž£dž[lsȷ

ȷ fnȷdžzȮȷj ȘȮȘd˝-dž[BtstȷtatsBdžjdȝ fnȷsǝȷlszjdȝȷ Ȯdȝǝdž[dȝȮlsȷjdz džs tȷtatsȮ[lsȮls d[dž£ȷstdzȘȮȮd[ɩ tȷts ɨȘfnȷdžzȮlsȮȮd[d[d[dž[tȷtsfnȷlsd[ls ǝȷB-fnȮ?lswww.philips.com/support Hdžw tȷtsdžzȮȷjdž[w Htstȷtsdždž[lsȷjdz džs? tȷtsHHȷtaɩȘd[.

1 tatsfnȷststȷtsLǝtsdž[lsȷ

ȷ džw lstsdts ȮȷstsBr d[LBȷjɩȮls dȝɩȷjdž£lsȷjdz dž ˝ dȝlzHtsBfnȷsǝ, fnȷsǝȷlszjdȝȷ Ȯdȝtȷjtaȷ H tsBtaȮn ȷjdž[ȷjdȝǝ "fnȷtaȮǝtsȮȮdž ? fnȷstsdz Ștsdžȷ[Ȯdž[d[Philips ǝdž[dȝȮlsȷjdz džs tȷtatsȮ[lsȮls d[dž£ȷstdzȘȮȮd[ɩ tȷts ɨȘfnȷdžzȮlsȮȮd[d[d[dž[tȷtsfnȷlsd[ls ǝȷB-fnȮ?lswww.philips.com/support.

ȷ džw lstsdts Ȯȷstsbr Br fnȷstdts taȮ.taȷh d[ls tȷtatsBdžjdȝz, tȷjtaȷH tsBtaȮn ȷjdž[ȷjdȝȘ "fnȷtaȮǝtsȮȮdžsdȝz fnȷstsdz" Ștsdžȷ[Ȯdž[d[Philips tȷtsHdtslstsǝ˩ lsȷ fnȷdȝjHlzɩ ʰ d[ȷ fnȷjHjdž[w:

- ȷ tsdȝjtalsd[tȷȮPhilips
- ʉjtad?dž ? džsdȝjtaPhilips
- ȷ ȮlsȮtȷtsȘlzȷtȷȘd (dȝs>ȷjlstȷtslstaȷBtsǝȮls fnȷw Ștstȷd[w tȷdžȮlsȷj>dž ˝ HtsȘlzdȝjdžstsǝ)
- ʉtaȷHȮȘtsdȝȷ˩ɩ lsȷtaȮ, tȷtatsȮȷfnȷfnȷstaȮ
  - 286/386/486/Pentium Pro/ȷ tȷjtaȮlsd[ǝdž£w tȷȮdȝwls
  - ȷ tȷjtaȮȮȮd[tsdž£w fnȷ[fnȷsjdȝȮ(Windows, DOS, OS/2, MAC)
  - ʌ ȮȘfnȷ/ȷ tsHȷjdȝR džsȷtadȝjls-BtatslzȷjtaȮ?
- ȷ tazad[ȷj lzfnȷsȮdžsǝdȝjdž[ȷj ȘȮtadsw

ȷ Ȯdžz[ȮȮd[ȷj fnȷdȝjHlzɩ ʰ d[˝ fnȷjHjdž[? lsȮȘ>ȷj tȷtsdȝȷs>ȷjlslzfnȘtstad[ls tȷtatsȮȷjfnȷfnȷ

- 1 tsHlsǝȷjtaȮ>HjdžȮȷj tȷtsȘlzȷtȷȘd, ǝ Ștslststatsdȝlz£ȘLȮdz : HȮlsȮtȷtsȘlzȷtȷȘd, tȷtatsHȮǝȷjȮȮ, dȝs>HȷjdžȮ d[fnȷjtad?dž ? džsdȝjtaȮd[LHjdž[w.
- 1 tsdždz ? ȮHtaȷjfnȷ tȷtsȘtslststatsdȝjzdȝjtsB˝tsHd[dȝsLȮBtaȮls dȝd[fnȷtaȮǝdž ? dȝsdž[lststaȮ d[dž£ȘtslststaȮ ? dȝjtsB˝tsHd[dȝs tȷtsfnȷsȮǝd[ls džsǝr ?.

"ʉtȷtaȮǝtsȮdž ȷ fnȷstsdž " tȷtsȘlzȷtȷȮlsȷjdȝ? tȷtatsHlzȘȮȮd[d[Ștsdžȷ[Ȯdž[d[Philips taȮfnȷtsdžs>ȷjdž tȷtsǝfnȷjdȝz dȝ[tadz z ȷjdž£dž[lsȷ fnȷfnȷ dž£lz Hdžw Htsfnȷstzȷ[ȮȘ ȘtsdžsȮȘlsdžs? d[dž tstadȝȮȮd[d[F1rst Choice.

Ș dž£dȝlsȮȘ>ȷj dȝs>ldžs tsBtaȮlsd[ls fnȷw ȮȷjtaȷL:

ȷ ȷB-fnȮ?ls http://www.philips.com/support

[illegible] Philips [illegible]

[illegible]

[illegible] Philips, [illegible] [illegible] [illegible]

ฉ ๑ ๑ ๑

[illegible]

[illegible]

[illegible] Philips, [illegible]

[illegible] Philips [illegible] 12 [illegible] Philips [illegible] Philips [illegible]

[illegible] Philips [illegible]

[illegible] Philips [illegible]

[illegible] Philips [illegible]

[illegible] Philips [illegible]

[illegible] Philips [illegible]

[illegible] Philips [illegible]

[illegible] Philips [illegible]

[illegible]

http://www.philips.com

LIMITED WARRANTY (Computer Monitor)

Three Years Free Labor/Three Years Free Service on Parts

**This product must be shipped in at your expense for service.*

WHO IS COVERED?

You must have proof of purchase to receive warranty service. A sales receipt or other document showing that you purchased the product is considered proof of purchase. Attach it to this owner's manual and keep both nearby.

WHAT IS COVERED?

Warranty coverage begins the day you buy your product. *For three years thereafter,* all parts will be repaired or replaced, and labor is free. *After three years from the day of purchase,* you pay for the replacement or repair of all parts, and for all labor charges.

All parts, including repaired and replaced parts, are covered only for the original warranty period. When the warranty on the original product expires, the warranty on all replaced and repaired products and parts also expires.

WHAT IS EXCLUDED?

Your warranty does not cover:

- labor charges for installation or setup of the product, adjustment of customer controls on the product, and installation or repair of antenna systems outside of the product.
- product repair and/or part replacement because of misuse, accident, unauthorized repair or other cause not within the control of Philips Consumer Electronics.
- reception problems caused by signal conditions or cable or antenna systems outside the unit.
- a product that requires modification or adaptation to enable it to operate in any country other than the country for which it was designed, manufactured, approved and/or authorized, or repair of products damaged by these modifications.
- incidental or consequential damages resulting from the product. (Some states do not allow the exclusion of incidental or consequential damages, so the above exclusion may not apply to you. This includes, but is not limited to, prerecorded material, whether copyrighted or not copyrighted.)
- the model or production number on the product has been altered, deleted, removed or made illegible.

Where IS SERVICE AVAILABLE?

Warranty service is available in all countries where the product is officially distributed by Philips Consumer Electronics. In countries where Philips Consumer Electronics does not distribute the

product, the local Philips service organization will attempt to provide service (although there may be a delay if the appropriate spare parts and technical manual(s) are not readily available).

Where CAN I GET MORE INFORMATION?

For more information, contact the Philips Customer Care Center by calling (877) 835-1838 (U.S.A. customers only) or *(919) 573-7855*.

Before Requesting Service...

Please check your owner's manual before requesting service. Adjustments of the controls discussed there may save you a service call.

TO GET WARRANTY SERVICE IN U.S.A., PUERTO RICO OR U.S. VIRGIN ISLANDS...

Contact the Philips Customer Care Center phone number listed below for product assistance and procedures for servicing:

Philips Customer Care Center

(877) 835-1838 or (919) 573-7855

(In U.S.A., Puerto Rico and U.S. Virgin Islands, all implied warranties, including implied warranties of merchantability and fitness for a particular purpose, are limited in duration to the duration of this express warranty. But, because some states do not allow limitations on how long an implied warranty may last, this limitation may not apply to you.)

REMEMBER... Please record the model and serial numbers found on the product below.

MODEL # _____

SERIAL # _____

This warranty gives you specific legal rights. You may have other rights which vary from state/province to state/province.

Before contacting Philips, please prepare the following details so we can solve your problem quickly.

- Philips type number
- Philips serial number
- Purchase date (copy of purchase may be required)
- PC environment Processor:
    - 286/386/486/Pentium Pro/Internal memory
    - Operating system (Windows, DOS, OS/2, Apple Macintosh)

- Fax/Modem/Internet program?

- Other cards installed
  Having the following information available will also help speed up the process:
- Your proof of purchase indicating: date of purchase, dealer name, model and product serial number.
- The full address to which the swap model should be delivered.

Just a phone call away

Philips' customer help desks are located worldwide. Within the U.S. you can contact Philips customer care Monday-Friday from 8:00 AM-9:00 PM Eastern Time (ET) and on Saturdays from 10:00 AM-5:00 PM ET hrs by using one of the contact phone numbers.

For more information on this and more great Philips products visit our website at:

Website: *http://www.philips.com*

ętsdłsOłlsdłs? q[dłł tstadłOuq[q[F1rst Choice

ułstaOdłł	ę tsdłjtcłsłjdłjłł tsdłł	ćOtaq[ł
Austria	0820 901115	ú 0.20
Belgium	070 253 010	ú 0.17
Cyprus	800 92256	ł ęjfrłłdłOłsdłłs
Denmark	3525 8761	ćOtaq[ł dłjłfrłłsdłł ą ęr łtsętsę
Finland	09 2290 1908	ćOtaq[ł dłjłfrłłsdłł ą ęr łtsętsę
France	08 9165 0006	ú 0.23
Germany	0180 5 007 532	ú 0.12
Greece	00800 3122 1223	ćOtaq[ł dłjłfrłłsdłł ą ęr łtsętsę
Ireland	01 601 1161	ćOtaq[ł dłjłfrłłsdłł ą ęr łtsętsę
Italy	199 404 042	ú 0.25
Luxembourg	26 84 30 00	ćOtaq[ł dłjłfrłłsdłł ą ęr łtsętsę
The Netherlands	0900 0400 063	ú 0.20
Norway	2270 8250	ćOtaq[ł dłjłfrłłsdłł ą ęr łtsętsę
Portugal	2 1359 1440	ćOtaq[ł dłjłfrłłsdłł ą ęr łtsętsę
Spain	902 888 785	ú 0.15
Sweden	08 632 0016	ćOtaq[ł dłjłfrłłsdłł ą ęr łtsętsę
Switzerland	02 2310 2116	ćOtaq[ł dłjłfrłłsdłł ą ęr łtsętsę
United Kingdom	0207 949 0069	ćOtaq[ł dłjłfrłłsdłł ą ęr łtsętsę

Consumer Information Centers

Antilles • Argentina • Australia • Bangladesh • Brasil • Canada • Chile • China • Colombia • Belarus • Bulgaria • Croatia • Czech Republic • Estonia • Dubai • Hong Kong • Hungary • India • Indonesia • Korea • Latvia • Lithuania • Malaysia • Mexico • Morocco • New Zealand • Pakistan • Paraguay • Peru • Philippines • Poland • Romania • Russia • Serbia & Montenegro • Singapore • Slovakia • Slovenia • South Africa • Taiwan • Thailand • Turkey • Ukraine • Uruguay • Venezuela

Eastern Europe

BELARUS

Technical Center of JV IBA
M. Bogdanovich str. 155
BY - 220040 Minsk
Tel: +375 17 217 33 86

BULGARIA

LAN Service
140, Mimi Balkanska Str.
Office center Translog
1540 Sofia, Bulgaria
Tel: +359 2 960 2360
www.lan-service.bg

CZECH REPUBLIC

Xpectrum
Lužn§ 591/4
CZ - 160 00 Praha 6 Tel: 800 100 697
Email:info@xpectrum.cz
www.xpectrum.cz

CROATIA

Renoprom d.o.o.
Mlinska 5, Strmec
HR - 41430 Samobor
Tel: +385 1 333 0974

ESTONIA

FUJITSU SERVICES OU
Akadeemia tee 21G
EE-12618 Tallinn
Tel: +372 6519900
www.ee.invia.fujitsu.com

HUNGARY

Serware Szerviz
Vizimoln§r u. 2-4
HU - 1031 Budapest
Tel: +36 1 2426331
Email: inbox@serware.hu
www.serware.hu

LATVIA

ServiceNet LV
Jelgavas iela 36
LV - 1055 Riga,
Tel: +371 7460399
Email: serviss@servicenet.lv

LITHUANIA

ServiceNet LT
Gaiziunu G. 3
LT - 3009 KAUNAS
Tel: +370 7400088
Email: servisas@servicenet.lt
www.servicenet.lt

ROMANIA

Blue Ridge Int'l Computers SRL
115, Mihai Eminescu St., Sector 2
RO - 020074 Bucharest
Tel: +40 21 2101969

SERBIA & MONTENEGRO

Tehnicom Service d.o.o.
Bulevar Vojvode Misica 37B
YU - 11000 Belgrade
Tel: +381 11 3060 886

SLOVAKIA

Datalan Servisne Stredisko
Puchovska 8
SK - 831 06 Bratislava
Tel: +421 2 49207155
Email: servis@datalan.sk

SLOVENIA

PC HAND
Brezovce 10
SI - 1236 Trzin
Tel: +386 1 530 08 24
Email: servis@pchand.si

POLAND

Zolter
ul.Zytnia 1
PL - 05-500 Piaseczno
Tel: +48 22 7501766
Email: servmonitor@zolter.com.pl
www.zolter.com.pl

RUSSIA

Tel: +7 095 961-1111
Tel: 8-800-200-0880
Website: www.philips.ru

TURKEY

T¿rk Philips Ticaret A.S.
Yukari Dudullu Org.San.Bolgesi
2.Cadde No:22
34776-Umraniye/Istanbul
Tel: (0800)-261 33 02

UKRAINE

Comel
Shevchenko street 32
UA - 49030 Dnepropetrovsk
Tel: +380 562320045
www.csp-comel.com

Latin America

ANTILLES

Philips Antillana N.V.
Kaminda A.J.E. Kusters 4
Zeelandia, P.O. box 3523-3051
Willemstad, Curacao
Phone: (09)-4612799
Fax : (09)-4612772

ARGENTINA

Philips Antillana N.V.
Vedia 3892 Capital Federal
CP: 1430 Buenos Aires
Phone/Fax: (011)-4544 2047

BRASIL

Philips da Amaz¹ nia Ind. Elet. Ltda.
Rua Verbo Divino, 1400-S«o Paulo-SP
CEP-04719-002
Phones: 11 21210203 -S«o Paulo & 0800-701-0203-Other Regions without S«o Paulo City

CHILE

Philips Chilena S.A.
Avenida Santa Maria 0760
P.O. box 2687Santiago de Chile
Phone: (02)-730 2000
Fax : (02)-777 6730

COLOMBIA

Industrias Philips de Colombia
S.A.-Division de Servicio
CARRERA 15 Nr. 104-33
Bogota, Colombia
Phone:(01)-8000 111001 (toll free)
Fax : (01)-619-4300/619-4104

MEXICO

Consumer Information Centre
Norte 45 No.669
Col. Industrial Vallejo
C.P.02300, -Mexico, D.F.
Phone: (05)-3687788 / 9180050462
Fax : (05)-7284272

PARAGUAY

Av. Rca. Argentina 1780 c/Alfredo Seiferheld
P.O. Box 605
Phone: (595 21) 664 333
Fax: (595 21) 664 336
Customer Desk:
Phone: 009 800 54 1 0004

PERU

Philips Peruana S.A.
Customer Desk
Comandante Espinar 719
Casilla 1841
Limab18
Phone: (01)-2136200
Fax : (01)-2136276

URUGUAY

Rambla O'Higgins 5303 Montevideo
Uruguay
Phone: (598) 619 66 66
Fax: (598) 619 77 77
Customer Desk:
Phone: 0004054176

VENEZUELA

Industrias Venezolanas Philips S.A.
Apartado Postal 1167
Caracas 1010-A
Phone: (02) 2377575
Fax : (02) 2376420

Canada

CANADA

Philips Electronics Ltd.
281 Hillmount Road
Markham, Ontario L6C 2S3
Phone: (800) 479-6696

Pacific

AUSTRALIA

Philips Consumer Electronics
Consumer Care Center
Level 1, 65 Epping Rd
North Ryde NSW 2113
Phone: 1300 363 391
Fax : +61 2 9947 0063

NEW ZEALAND

Philips New Zealand Ltd.
Consumer Help Desk
2 Wagener Place, Mt.Albert
P.O. box 1041
Auckland
Phone: 0800 477 999 (toll free)
Fax : 0800 288 588

Asia

BANGLADESH

Philips Service Centre
100 Kazi Nazrul Islam
Avenue Kawran Bazar C/A
Dhaka-1215
Phone: (02)-812909
Fax : (02)-813062

CHINA

SHANGHAI
Rm 1007, Hongyun Building, No. 501 Wuning road,
200063 Shanghai P.R. China
Phone: 4008 800 008
Fax: 21-52710058

HONG KONG

Philips Electronics Hong Kong Limited
Consumer Service
Unit A, 10/F. Park Sun Building
103-107 Wo Yi Hop Road
Kwai Chung, N.T.
Hong Kong
Phone: (852)26199663
Fax: (852)24815847

INDIA

Phone: 91-20-712 2048 ext: 2765
Fax: 91-20-712 1558

BOMBAY
Philips India
Customer Relation Centre
Bandbox House
254-D Dr. A Besant Road, Worli
Bombay 400 025

CALCUTTA
Customer Relation Centre
7 justice Chandra Madhab Road
Calcutta 700 020

MADRAS
Customer Relation Centre
3, Haddows Road
Madras 600 006

NEW DELHI
Customer Relation Centre
68, Shivaji Marg
New Dehli 110 015

INDONESIA

Philips Group of Companies in Indonesia
Consumer Information Centre
Jl.Buncit Raya Kav. 99-100
12510 Jakarta
Phone: (021)-7940040 ext: 2100
Fax : (021)-794 7511 / 794 7539

KOREA

Philips Korea Ltd.
Philips House
C.P.O. box 3680
260-199, Itaewon-Dong.
Yongsan-Ku, Seoul 140-202
Phone: 080 600 6600 (toll free)
Fax : (02) 709 1210

MALAYSIA

After Market Solutions Sdn Bhd,
Philips Authorised Service Center,
Lot 6, Jalan 225, Section 51A,
46100 Petaling Jaya,
Selangor Darul Ehsan,
Malaysia.
Phone: (603)-7954 9691/7956 3695
Fax: (603)-7954 8504
Customer Careline: 1800-880-180

PAKISTAN

Philips Consumer Service
Mubarak manzil,
39, Garden Road, Saddar,
Karachi-74400
Tel: (9221) 2737411-16
Fax: (9221) 2721167
E-mail: care@philips.com
Website: www.philips.com.pk

PHILIPPINES

PHILIPS ELECTRONICS & LIGHTING, INC.
Consumer Electronics
48F PBCOM tower
6795 Ayala Avenue cor VA Rufino St.
Salcedo Village
1227 Makati City, PHILS
Phone: (02)-888 0572, Domestic Toll Free: 1-800-10-PHILIPS or 1-800-10-744 5477
Fax: (02)-888 0571

SINGAPORE

Accord Customer Care Solutions Ltd
Authorized Philips Service Center
Consumer Service
620A Lorong 1 Toa Rayoh
Singapore 319762
Tel: +65 6882 3999
Fax: +65 6250 8037

TAIWAN

Philips Taiwan Ltd.
Consumer Information Centre
13F, No. 3-1 Yuan Qu St., Nan Gang Dist.,
Taipei 115, Taiwan
Phone: 0800-231-099
Fax : (02)-3789-2641

THAILAND

Philips Electronics (Thailand) Ltd.
26-28th floor, Thai Summit Tower
1768 New Petchburi Road
Khwaeng Bangkapi, Khet Huaykhwang
Bangkok10320 Thailand
Tel: (66)2-6528652
E-mail: cic Thai@philips.com

Africa

MOROCCO

Philips Electronique Maroc
304,BD Mohamed V
Casablanca
Phone: (02)-302992
Fax : (02)-303446

SOUTH AFRICA

PHILIPS SA (PTY) LTD
Customer Care Center
195 Main Road
Martindale, Johannesburg
P.O. box 58088
Newville 2114
Telephone: +27 (0) 11 471 5194
Fax: +27 (0) 11 471 5123
E-mail: phonecare.za@philips.com

Middle East

DUBAI

Philips Middle East B.V.
Consumer Information Centre
P.O.Box 7785
DUBAI
Phone: (04)-335 3666
Fax : (04)-335 3999