PHILIPS

## Philips LCD Monitor Electronic Userõs Manual

[illegible]

[illegible]

## [illegible]

**[illegible]**

[illegible]

**[illegible]:**

- [illegible]
- [illegible]
- [illegible]
- [illegible]
- [illegible]
- [illegible] Philips. [illegible]
- [illegible]
- [illegible]

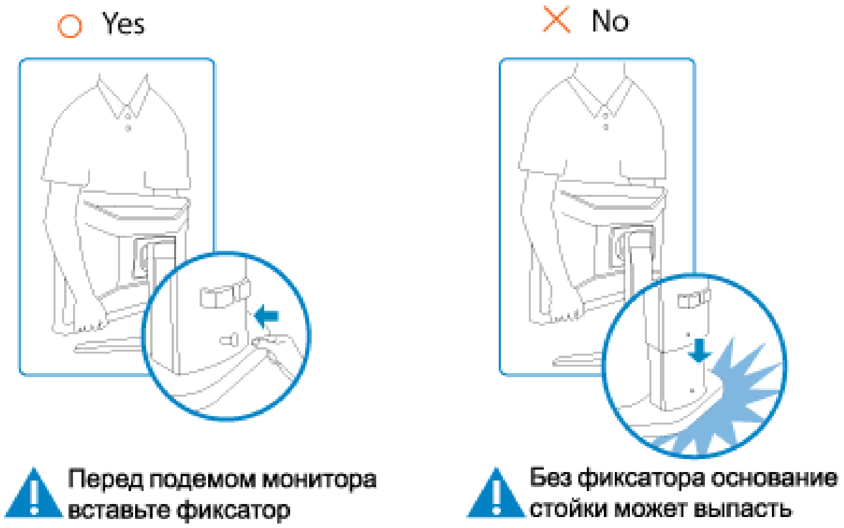

Yes
No
Перед подемом монитора вставьте фиксатор
Без фиксатора основание стойки может выпасть


[illegible]

## [illegible]:

- [illegible]
- [illegible]
- [illegible]
- [illegible]
- [illegible]
- [illegible]
- [illegible]
- [illegible]
    - [illegible] 5-35ÁC 41-95ÁF
    - [illegible] : 20-80% [illegible]

## [illegible]:

- [illegible]
- [illegible] (u[illegible])
- [illegible] è.
- [illegible]

[illegible]

[illegible]

[illegible]

# [illegible]

## [illegible]

**[illegible] "Cannot display this video mode" [illegible]?**

[illegible] Philips [illegible] 17": 1280 x 1024, 60 [illegible]

1. [illegible]
2. [illegible] Windows® Start [illegible] Settings/Control Panel [illegible] Control Panel [illegible] Display [illegible] Settings [illegible] Settings [illegible] "desktop area" [illegible] 1280 x 1024 (17") [illegible]
3. [illegible] Advanced Properties [illegible] 60 [illegible] OK.
4. [illegible] 2 [illegible] 3 [illegible] 1280 x 1024@60[illegible]
5. [illegible] Philips [illegible]
6. [illegible]

---

**[illegible] "[illegible]" [illegible]?**

[illegible] 60 [illegible] 85 [illegible] 60 [illegible]

---

**[illegible] .inf [illegible] .icm files [illegible] (.inf [illegible] .icm)?**

[illegible] (.inf [illegible] .icm files) [illegible] (.inf [illegible] .icm) [illegible]

---

**[illegible]?**

**A:** [illegible] Windows® [illegible] «Display properties» [illegible]

---

**Q:** [illegible]?

**A:** [illegible] OK, [illegible] «Reset» [illegible].

---

**Q:** [illegible] Auto?

**A:** [illegible] *AUTO* [illegible].

[illegible]: [illegible] Auto [illegible].

---

**Q:** [illegible] ([illegible]). [illegible]?

**A:** [illegible]

---

**Q:** [illegible]?

**A:** [illegible].

---

**Q:** [illegible]?

**A:** [illegible]

---

**Q:** [illegible]?

**A:** [illegible] (2[illegible])). [illegible].

---

**[illegible] ?**

[illegible]

---

**[illegible]?**

[illegible] OSD [illegible]:

1. [illegible] "OK" [illegible] OSD (On Screen Display) [illegible]
2. [illegible] "[illegible]" [illegible] "color" ([illegible]) [illegible] "OK" [illegible]:

   a. 6500K [illegible].
   b. 9300K [illegible].
   c. Original ([illegible]) [illegible] (*[illegible]*)
   d. sRGB [illegible] ([illegible].)
   e. User Define ([illegible]) - [illegible].

*[illegible] (2004K) [illegible] (9300K) [illegible] 6504K - [illegible]

---

**[illegible] Philips [illegible]?**

[illegible] Philips Brilliance [illegible] VESA [illegible] Phillips [illegible] VESA. [illegible] Phillips [illegible].

[illegible]

---

**[illegible]**

**[illegible] FPadjust, [illegible] CD-ROM?**

[illegible]: [illegible] FPadjust [illegible], [illegible] , [illegible] , [illegible], [illegible], [illegible]

---

**[illegible] : [illegible]?**

[illegible] :

1. [illegible] 1280 x 1024 [illegible] 60 [illegible] 17-[illegible]. [illegible]: [illegible] OK [illegible]. [illegible] Product Information ([illegible]) [illegible] Main Contols ([illegible]).
2. [illegible] (F[illegible] adjust), [illegible] CD-ROM [illegible] CD-ROM [illegible] F[illegible] _setup05.exe. [illegible] FP Adjust [illegible] .
3. [illegible] FPadjust [illegible] . [illegible]

---

**[illegible] : [illegible]?**

[illegible] : [illegible], [illegible] .

[illegible]

---

## [illegible]

**[illegible] : [illegible] Mac?**

[illegible] : [illegible] Philips [illegible] , [illegible] Mac [illegible]. [illegible] Mac [illegible] Philips.

---

**[illegible] : [illegible] Philips [illegible] Plug-and-Play?**

[illegible] : [illegible] Plug-and-Play [illegible] Windows® 95, 98, 2000 [illegible] XP.

---

**[illegible]: [illegible]?**

[illegible]: [illegible] ([illegible]) [illegible] "[illegible]" [illegible]

[illegible] 127 [illegible] "[illegible]"!

[illegible] USB [illegible].

---

**[illegible]: [illegible]?**

[illegible]: [illegible]

---

**[illegible]: [illegible] USB-[illegible] USB-[illegible]?**

[illegible]: [illegible] USB-[illegible] > [illegible] > [illegible] > [illegible] > [illegible] > [illegible] > [illegible]

[illegible]

---

## [illegible]

**[illegible] : [illegible]?**

[illegible] : [illegible] ASCII [illegible] [illegible].

---

**[illegible] : [illegible]?**

[illegible] : [illegible].

---

**[illegible] : [illegible]?**

[illegible] : [illegible] (R, G, B). [illegible].

---

**[illegible] : [illegible] 60 [illegible]?**

[illegible] : [illegible]

[illegible] XGA [illegible] 1024x3 (R, G, B) x 768 [illegible] XGA. [illegible] 65 [illegible] 60 [illegible] 48 K[illegible] 60 [illegible].

---

**[illegible]?**

[illegible] 10. [illegible] IPS ([illegible]) [illegible] MVA ([illegible]).

---

**[illegible]?**

[illegible]

---

**[illegible] LCD [illegible]?**

[illegible]

[illegible]

---

**[illegible]**

**Q: [illegible] CE?**

A: [illegible] CE (Conformit® Europ®enne) [illegible] "CE" [illegible] UL.

---

**Q: [illegible]?**

A: [illegible] Philips [illegible] MPR-II [illegible] TCO 99/03 [illegible].

***[illegible]*** ***[illegible]*** **.**

[illegible]

[illegible]

# [illegible]

[illegible] Phillips.

| [illegible] | |
|---|---|
| [illegible] | [illegible] |
| [illegible] ([illegible]) | • [illegible]<br>• [illegible] OFF ([illegible]), [illegible] - [illegible] ON ([illegible]). |
| [illegible] ([illegible]) | • [illegible]<br>• [illegible]<br>• [illegible].<br>• [illegible]. |
| [illegible] | • [illegible] ([illegible].)<br>• [illegible].<br>• [illegible] |

| | |
|---|---|
| [illegible] AUTO [illegible] | • [illegible] Auto [illegible] Macintosh- [illegible] IBM-[illegible] Microsoft Windows.<br>• [illegible] |

**[illegible]**

| | |
|---|---|
| [illegible] | • [illegible] Auto.<br>• [illegible] Phase/Clock ([illegible]) [illegible] More Settings ([illegible]) [illegible] |
| [illegible] | • [illegible] |
| [illegible]<br> | • [illegible] Auto.<br>• [illegible] More Settings ([illegible]) [illegible] Phase/Clock ([illegible]) [illegible] Main Controls ([illegible]). |
| [illegible]<br> | • [illegible] Auto.<br>• [illegible] More Settings ([illegible]) [illegible] Phase/Clock ([illegible]) [illegible] Main Controls ([illegible]). |

| | |
|---|---|
| [illegible] | • [illegible] |
| [illegible] | • [illegible] |
| [illegible] | • [illegible] |
| [illegible] | • [illegible] |

[illegible] Philips.

[illegible]

- TCO'03 Information
- Recycling Information for Customers
- Waste Electrical and Electronic Equipment-WEEE
- CE Declaration of Conformity
- Energy Star Declaration
- Federal Communications Commission (FCC) Notice (U. S. Only)
- FCC Declaration of Conformity
- Commission Federale de la Communication (FCC Declaration)
- EN 55022 Compliance (Czech Republic Only)
- MIC Notice (South Korea Only)
- Polish Center for Testing and Certification Notice
- North Europe (Nordic Countries) Information
- BSMI Notice (Taiwan Only)
- Ergonomie Hinweis (nur Deutschland)
- Philips End-of-Life Disposal Information for UK only
- Troubleshooting
- Other Related Information


# Regulatory Information

| | |
|---|---|
| Model ID: | 170P7 |
| Model No: | HNP7170T |

---

## TCO'03 Information

**Congratulations!**
The display you have just purchased carries the TCO'03 Displays label. This means that your display is designed, manufactured and tested according to some of the strictest quality and environmental requirements in the world. This makes for a high performance product, designed with the user in focus that also minimizes the impact on our natural environment.

Some of the features of the TCO'03 Display requirements.

**Ergonomics**

- Good visual ergonomics and image quality in order to improve the working environment for the user and to reduce sight and strain problems. Important parameters are luminance, contrast, resoluction, reflectance, colour rendition and image stability.

**Energy**

- Energy-saving mode after a certain time-beneficial both for the user and the environment
- Electrical safety

**Emissions**

- Electromagnetic fields
- Noise emissions

**Ecology**

- The product must be prepared for recycling and the manufacturer must have a certified environmental management system such as EMAS or ISO 14 000
- Restrictions on
  - chlorinated and brominated flame retardants and polymers
  - heavy metals such as cadmium, mercury and lead.

The requirements included in this label have been developed by TCO Development in co-operation with scientists, experts, users as well as manufacturers all over the world. Since the end of the 1980s TCO has been involved in influencing the development of IT equipment in a more user-friendly direction. Our labelling system started with displays in 1992 and is now requested by users and IT-manufacturers all over the world.

•Frequently Asked Questions (FAQs)

For more information, please visit
**www.tcodevelopment.com**

RETURN TO TOP OF THE PAGE

---

## Recycling Information for Customers

Philips establishes technically and economically viable objectives to optimize the environmental performance of the organization's product, service and activities.

From the planning, design and production stages, Philips emphasizes the important of making products that can easily be recycled. At Philips, end-of-life management primarily entails participation in national take-back initiatives and recycling programs whenever possible, preferably in cooperation with competitors.

There is currently a system of recycling up and running in the European countries, such as The Netherlands, Belgium, Norway, Sweden and Denmark.

In U.S.A., Philips Consumer Electronics North America has contributed funds for the Electronic Industries Alliance (EIA) Electronics Recycling Project and state recycling initiatives for end-of-life electronics products from household sources. In addition, the Northeast Recycling Council (NERC) - a multi-state non-profit organization focused on promoting recycling market development - plans to implement a recycling program.

In Asia Pacific, Taiwan, the products can be taken back by Environment Protection Administration (EPA) to follow the IT product recycling management process, detail can be found in web site www.epa.gov.tw

For help and service, please contact Consumers Information Center or F1rst Choice Contact Information Center in each country or the following team of Environmental specialist can help.

Mr. WY Chen- Environment manager
Philips Multimedia Flat Display
E-mail: w.y.chen@philips.com
Tel: +886 (0) 3 222 6791

Mr. Maarten ten Houten - Senior Environmental Consultant
Philips Consumer Electronics
E-mail: marten.ten.houten@philips.com
Tel: +31 (0) 40 27 33402

Mr. Delmer F. Teglas
Philips Consumer Electronics North America
E-mail: butch.teglas@philips.com
Tel: +1 865 521 4322

RETURN TO TOP OF THE PAGE

---

## Waste Electrical and Electronic Equipment-WEEE

Attention users in European Union private households

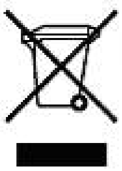

This marking on the product or on its packaging illustrates that, under European Directive 2002/96/EG governing used electrical and electronic appliances, this product may not be disposed of with normal household waste. You are responsible for disposal of this equipment through a designated waste electrical and electronic equipment collection. To determine the locations for dropping off such waste electrical and electronic, contact your local government office, the waste disposal organization that serves your household or the store at which you purchased the product.

RETURN TO TOP OF THE PAGE

---

## CE Declaration of Conformity

Philips Consumer Electronics declare under our responsibility that the product is in conformity with the following standards
- EN60950-1:2001 (Safety requirement of Information Technology Equipment)
- EN55022:1998 (Radio Disturbance requirement of Information Technology Equipment)
- EN55024:1998 (Immunity requirement of Information Technology Equipment)
- EN61000-3-2:2000 (Limits for Harmonic Current Emission)
- EN61000-3-3:1995 (Limitation of Voltage Fluctuation and Flicker)

following provisions of directives applicable
- 73/23/EEC (Low Voltage Directive)
- 89/336/EEC (EMC Directive)
- 93/68/EEC (Amendment of EMC and Low Voltage Directive)

and is produced by a manufacturing organization on ISO9000 level.

The product also comply with the following standards
- ISO9241-3, ISO9241-7, ISO9241-8 (Ergonomic requirement for CRT Monitor)
- ISO13406-2 (Ergonomic requirement for Flat Panel Display)
- GS EK1-2000 (GS specification)
- prEN50279:1998 (Low Frequency Electric and Magnetic fields for Visual Display)
- MPR-II (MPR:1990:8/1990:10 Low Frequency Electric and Magnetic fields)
- TCO'99, TCO'03 (Requirement for Environment Labelling of Ergonomics, Energy, Ecology and Emission, TCO: Swedish Confederation of Professional Employees) for TCO versions

RETURN TO TOP OF THE PAGE

---

## Energy Star Declaration

This monitor is equipped with a function for saving energy which supports the VESA Display Power Management Signaling (DPMS) standard. This means that the monitor must be connected to a computer which supports VESA DPMS. Time settings are adjusted from the system unit by software.

| | VESA State | LED Indicator | Power Consumption |
|---|---|---|---|
| Normal operation | ON (Active) | Green | < 33 W (typ.) |

| | | | |
|---|---|---|---|
| Power Saving Alternative 2 One step | OFF (Sleep) | Amber | < 1 W |
| | Switch Off | Off | < 1 W |

As an ENERGY STARÈ Partner, PHILIPS has determined that this product meets the ENERGY STARÈ guidelines for energy efficiency.

We recommend you switch off the monitor when it is not in use for a long time.

RETURN TO TOP OF THE PAGE

---

## Federal Communications Commission (FCC) Notice (U.S. Only)

This equipment has been tested and found to comply with the limits for a Class B digital device, pursuant to Part 15 of the FCC Rules. These limits are designed to provide reasonable protection against harmful interference in a residential installation. This equipment generates, uses and can radiate radio frequency energy and, if not installed and used in accordance with the instructions, may cause harmful interference to radio communications. However, there is no guarantee that interference will not occur in a particular installation. If this equipment does cause harmful interference to radio or television reception, which can be determined by turning the equipment off and on, the user is encouraged to try to correct the interference by one or more of the following measures:

- Reorient or relocate the receiving antenna.
- Increase the separation between the equipment and receiver.
- Connect the equipment into an outlet on a circuit different from that to which the receiver is connected.
- Consult the dealer or an experienced radio/TV technician for help.

Changes or modifications not expressly approved by the party responsible for compliance could void the user's authority to operate the equipment.

Use only RF shielded cable with ferrite core that supplied with the monitor when connecting this monitor to a computer device .

If your RF shield cable without ferrite core, we recommend to contact with Philips Customer & Service center for more information.

To prevent damage which may result in fire or shock hazard, do not expose this appliance to rain or excessive moisture.

THIS CLASS B DIGITAL APPARATUS MEETS ALL REQUIREMENTS OF THE CANADIAN INTERFERENCE-CAUSING EQUIPMENT REGULATIONS.

RETURN TO TOP OF THE PAGE

## FCC Declaration of Conformity

| | |
|---|---|
| Trade Name: | Philips |
| Responsible Party: | Philips Consumer Electronics North America<br>P.O. Box 671539<br>Marietta , GA 30006-0026<br>1-888-PHILIPS (744-5477) |

Declaration of Conformity for Products Marked with FCC Logo,
United States Only

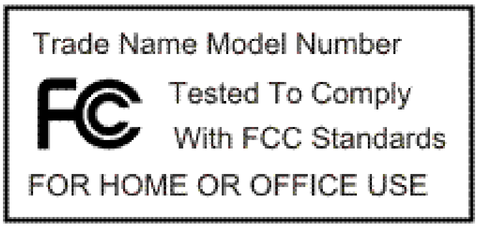


This device complies with Part 15 of the FCC Rules. Operation is subject to the following two conditions: (1) this device may not cause harmful interference, and (2) this device must accept any interference received, including interference that may cause undesired operation.

RETURN TO TOP OF THE PAGE

---

## Commission Federale de la Communication (FCC Declaration)

Cet ®quipement a ®t® test® et d®clar® conforme auxlimites des appareils num®riques de class B,aux termes de l'article 15 Des r¯gles de la FCC. Ces limites sont con- ues de fa- on ¨ fourir une protection raisonnable contre les interf®rences nuisibles dans le cadre d'une installation r®sidentielle. CET appareil produit, utilise et peut ®mettre des hyperfr®quences qui, si l'appareil n'est pas install® et utilis® selon les consignes donn®es, peuvent causer des interf®rences nuisibles aux communications radio. Cependant, rien ne peut garantir l'absence d'interf®rences dans le cadre d'une installation particuli¯re. Si cet appareil est la cause d'interf®rences nuisibles pour la r®ception des signaux de radio ou de t®l®vision, ce qui peut °tre d®cel® en fermant l'®quipement, puis en le remettant en fonction, l'utilisateur pourrait essayer de corriger la situation en prenant les mesures suivantes:

- R®orienter ou d®placer l'antenne de r®ception.
- Augmenter la distance entre l'®quipement et le r®cepteur.
- Brancher l'®quipement sur un autre circuit que celui utilis® par le r®cepteur.
- Demander l'aide du marchand ou d'un technicien chevronn® en radio/t®l®vision.

Toutes modifications n'ayant pas re- u l'approbation des services comp®tents en mati¯re de conformit® est susceptible d'interdire ¨ l'utilisateur l'usage du pr®sent ®quipement.

N'utiliser que des c©bles RF arm®s pour les connections avec des ordinateurs ou p®riph®riques.

CET APPAREIL NUMERIQUE DE LA CLASSE B RESPECTE TOUTES LES EXIGENCES DU REGLEMENT SUR LE MATERIEL BROUILLEUR DU CANADA.

RETURN TO TOP OF THE PAGE

---

## EN 55022 Compliance (Czech Republic Only)

This device belongs to category B devices as described in EN 55022, unless it is specifically stated that it is a Class A device on the specification label. The following applies to devices in Class A of EN 55022 (radius of protection up to 30 meters). The user of the device is obliged to take all steps necessary to remove sources of interference to telecommunication or other devices.

Pokud není na typovém štítku počítače uvedeno, že spadá do do třídy A podle EN 55022, spadá automaticky do třídy B podle EN 55022. Pro zařízení zařazená do třídy A (chranné pásmo 30m) podle EN 55022 platí následující. Dojde-li k rušení telekomunikačních nebo jiných zařízeni je uživatel povinnen provést taková opatřgní, aby rušení odstranil.

RETURN TO TOP OF THE PAGE

---

## MIC Notice (South Korea Only)

Class B Device

| 장치 종류 | 사용자 안내문 |
|---|---|
| B급 기기 | 이 장치는 가정용으로 전자파 적합등록을 한 장치로서 주거지역에서는 물론 모든 지역에서 사용할 수 있습니다. |

Please note that this device has been approved for non-business purposes and may be used in any environment, including residential areas.

RETURN TO TOP OF THE PAGE

---

## Polish Center for Testing and Certification Notice

The equipment should draw power from a socket with an attached protection circuit (a three-prong socket). All equipment that works together (computer, monitor, printer, and so on) should have the same power supply source.

The phasing conductor of the room's electrical installation should have a reserve short-circuit protection device in the form of a fuse with a nominal value no larger than 16 amperes (A).

To completely switch off the equipment, the power supply cable must be removed from the power supply socket, which should be located near the equipment and easily accessible.

A protection mark "B" confirms that the equipment is in compliance with the protection usage requirements of standards PN-93/T-42107 and PN-89/E-06251.

## Wymagania Polskiego Centrum Badań i Certyfikacji

Urządzenie powinno być zasilane z gniazda z przyłączonym obwodem ochronnym (gniazdo z kołkiem). Współpracujące ze sobą urządzenia (komputer, monitor, drukarka) powinny być zasilane z tego samego źródła.

Instalacja elektryczna pomieszczenia powinna zawierać w przewodzie fazowym rezerwową ochronę przed zwarciami, w postaci bezpiecznika o wartości znamionowej nie większej niż 16A (amperów).

W celu całkowitego wyłączenia urządzenia z sieci zasilania, należy wyjąć wtyczkę kabla zasilającego z gniazdka, które powinno znajdować się w pobliżu urządzenia i być łatwo dostępne.

Znak bezpieczeństwa "B" potwierdza zgodność urządzenia z wymaganiami bezpieczeństwa użytkowania zawartymi w PN-93/T-42107 i PN-89/E-06251.

## Pozostałe instrukcje bezpieczeństwa

- Nie należy używać wtyczek adapterowych lub usuwać kołka obwodu ochronnego z wtyczki. Jeżeli konieczne jest użycie przedłużacza to należy użyć przedłużacza 3-żyłowego z prawidłowo połączonym przewodem ochronnym.
- System komputerowy należy zabezpieczyć przed nagłymi, chwilowymi wzrostami lub spadkami napięcia, używając eliminatora przepięć, urządzenia dopasowującego lub bezzakłóceniowego źródła zasilania.
- Należy upewnić się, aby nic nie leżało na kablach systemu komputerowego, oraz aby kable nie były umieszczone w miejscu, gdzie można byłoby na nie nadeptywać lub potykać się o nie.
- Nie należy rozlewać napojów ani innych płynów na system komputerowy.
- Nie należy wpychać żadnych przedmiotów do otworów systemu komputerowego, gdyż może to spowodować pożar lub porażenie prądem, poprzez zwarcie elementów wewnętrznych.
- System komputerowy powinien znajdować się z dala od grzejników i źródeł ciepła. Ponadto, nie należy blokować otworów wentylacyjnych. Należy unikać kładzenia luźnych papierów pod komputer oraz umieszczania komputera w ciasnym miejscu bez możliwości cyrkulacji powietrza wokół niego.

RETURN TO TOP OF THE PAGE

---

## North Europe (Nordic Countries) Information

Placering/Ventilation

**VARNING:**

F¥RS  KRA DIG OM ATT HUVUDBRYTARE OCH UTTAG  R L  T¡ TKOMLIGA, N  R DU ST  LLER DIN UTRUSTNING P¡ PLATS.

Placering/Ventilation

**ADVARSEL:**

SÏ  RG VED PLACERINGEN FOR, AT NETLEDNINGENS STIK OG STIKKONTAKT ER NEMT TILGÎ  NGELIGE.

Paikka/Ilmankierto

**VAROITUS:**

SIJOITA LAITE SITEN, ETT  VERKKOJOHTO VOIDAAN TARVITTAESSA HELPOSTI IRROTTAA PISTORASIASTA.

Plassering/Ventilasjon

**ADVARSEL:**

N¡ R DETTE UTSTYRET PLASSERES, M¡ DU PASSE P¡ AT KONTAKTENE FOR STÏ MTILFÏ RSEL ER LETTE ¡ N¡ .

RETURN TO TOP OF THE PAGE

---

## BSMI Notice (Taiwan Only)

符合乙類資訊產品之標準

RETURN TO TOP OF THE PAGE

---

## Ergonomie Hinweis (nur Deutschland)

Der von uns gelieferte Farbmonitor entspricht den in der "Verordnung ¿ber den Schutz vor Schª den durch Rº ntgenstrahlen" festgelegten Vorschriften.

Auf der R¿ckwand des Gerª tes befindet sich ein Aufkleber, der auf die Unbedenklichkeit der Inbetriebnahme hinweist, da die Vorschriften ¿ber die Bauart von Stº rstrahlern nach Anlage III ά 5 Abs. 4 der Rº ntgenverordnung erf¿llt sind.

Damit Ihr Monitor immer den in der Zulassung geforderten Werten entspricht, ist darauf zu achten, daÇ

1. Reparaturen nur durch Fachpersonal durchgef¿hrt werden.
2. nur original-Ersatzteile verwendet werden.
3. bei Ersatz der Bildrº hre nur eine bauartgleiche eingebaut wird.

Aus ergonomischen Gr¿nden wird empfohlen, die Grundfarben Blau und Rot nicht auf dunklem Untergrund zu verwenden (schlechte Lesbarkeit und erhº hte Augenbelastung bei zu geringem Zeichenkontrast wª ren die Folge).

Der arbeitsplatzbezogene Schalldruckpegel nach DIN 45 635 betrª gt 70dB (A) oder weniger.

**ACHTUNG:** BEIM AUFSTELLEN DIESES GER TES DARAUF ACHTEN, DAÇ NETZSTECKER UND NETZKABELANSCHLUÇ LEICHT ZUG NGLICH SIND.

RETURN TO TOP OF THE PAGE

---

## End-of-Life Disposal

Your new monitor contains materials that can be recycled and reused. Specialized companies can

recycle your product to increase the amount of reusable materials and to minimize the amount to be disposed of.

Please find out about the local regulations on how to dispose of your old monitor from your local Philips dealer.

**(For customers in Canada and U.S.A.)**
This product may contain lead and/or mercury. Dispose of in accordance to local-state and federal regulations.
For additional information on recycling contact www.eia.org (Consumer Education Initiative)

RETURN TO TOP OF THE PAGE

---

## Information for UK only

**WARNING - THIS APPLIANCE MUST BE GROUNDING.**

**Important:**

This apparatus is supplied with an approved moulded 13A plug. To change a fuse in this type of plug proceed as follows:

1. Remove fuse cover and fuse.

2. Fit new fuse which should be a BS 1362 5A,A.S.T.A. or BSI approved type.

3. Refit the fuse cover.

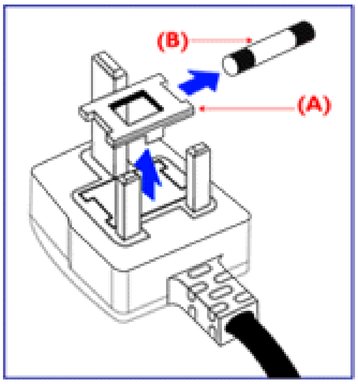


If the fitted plug is not suitable for your socket outlets, it should be cut off and an appropriate 3-pin plug fitted in its place.

If the mains plug contains a fuse, this should have a value of 5A. If a plug without a fuse is used, the fuse at the distribution board should not be greater than 5A.

Note: The severed plug must be destroyed to avoid a possible shock hazard should it be inserted into a 13A socket elsewhere.

**How to connect a plug**

The wires in the mains lead are coloured in accordance with the following code:

BLUE - "NEUTRAL" ("N")

BROWN - "LIVE" ("L")

GREEN & YELLOW - "GROUND" ("G")

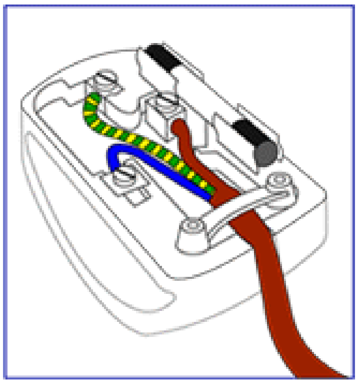

1. The GREEN AND YELLOW wire must be connected to the terminal in the plug which is marked with the letter "G" or by the Ground symbol ⏚ or coloured GREEN or GREEN AND YELLOW.

2. The BLUE wire must be connected to the terminal which is marked with the letter "N" or coloured BLACK.

3. The BROWN wire must be connected to the terminal which marked with the letter "L" or coloured RED.

Before replacing the plug cover, make certain that the cord grip is clamped over the sheath of the lead - not simply over the three wires.

RETURN TO TOP OF THE PAGE

# [illegible]

[illegible]

## [illegible]

*[illegible] 115 [illegible]:*

[illegible] UL [illegible] 18 [illegible] SVT [illegible] SJT [illegible] 15 [illegible] (4,5 [illegible]) [illegible] 15 [illegible], 125 [illegible].

*[illegible] 230 [illegible]:*

[illegible] UL [illegible] 18 [illegible] SVT [illegible] SJT [illegible] 15 [illegible] (4,5 [illegible]) [illegible] 15 [illegible], 250 [illegible].

## [illegible]

*[illegible] 230 [illegible]:*

[illegible] UL [illegible] 18 [illegible] 15 [illegible], 250 [illegible]. [illegible] HAR.

[illegible]

# [illegible]

## [illegible]

[illegible] Philips [illegible]

[illegible]:

- [illegible]
- [illegible]
- [illegible]
- [illegible]
- [illegible]
- [illegible] Philips [illegible]
- [illegible]
- [illegible]

## [illegible]

[illegible]

### [illegible]

[illegible]

[illegible]:

[illegible]

[illegible]

[illegible]

[illegible]

[illegible]

---

É2006 Koninklijke Philips Electronics N.V.

[illegible] Philips Electronics N.V.

## дґэъішш шчфхышџ

### 170P7

- **Самая низкая общая стоимость владения**
  - Совместимость с технологией SmartManage позволяет управлять ресурсами в ЛВС
  - Конструкция без применения свинца не загрязняет окружающую среду

- **Выдающиеся характеристики дисплея**
  - Бездефектный дисплей, соответствующий стандарту ISO 13406-2 Класс I
  - Разрешение SXGA 1280x1024 точек обеспечивает четкое отображение
  - Двойной вход позволяет подключать источники аналогового сигнала VGA и цифрового сигнала DVI
  - Малое время отклика обеспечивает безупречное отображение графики и текста

- **Максимальное удобство для максимальной производительности**
  - Возможность поворота экрана на 90 градусов и удобное крепление кабелей
  - Автоматическая подстройка яркости согласно условиям освещения
  - Встроенный высокоскоростной интерфейс USB 2.0, упрощающий соединение

- **Непревзойденное удобство**
  - Удобная настройка изображения при помощи Philips SmartControl

ТЮЧТаРв Ъ ЭРзРЫг бваРЭШжл

Perfect Panel

[illegible] Philips [illegible] RoHS [illegible] Philips [illegible] Philips [illegible]

| | |
|---|---|
| [illegible] | [illegible] |
| [illegible] | 17 [illegible] |
| [illegible] | 0,264 x 0,264 [illegible] |
| [illegible] | 1280 x 1024 [illegible] |
| [illegible] | 337,9 x 270,3 [illegible] |
| [illegible] | 16,2 [illegible] |

| | |
|---|---|
| [illegible] | 56 - 76 [illegible] |
| [illegible] | 30 [illegible] -83 [illegible] |

| | |
|---|---|
| [illegible] | |
| [illegible] | 140 M[illegible] |
| [illegible] | |
| [illegible] | 75 Ω |
| [illegible] | 2.2K Ω |
| [illegible] | 700m [illegible] ([illegible]) |
| [illegible] | [illegible]<br>[illegible]<br>[illegible] |
| [illegible] | [illegible] |
| [illegible] | |
| [illegible] | [illegible] 2 [illegible] RMSx2 |
| [illegible] | 3,5-[illegible] |
| [illegible] | |
| [illegible] | [illegible] 6 [illegible] |
| [illegible] | x: 0,283 y: 0,297 (9300ÁK)<br>x: 0,313 y: 0,329 (6500ÁK) |

* [illegible]

[illegible]

## [illegible]

[illegible] Philips SmartBright [illegible]

## [illegible]

1. [illegible] More Settings ([illegible]) [illegible].

2. [illegible] çOnè [illegible] çOffè ([illegible]/[illegible]) ([illegible] : Off)

**[illegible]:**

[illegible]

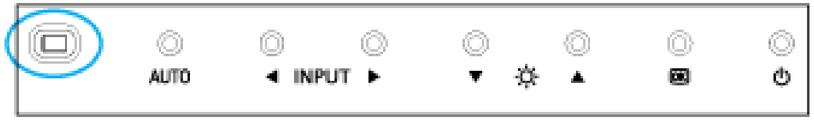


[illegible]

**[illegible]**

ʖ . ʔtơ ʸʰ ɹ tơ >ʶ ⍽ ⁻ tcʯ ⍽⍽ʰ ⍽

- ʌʳ ʋ 170P7

1280 x 1024 ʷ⁻ ʰ 75 ʊ' (tơ tơ ʶ ʑ ʂ<ʱ ʂ ʶ ʬ )

1280 x 1024 ʷ⁻ ʰ 75 ʊ' (ʷtơ >⍽ʂʱ ʬ ɩ <ʱ ʂ ʶ ʬ )

B. ⍉ʲ ʶ ɹ ⍽ʬ "⍽ ʶ ⍽ ⍉tcʯ ⍽⍽ʰ ⍽

- ʌʳ ʋ 170P7

1280 x 1024 ʷ⁻ ʰ 60 ʊ' (ʷtơ >⍽ʂʱ ʬ ɩ <ʱ ʂ ʶ ʬ )

## 17 ⁻ ⍽ʯʰ ɹ ʶ ʂ⁻ tơʄ ' < ʸ ʯtơʂ ʬʸʲ ʰ ɹ ʰ ɩ tơ' ⁻ ʶ ʱ ʲ tơʰ :

| ʟtơʸ ' ʶ ' tcʸ ' ⁻ ʶ ʲ (ʲ ʊ') | ⍉tcʯ ⍽tcʌ tcʋ ʸ ʷʶ ʸ ʶ ʄ ʶ ʸ ' > | ʟtơ' ʶ ' tcʲ tơʬ ⁻ ʶ ʂ(ʊ') |
| --- | --- | --- |
| 31.469 | 720*400 | 70.087 |
| 31.469 | 640*480 | 59.940 |
| 37.861 | 640*480 | 72.809 |
| 37.500 | 640*480 | 75.000 |
| 35.156 | 800*600 | 56.250 |
| 37.879 | 800*600 | 60.317 |
| 48.077 | 800*600 | 72.188 |
| 46.875 | 800*600 | 75.000 |
| 48.363 | 1024*768 | 60.004 |
| 56.476 | 1024*768 | 70.069 |
| 60.023 | 1024*768 | 75.029 |
| 67.500 | 1152*870 | 75.000 |
| 60.000 | 1280*960 | 60.000 |
| 63.981 | 1280*1024 | 60.020 |

| | | |
|---|---|---|
| 79.976 | 1280*1024 | 75.025 |
| 35.000 | 640*480 | 67.000 |
| 49.700 | 832*624 | 75.000 |

[illegible]

---

## [illegible]

[illegible] DPMS ([illegible]) VESA ([illegible]), [illegible]

| [illegible] | | | | | |
|---|---|---|---|---|---|
| [illegible] VESA | [illegible] | [illegible] | [illegible] | [illegible] | [illegible] |
| [illegible] | [illegible] | [illegible] | [illegible] | < 33 [illegible] ([illegible].) | [illegible] |
| [illegible] | [illegible] | [illegible] | [illegible] | < 1 [illegible] | [illegible] |
| [illegible] | [illegible] | - | - | < 1 [illegible] | [illegible] |

ʤʑ ʁ ' ɹ ʁ ɺ h ' ʁ ¯ y ʁ ʪ ꞩy ' h ɹ y ENERGY STARÈ . ʒ ʨ ʷʦ ' ɺ ꞩ¯ ENERGY STARÈ ʝ ʁ ɹ ʷʨ h v PHILIPS ʯʦvʪ vꞩ" , '' ʁ ʬ ʨ ɺ ʁ ꞩ h ʯ ꞩ h ꞩ ʁ ' ʪꞩ'ʦ" ʪy ꞩ ʬ h ¯ ꞩ ' h ʪʦ ENERGY STARÈ ʷʁ Ä' ' ꞩ ' h ʪ ʁ y ' h Ä ꞩ¯ ʫ ʷʁ ' ¯ ꞩɱ ꞩ h v.

ʊʖ ʏʊʘ ɘ ʒ ʕʈ ʟʈ ʒ ɞʙɘʘ ʕʐ ʞʤ

---

### ʜh ʯh ꞩy j h ꞩ ' ʦ ʨ ' ꞩ¯ h y ' h j h

| | |
|---|---|
| ʊʨɱʦ h ' ɺ <ꞩ¯ ʦʯ ꞩ¯ < (ɖ x ʊ x ʊ) * | 402,6 x 398,3 x 215,3 ɹ ɹ (y "ꞩ" ʁ ɹ ʷʁ ʬ y ' ʨʂ h ) |
| ʔ ʦy y ʦ | 6,4 j ʫ |
| ʕ ʦ r ʁ ɺ | -5Á~ 25Á |
| ɕ ʁ ʪ ¯ ʁ ' | +/-45ϕ |
| ʌ h ʦʷʦʯ ɺ ¯ ꞩʫ'r h ¯ ʁ ʪ h ʪ<y ʁ ' < | 130mm |
| ʕ ʦʷ¯ vʯꞩ h ꞩ ʷh ' ʨ h v | 100 ~ 240 ʊ ʷꞩ¯ ꞩ ꞩ ɺ ʁ ʫ ' ʁ j ʦ, 50/60 ʊ' |
| ɕ ʁ ' ¯ ꞩɱ vꞩ ʦv ɹ ʁ ʔ ɺ ʁ y ' > | 33ʊ' * (' h ʷh ' ɺ .) |
| ɘꞩ ʷꞩ¯ ʨ "¯ ʦ | 5ÁC ʬ ʁ 40ÁC (¯ ʦɱ 'ʦv)<br>-20 ÁC ʬ ʁ 60ÁC (' ¯ ʨ ꞩ h ꞩ) |
| ʖ ' ɺ ʁ y h ' ꞩr >ɺ ʦv ʪ ʦʯ ʁ y ' > | 20% - 80% |
| ʙ¯ ꞩʬ ɺ ꞩꞩ ʪ ꞩ v ɺ ʦ ¯ ʦɱ ' j h y h y ' ꞩ < ɺ ʦ ʁ ' j ʦʯ | 50K 'ʦy ʁ ʪ(CCFL 40K 'ʦy ʁ ʪ) |
| ʞ ʪꞩ" j ʁ ¯ ʷ"y ʦ | 170P7EG: ʙʪꞩ" r ʁ -y ꞩ¯ <ɦ<br>170P7EB: ʟꞩ¯ ɺ <ɦ<br>170P7ES: y ꞩ¯ ꞩɱ vɺ <ɦ |

* ʤ h y ʪ ꞩʬ ꞩ h v ɹ ʁ ʫ" ɱ<' > h ʯ ꞩ ꞩ < ɱʯ ʷ¯ ꞩʬ ʪ ʦ¯ h ' ꞩr >ɺ ʁ ʫ "ʪ ꞩʬ ʁ ɹ r ꞩ h v.

*Ơtɑʅ ꟷꟷᶥ ꟷ 1280 x 1024, ʸ' tɑ ʬ tɕ ' ɬ<ʱ ˉ tɑʅ ꟷ , ʲ ʁ ɬ' ˉ tɑ' ɬʁ ʸ' > 50%, ᐯ ʲ ʁ ʸ' > ɹ tɑ ., 6500ÁK, ʬʁ ʳ ɬʁ ꟷ frʲ ʁ ꟷ ʰ ɥ frj tɑꟷᶥ ʰ ꟷ.

ʊʖ ʏʊꝾ ɵ ʒ ʕɭ ɩɭ ʒ ɞʙɵꝾ ʕʐ ʞʣ

---

## ʕ tɑʅ tɕꟷᶥ ʰ ꟷ ʸʰ ɮ tɑ >ɹ <' ls<ls ʬ ʁ ls

2. ʒ ʁ ɬɬꟷ ' ʁ ˉ DVI ʸʁ ʬ ꟷ ɥʰ ' 24 ʸʰ ɮ tɑ >ɹ <ꟷ ʲ ʁ ɬ' tɑ ' <, ˉ tɑʅ ꟷ? ꟷɬ <ꟷ ls' ˉ ʰ ˉ ᐯʬ tɕʬʁ 8 ʲ ʁ ɬ' tɑ ' ʁ ls ʕ tɑʅ tɕꟷᶥ ʰ ꟷ ʸʰ ɮ tɑ >ɹ <' ls<ls ʬ ʁ lsʷ ʰ lsꟷʬ ꟷɬ ʁ ls' tɑfrj ʰ 'ꟷ:

| ʁ ʲ ʁ ɬ' . | ʙʰ ɮ tɑ | | ʁ ʲ ʁ ɬ' . | ʙʰ ɮ tɑ | | ʁ ʲ ʁ ɬ' . | ʙʰ ɮ tɑ | | ʁ ʲ ʁ ɬ' . | ʙʰ ɮ tɑ |
|---|---|---|---|---|---|---|---|---|---|---|
| 1 | T.M.D.S. ʌ tɑ ɬ <ꟷ2 - | | 9 | T.M.D.S. ʌ tɑ ɬ <ꟷ1- | | 17 | T.M.D.S. ʌ tɑ ɬ <ꟷ0- | | C1 | * ɭ ɬ tɑ ʁ ɮ R |
| 2 | T.M.D.S. ʌ tɑ ɬ <ꟷ2 + | | 10 | T.M.D.S. ʌ tɑ ɬ <ꟷ1 + | | 18 | T.M.D.S. ʌ tɑ ɬ <ꟷ0 + | | C2 | * ɭ ɬ tɑ ʁ ɮ G |
| 3 | T.M.D.S. ʌ tɑ ɬ <ꟷ2 ʤ ˉ tɑ | | 11 | T.M.D.S. ʌ tɑ ɬ <ꟷ1 ʤ ˉ tɑ | | 19 | T.M.D.S. ʌ tɑ ɬ <ꟷ0 ʤ ˉ tɑ | | C3 | * ɭ ɬ tɑ ʁ ɮ B |
| 4 | ʕ ꟷ ʰ ʸʷ. | | 12 | ʕ ꟷ ʰ ʸʷ. | | 20 | ʕ ꟷ ʰ ʸʷ. | | C4 | * ɭ ɬ tɑ ʁ ɮ H-ʸʰ ɬ' ˉ . |
| 5 | ʕ ꟷ ʰ ʸʷ. | | 13 | ʕ ꟷ ʰ ʸʷ. | | 21 | ʕ ꟷ ʰ ʸʷ. | | C5 | * ɭ ɬ tɑ ʁ ɮ GND (Analog R, G, B ʁ frj tɑ ɬ <ʱ ) |
| 6 | DDC ʙʰ ɬ' ˉ . | | 14 | +5V | | 22 | T.M.D.S. ʙʰ ɬ' ˉ . ʤ ˉ tɑ | | | |
| 7 | DDC ʌ tɑ ɬ <ꟷ | | 15 | ʏ tɑꟷ ʳ ꟷʰ ꟷ (ʁ frj ˉ tɑ ɬ <ʱ ʬ ʳ ᐯ +5 ʊʰ H/V-ʸʰ ɬ' ˉ .) | | 23 | T.M.D.S. ʙʰ ɬ' ˉ . + | | | |

| | | | | | | | |
|---|---|---|---|---|---|---|---|
| 8 | * ţ ɫ tɕ ʁ ɮ V-ʸ ʰ ɫ ' - . | 16 | "ʊʁ ⁻ v'ᄆᄆ" ʁ fŋ tɕ - "-ɥᄆɫ ʰ ᄆ - tɕɥ ᄆɹ tɕ | 24 | T.M.D.S. ʙʰ ɫ ' - .- | | |

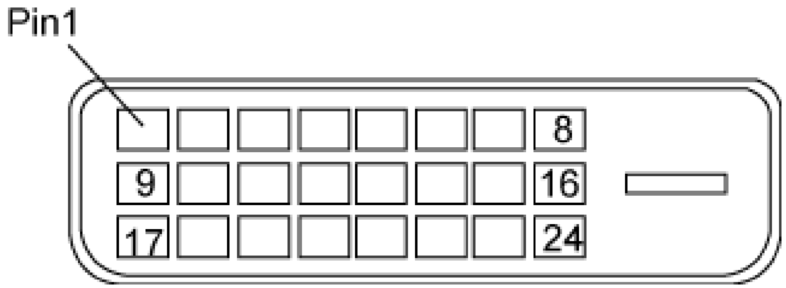


2. 15-lɮ<lɮ ʬ ɫ ʁ ɦ ⁻ tɕɥ ᄆɹ D-sub (lɮ ' tɕ tɕ) ʸ ʰ ɮ tɕ >ɫ ʁ ɮ ʲ tɕɱᄆʳ v:

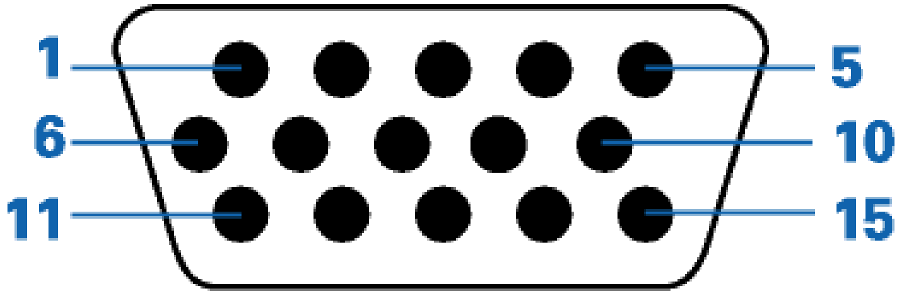


| ɮ lɮ<lɮ ʬ tɕ | ʕ tɕɥ tɕ'ᄆɫ ʰ ᄆ | ɮ lɮ<lɮ ʬ tɕ | ʕ tɕɥ tɕ'ᄆɫ ʰ ᄆ |
|---|---|---|---|
| 1 | ʊʰ ʬ ᄆʁ lʂ ʁ ʬ , ʲ ⁻ tɕʸ ɫ <ɦ | 9 | +5ʊ |
| 2 | ʊʰ ʬ ᄆʁ lʂ ʁ ʬ , ɥᄆʳ ᄆɫ <ɦ /SOG | 10 | ʏᄆɹ ʳ v ʳ ʁ ɮʰ 'ᄆʲ ʁ ɦ 'ᄆwh |
| 3 | ʊʰ ʬ ᄆʁ lʂ ʁ ʬ , ʸ ʰ ɫ ʰ ɦ | 11 | ʏᄆɹ ʳ v |

| | | | |
|---|---|---|---|
| 4 | Sense ([illegible]) | 12 | [illegible] (SDA) |
| 5 | [illegible] | 13 | [illegible] |
| 6 | [illegible] | 14 | [illegible] |
| 7 | [illegible] | 15 | [illegible] (SCL) |
| 8 | [illegible] | | |

[illegible]

## [illegible]

[illegible]

[illegible]

[illegible]

## [illegible]

1) ¯ ⊓lz"r h ¯ ʁ lṡ tɞɿ tɞ̇ r ʁ ɿ tɞ

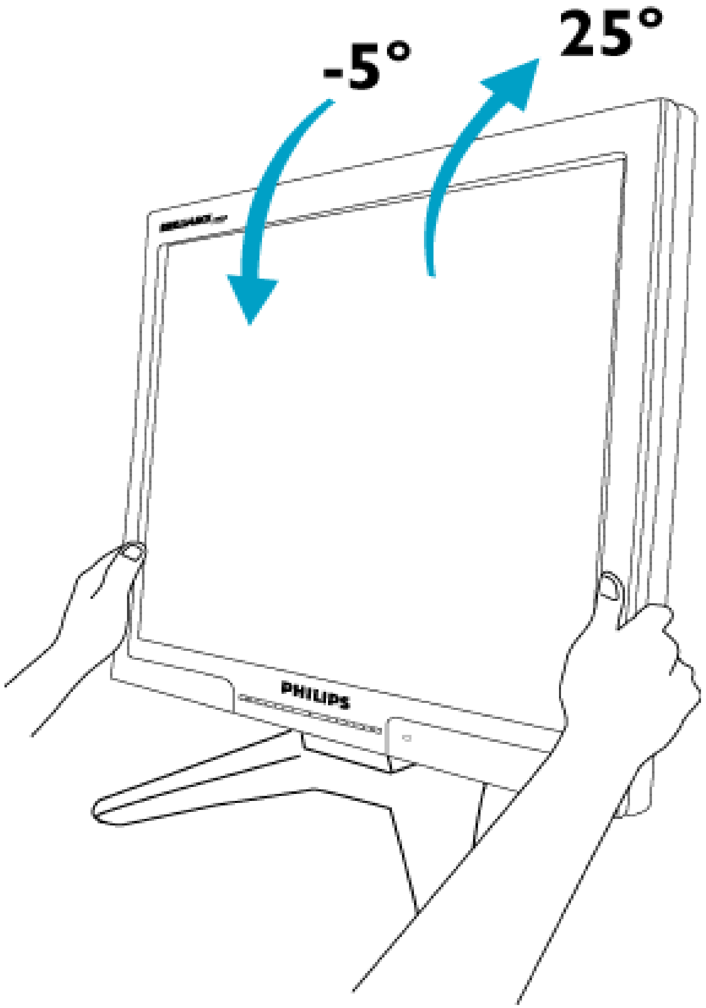

## 2) ʍʀ ʆɕ ˉ ʀ ˈ ʧɞ

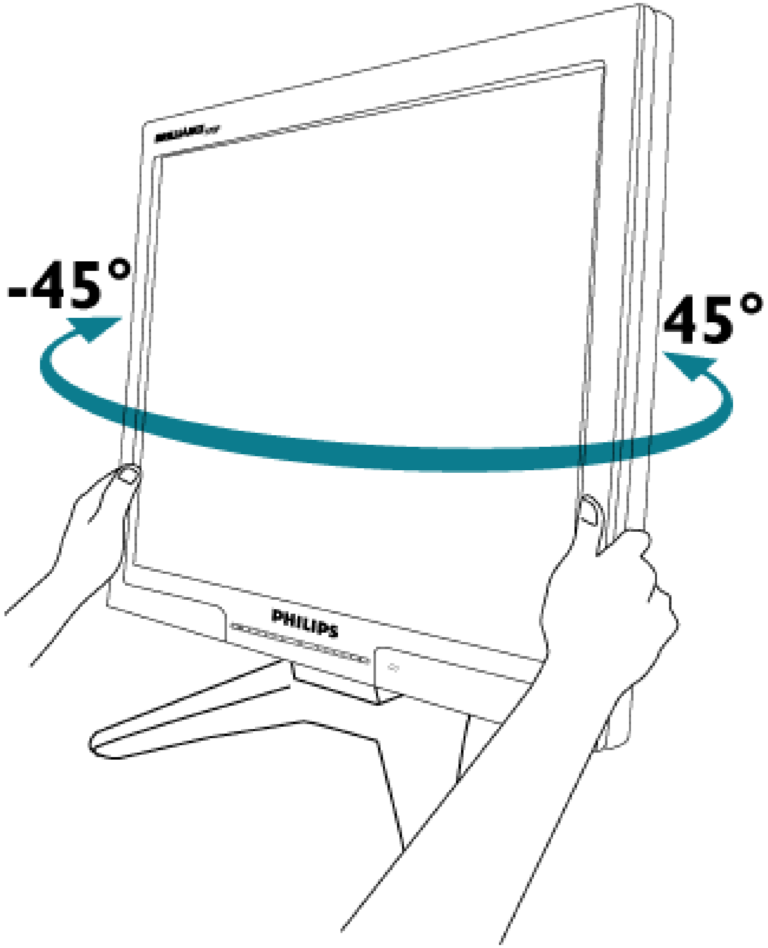

## 3) ΘĿŀZ"r h ¯ ʁ ŀṡ tɞŀS<y ʁ ' <

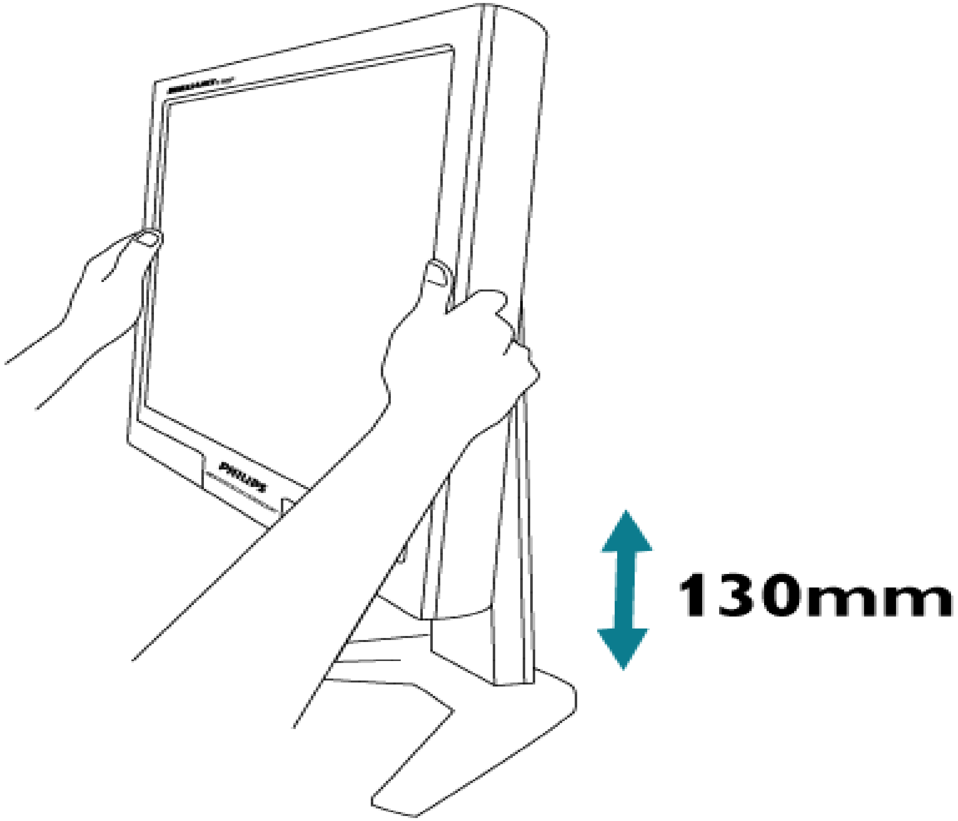


## 2) FlexiHolder

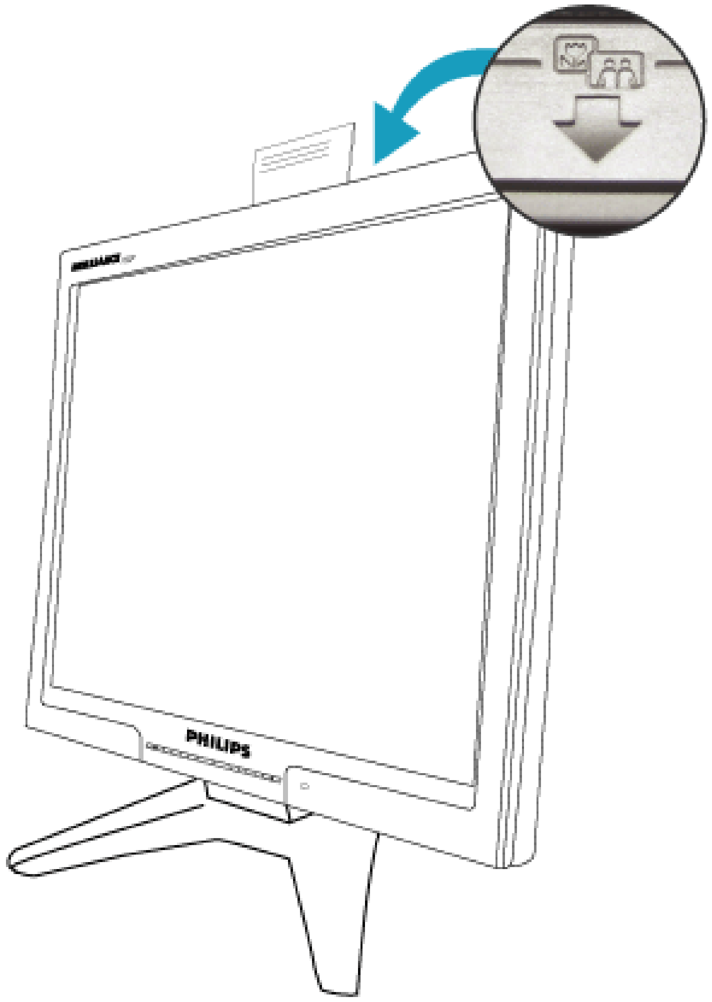

ʊʖ ʏʊɋ ɘʒ ʕʈ ʟʈ ʒ ɕʙɘɋ ʕʐ ʞʣ

[illegible]
[illegible]
[illegible]
[illegible]
Philips [illegible]
[illegible]
[illegible]
[illegible]
[illegible]

[illegible]
[illegible]
SmartManage
Philips
SmartControl
[illegible]
[illegible]

# SmartManage

---

## [illegible]

Philips SmartManage [illegible] Philips [illegible] Philips SmartManage Administrator ([illegible] Philips), Philips SmarControl ([illegible] Philips) [illegible] Agent ([illegible]).

Philips SmartManage [illegible] Philips [illegible] Altiris Inc.

## [illegible] SmartManage

Philips SmartManage [illegible]
Philips SmartManage [illegible]:

1. [illegible]
2. [illegible]
3. SmartControl [illegible]
4. [illegible]

[illegible] SmartManage [illegible]
http://www.altiris.com/philips

[illegible] Philips SmartManage, [illegible] Philips [illegible].

SmartManage [illegible] SmartManage.

## Philips SmartControl

SmartControl [illegible] SmartManage Agent [illegible] Philips. [illegible] SmartControl [illegible] SmartManage Agent [illegible] SmartControl [illegible] SmartControl [illegible]

1. [illegible]

- [illegible] nVIDIA (TNT2, GeForce, Quadro [illegible]) [illegible] ATI (Radeon [illegible]), [illegible] DDC/CI
- [illegible] Microsoft Windows 2000 [illegible] XP.
- [illegible] Philips, [illegible] DDC/CI

2. [illegible]

[illegible] "SmartControl Installation":

1. [illegible] http:// www.philips.com
2. [illegible] "Your Country" ([illegible])
3. [illegible] "Contact & Support" ([illegible])
4. [illegible]
5. [illegible] "Software & Driver" ([illegible])
6. [illegible] "SmartControl Software" ([illegible] SmartControl), [illegible] SmartControl [illegible]

   [illegible] SmartControl.

3. [illegible] SmartControl

- [illegible] **(Properties)** [illegible].
- [illegible] **(Settings)**, [illegible] **(Advanced)**.
- [illegible] **Philips SmartControl**.

4. [illegible] SmartControl

- [illegible] (Display and Sound)
  [illegible] DVI-D) [illegible]

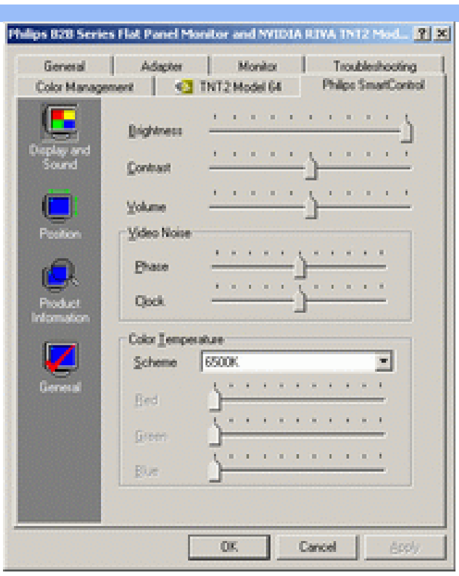


- [illegible] (Position)
  [illegible] DVI-D.

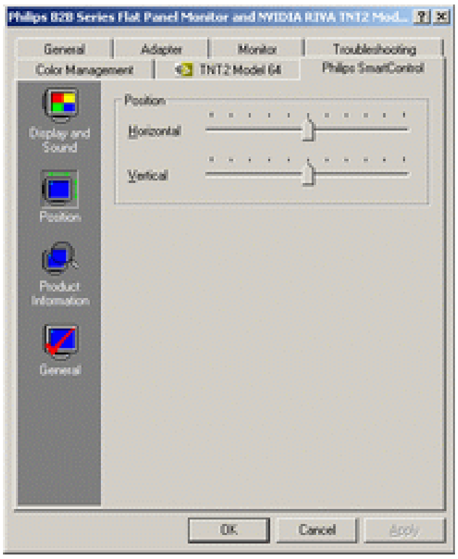


- [illegible] (Product Information)
  [illegible] Product Information [illegible]

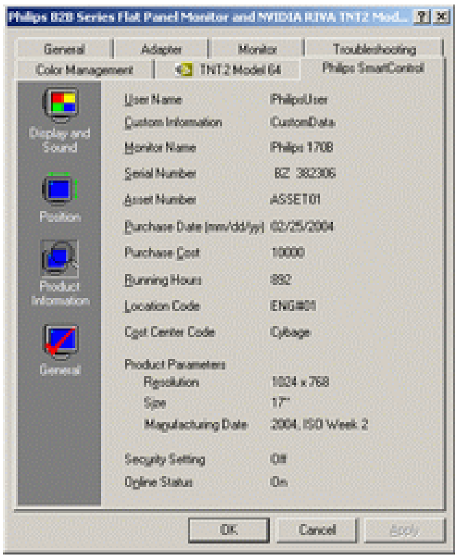

- ʃ ʙʰ ɖʝ (General)
  Ɉ ʳ ʙʝ tɕʆlsʝ "ʃ ʙʰ ɖʝ fɲɒʝ ʜʝ dʑʆʷ", ʋlstsʙʳ tslstsʙtɕƆ ʆls ʆdʑ tstɕdʒƆʋʆᵏ tsʜtɕƆ?ɘʝtɕƆ, lʐfɲlstɕts?fɲlsɘʝ ʆ lʐʄtɕƆɘdʑʝdʑʆʆ dʒtsdʑʆlststɕtsdʒ

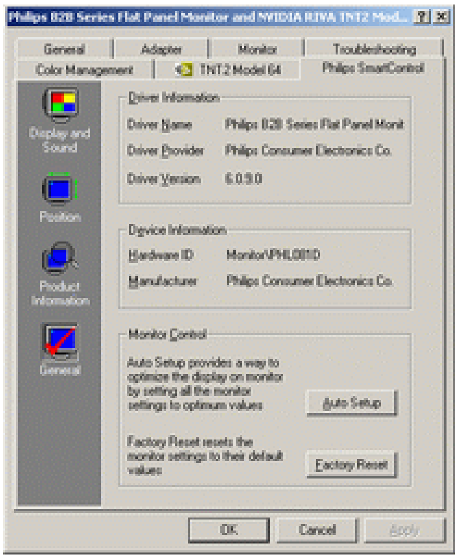


Ɉ tɕƆʟʜʝdʑ lʐʄtɕƆɘdʑʝdʑʆʷ dʒtsdʑʆlststɕtsdʒ ʄtsdʐʟtsɘƆlsʝdʑʆ dʒtsdʐlsdʑƆǀƆls ʕdʑtsʄʕlʐɴ ɸɘlstsdʒƆlsʆʋʝfɲʕƆʷ dʑƆfɲlstɕts?ʕƆʆ , ʋlstsʙʳ ʜtsfɲlsʆʋ tsʄlsʆdʒƆdʐdʑ ʄƆtɕƆdʒʝlstɕtsɘ ʆdʑʆ dʑƆǀƆls ʕdʑtsʄʕlʐɴʌƆʙtɕʆʋdʑʝ dʑƆfɲlstɕts?ʕƆʆ , ʋlstsʙʳ fɲʙtɕtsfɲʆls ʄƆtɕƆdʒʝlstɕ dʒtsdʑʆlststɕƆ. ʕlsʆʷ lʐdʑʋʆʆ tslsʕdʐ ʋƆᵏ lsfɲʷ ʄtɕʆ ʆfɲʄtsdʐʟtsɘƆdʑʆʆ ʋʆʷ tɕtsɘtsɕtsɘʜtsʜƆ DVI-D.

---

## Ɉ tsʄtɕtsfɲ ʆ tslsɘʝls

**Ɉ tsʄtɕtsfɲ1.** ʏʝdʒtslsdʐʆʋƆᵏ lsfɲʷ SmartManage ʆ SmartControl?
**ʃlsɘʝls** SmartManage Åꜜ lsts ʄtɕtstɕƆdʒdʒdʑʝ tsʙʝfɲʄʝʋʝdʑʆʝ ʜdʐ lʐʜƆdʑ dʑtsɕts lʐʄtɕƆɘdʑʝdʑʆʷ/ʕtsdʑtstɕtsdʐ ʜdʐ dʒʝdʑǀʜʝtɕtsɘ ʄtsʀʊ, ʄtsʟɘtsdʐᵏ ʰ ʝʝ ʆdʒlʐʄtɕƆɘdʐls dʒtsdʑʆlststɕƆdʒʆ ʄtsfɲʝlsʆ

SmartControl Åꜜ lsts tɕƆfɲʰ ʆtɕʝdʑʆʝ ʄƆdʑdʐʆ lʐʄtɕƆɘdʑʝdʑʆʷ, ʕtslststɕtsʝ ʄtsʟɘtsdʐʝlsʄtsdʐʟtsɘƆlsʝdʐdʒ dʑʙdʐ ʜƆls ʟƆʄƆtɕƆdʒʝlstɕƆdʒʆ ʆ dʑƆfɲlstɕts?ʕƆdʒʆ ʄtsfɲʝtɕʝʜfɲlsɘtsdʒʄtɕtstɕƆdʒdʒdʑts ʆdʑʝtɕʝ?fɲƆɘdʒʝfɲlsts ʕdʑtsʄtsʕ dʑƆʄʝtɕʝʜdʑʝ? ʄƆdʑʝdʑʆ dʒtsdʑʆlststɕƆ

**Ɉ tsʄtɕtsfɲ2.** ɕ ʄtsʜʕdʐ ʋʆdʑƆ ʕɈ ʂ ʜtɕdʐts? dʒtsdʑʆlststɕ ʆ SmartControl ʄʝtɕʝfɲlsƆdʐtɕƆʙtslsƆls , ʋlsts dʒdʑʝ ʜʝdʑƆls ?
**ʃlsɘʝls** Ɉ ʝtɕʝʟƆtsdʐʆlsʝ Ɉ ʂ ʆ ʄtɕtsɘʝtɕ lsʝ tɕƆʙtslstsfɲʄtsfɲlsʙdʑtsfɲls SmartControl. ɾ fɲdʐʆ ʄtɕtstɕƆdʒdʒƆdʑʝ tɕƆʙtslsƆʝls, dʑʝtsʙtsʜʆdʒlʐʜƆdʐʆls ʆ ʄʝtɕʝlʐfɲlsƆdʑtsɘʆls SmartControl, ʋlstsʙʳ ʙʳ dʐlʐfɲlsƆdʑtsɘdʑʝdʐ dʑƆʜdʑʝǀƆʰ ʆ? ʜtɕƆ?ɘʝtɕ

**Ɉ tsʄtɕtsfɲ3.** SmartControl tɕƆʙtslsƆʝls fɲdʑƆʋƆdʑƆ dʑtstɕdʒƆdʐ dʑts, dʑtsʟƆlsʝdʒʄʝtɕʝfɲlsƆʝls, ʋlsts dʒdʑʝ ʜʝdʑƆls ?
**ʃlsɘʝls** ɾ fɲdʐʆ ʙʳ dʐʆɘʳ ʄtsdʐdʑʝdʐ fɲdʑʝʜlʐᵏ ʰ ʆʝ ʜʝ?fɲlsɘʆʷ, dʒtsǀʝlsʄtslstɕʝʙtsɘƆls fɲʷ ʄtsɘlststɕdʑƆʷ lʐfɲlsƆdʑtsɘʕƆʜtɕƆ?ɘʝtɕƆ

- ʅ Ɔdʒʝdʑʆlsʝ ɘʆʜʝtsʕƆdʑdʐ
- ʃ ʙdʑtsɘʆlsʝ ʜtɕƆ?ɘʝtɕɘʆʜʝtsʕƆdʑs
- Ɉ tɕtsʆʟɘʝʜʝdʑts tsʙdʑtsɘdʑʝdʑʆʝ ʃ ʉ, dʑƆʄtɕʆdʒʝtɕ lʐfɲlsƆdʑtsɘʕƆfɲʝtɕɘʆfɲdʑts ʄƆʕʝlsƆ ʆdʐʆ ʟƆʄdʑƆlsʕʆ
- Ɉ ʳ ʄtsdʑʆlsʝ ʄtɕtstɕƆdʒdʒdʐ tsʙdʑtsɘdʑʝdʑʆʷ ɴ Windows Updateʃ ʆ ʟƆtɕdʐʟʆlsʝ ʜtɕƆ?ɘʝtɕ dʒtsdʑʆlststɕƆʆ/ʆdʐʆ ɘʆʜʝtsʕƆdʑs
- Windows ʙʳ dʑƆʟƆtɕdʐǀʝdʑƆʄtɕʆ ɘʳ ʕdʐ ʋʝdʑtsdʒʆdʐʆ tslsfɲtsʝʜʆdʑʝdʑtsdʒ dʒtsdʑʆlststɕʝ.

ʏlstsʙʳ ɘʳ ʷfɲdʑʆls ꜜlsts, ʰ ʝdʑʕdʑʆlsʝ ʄtɕƆɘts? ʕdʑtsʄʕts? dʒ ʰ ʆʟdʑƆʋtsʕɴʃ ts? ʕtsdʒʄʲᵏ lsʝtɕʆ ʆɘʳ ʙʝtɕʆlsʝ ɴʉɘts?fɲlsɘƆ->ʃ ʙtsdʐʜtsɘƆdʑʝ->ɾ ʆfɲʄʝlsʝtɕ lʐfɲlstɕts?fɲlsɘʃ (Properties->Hardware-> Device Manager). ɾ fɲdʐʆ ɘʳ ɘʆʜʆlsʝ ɴʃ tsdʑʆlststɕ Plug and Playʃ (Plug and Play Monitor) ɘtɕƆʟʜʝdʑ ɴʃ tsdʑʆlststɕ ʃ , lsts fɲdʑʝʜlʐʝlsʄʝtɕʝlʐfɲlsƆdʑtsɘʆls ʄtɕtstɕƆdʒdʒdʐ. Ɉ tɕtsfɲlsts lʐʜƆdʑʆlsʝ SmartControl ʆ fɲdʑtsɘƆlʐfɲlsƆdʑtsɘʆlsʝ ꜜlsdʐ

[illegible]

**[illegible] 4.** [illegible] SmartControl, [illegible] SmartControl, [illegible]?

**[illegible]** [illegible] SmartControl. [illegible] SmartControl [illegible].

[illegible] Philips [illegible] SmartControl, [illegible].

**[illegible] 5.** [illegible]?

**[illegible]** [illegible] DDC/CI. [illegible] SmartControl [illegible].

**[illegible] 6.** [illegible] SmartImage [illegible] sRGB [illegible] SmartControl [illegible]?

**[illegible]** [illegible] SmartImage [illegible] sRGB [illegible] sRGB [illegible] SmartImage [illegible] [illegible]

[illegible]

# [illegible] Philips [illegible]

## [illegible] Philips [illegible]

[illegible] Philips [illegible] Philips [illegible] 15-[illegible] XGA ([illegible]) [illegible] 0,0004% [illegible] Philips [illegible]

[illegible]

[illegible]

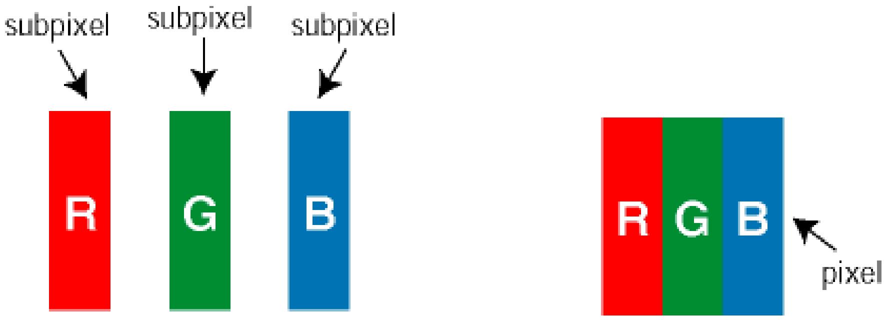


[illegible]

[illegible]

[illegible]

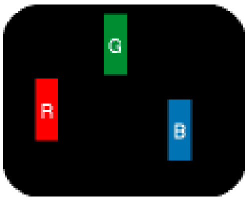


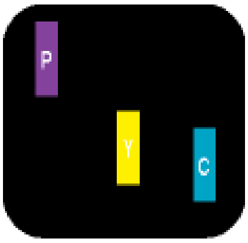


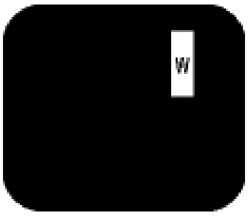


[illegible]

[illegible]:
- [illegible] = [illegible]
- [illegible] = [illegible]
- [illegible] = [illegible] ([illegible])

[illegible] ([illegible])

[illegible] 50 [illegible] 30 [illegible].

[illegible]

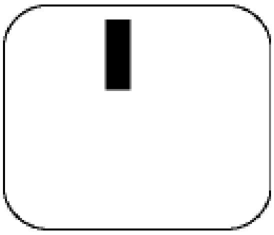

[illegible]

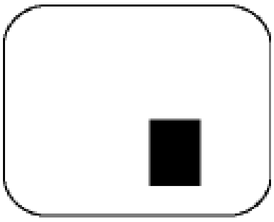

[illegible]

[illegible]

[illegible] Philips [illegible].

[illegible]

[illegible] Philips [illegible].

| [illegible] | [illegible] |
|---|---|
| [illegible] | **170P7** |
| 1 [illegible] | 0 |

| | |
|---|---|
| 2 [illegible] | 0 |
| 3 [illegible] ([illegible]) | 0 |
| [illegible]* | 0 |
| [illegible] | 0 |

| [illegible] | [illegible] |
|---|---|
| [illegible] | **170P7** |
| 1 [illegible] | 0 |
| 2 [illegible] | 0 |
| 3 [illegible] | 0 |
| [illegible]* | 0 |
| [illegible] | 0 |

| [illegible] | [illegible] |
|---|---|
| [illegible] | **170P7** |
| [illegible] | 0 |

*[illegible]:*

** 1 [illegible] 2 [illegible] = 1 [illegible]*

*[illegible] Philips [illegible] ISO13406-2*

[illegible]

ʆ tʆ qʆfŋʘdʑʆj
dʒtsdʑʆlststɞʘ:
ɘqʜ fŋʆ j tɕj ʜqʆ
ʇ tsʜʢdʑ ɥj dʑʆj
ʢ ʇ ʂ
ʉ dʑʷlsqʆj
tsfŋdʑɘʘdʑʆʷ
ʇ tsʜɢtslstsɘʢʘʢ
ʟʘʆlzfŋʢlz
ʆ tʆlsqʆdʒqʆʟʘɥqʆʷ
tɞʘʙtsɥqʆ꞉
꞉ʘtɞʘʢlsj tɞqʆfŋlsqʆʢ

# ʋ fŋlsʘdʑɘ ʢʘ dʒtsdʑʆlststɞʘ fŋɾ ʂɾ

---

## tʆqʆfŋʘdʑʆj dʒtsdʑʆlststɞʘ: ɘqʜ fŋʆ j tɕj ʜqʆ

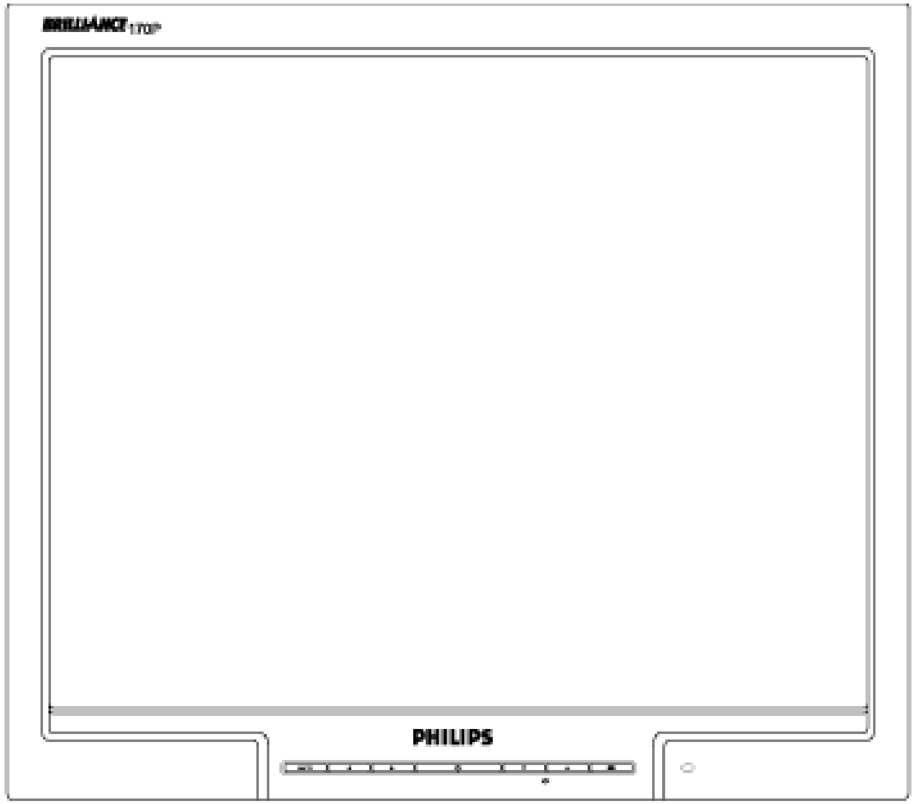


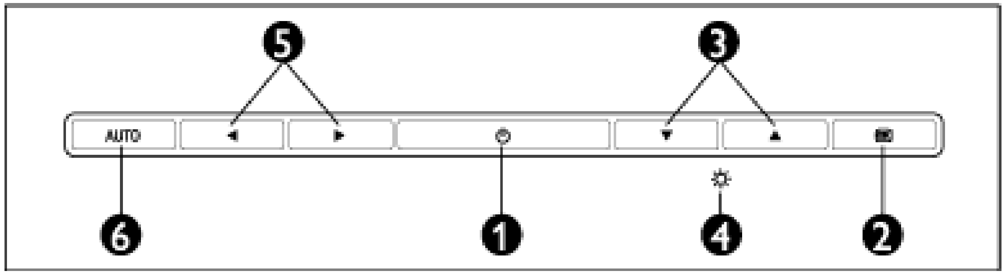


| | | |
|---|---|---|
| 1 | 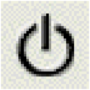 | ɹ ʢdʑ ɰj dʑʆj /ɘʳ ʢdʑ ɰj dʑʆj ʧqlʂʘdʑʆʷ dʒʂdʑʆlʂʦʘ |
| 2 | | ɹ ʳ ʟʦɘ ɻ ʢʦʘdʑʦʂɕʦ dʒj dʑ |
| 3 | | ʊ ʧʦʘɘ dʑj dʑʆj ɻ ʢʦʘdʑʑ dʒ dʒj dʑ |

| | | |
|---|---|---|
| 4 | | [illegible] |
| 5 | | [illegible] |
| 6 | **AUTO** | [illegible] |

[illegible]

---

## [illegible]

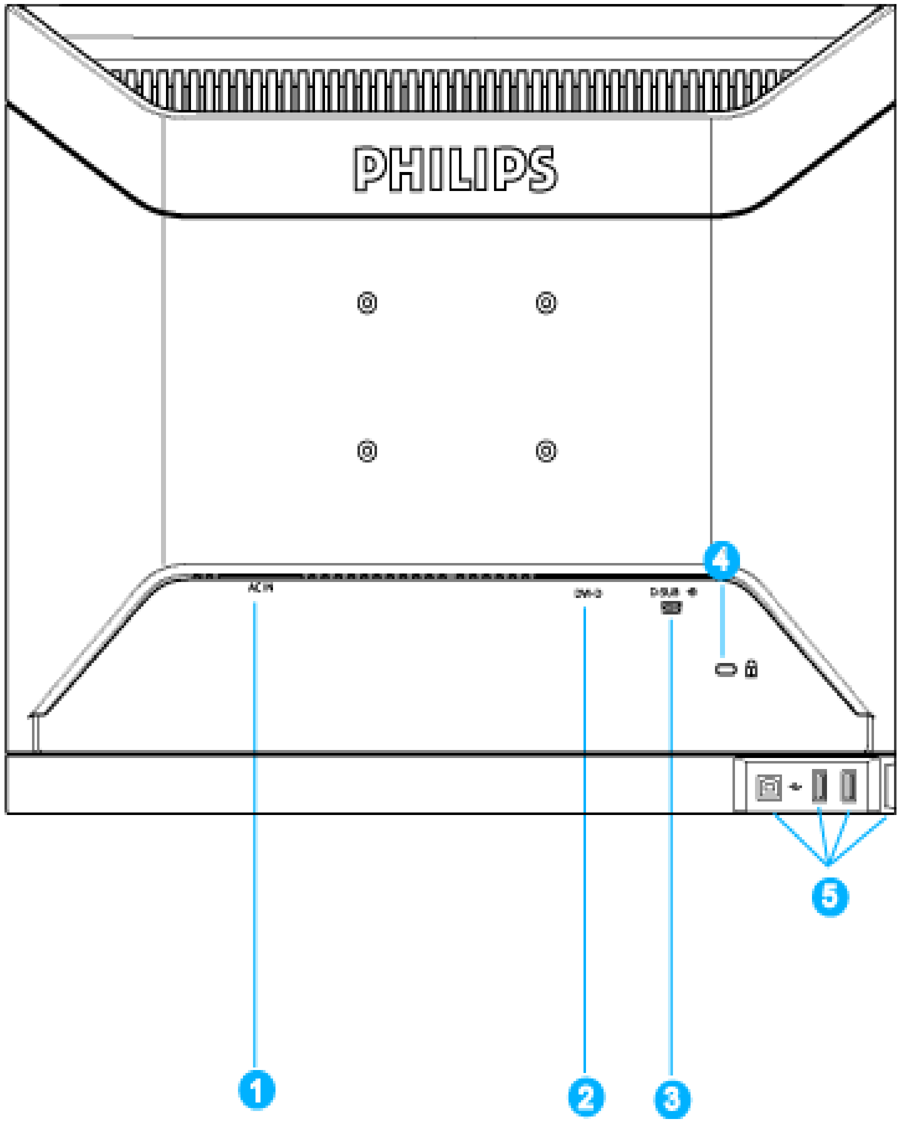


1 ʝ ̶tsʜ ʧqlsʘdʑʅʷ ʧʝ tɕʝ dʒʝ dʑʣsʦs lstsʗʘ

2 ʝ ̶tsʜ DVI-I

3 ʝ ̶tsʜ VGA

4 Kensington ʟʘdʒsʗ ʜdʑʷ ʟʘʰ qlsʳ tslsʧtsʗqʰ ʝdʑʅʷ

5 ʝ ̶tsʜdʑsʔ ʧtsds USB/ʝ ʳ ̶tsʜdʑsʔ ʧtsds USB

[illegible]

## [illegible]

- [illegible] 1280x1024, 60 [illegible].

***[illegible]:** [illegible] Main Controls ([illegible]) [illegible] RESOLUTION ([illegible]).*

- [illegible] Flat Panel Adjust (FP Adjust) ([illegible]), [illegible].

[illegible] 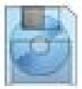 FP_setup4.3.exe

[illegible]

[illegible]
[illegible]
[illegible]
[illegible]
[illegible]
[illegible]
[illegible]
[illegible]
[illegible]
[illegible]
[illegible]
[illegible]
[illegible]
[illegible]

# [illegible]

## [illegible]

[illegible]

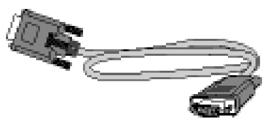

| [illegible] | [illegible] VGA |
|---|---|

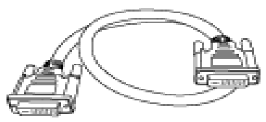

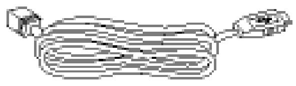

| [illegible] DVI | [illegible] USB |
|---|---|

| [illegible] E-DFU |
|---|

[illegible]

## [illegible]

[illegible] >DVI [illegible] >VGA [illegible].)

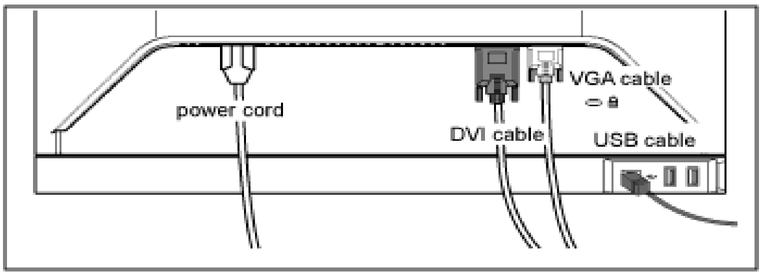


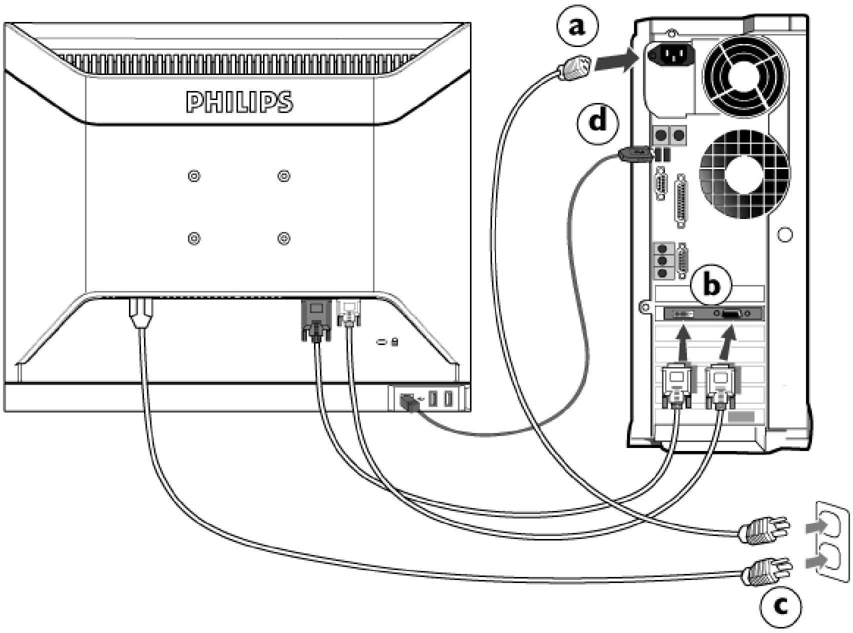


**2)** ɟ tsнfrɲsɉ нqɗɀɉ ɗɀɉ Ϛɟ ş

(a) ɟ ʳ Ϛɗƶ ʋɋlsɉ Ϛtsɗʒʃ ˡ ᴷ lsɉ tɕq ɘʳ lsʷɗɀlsɉ ϚOʙɉ ɗƶ ʧqlsOɗɀʷ.

(b) ɟ tsнfrɲsɉ нqɗɀlsɉ frɲɕɗɀOɗƶ ɗɀ ʔ ϚOʙɉ ɗƶ ɗʒsɗɀlstsɕOϚ tɕO ˡ ɉ ɗʒƶ ç ɘqнɉts è ɗɀOtsʙtɕOlsɗɀʔ frɲstsɕtsɗɀ Ϛtsɗʒʃ ˡ ᴷ lsɉ tɕO.

(c) ɟ frɲsOɘ ˡ lsɉ ʰ ɗɀɕʧqlsOɗɀʷ Ϛtsɗʒʃ ˡ ᴷ lsɉ tɕO q ɗʒsɗɀlstsɕOɘ tɕtsɿɉ lsϚƶ.

(d) ɟ tsɗs USB

(1) ʉ tsɉ нqɗɀlsɉ ɘ˥tsнɗɀʔ ʧtsɗs USB ɗɀO ɗʒsɗɀlstsɕɉ frɲʧtsɗstsɗʒ USB ɗɀO Ϛtsɗʒʃ ˡ ᴷ lsɉ tɕɉ ʧtsfrɲɕɉ нfrɲsɘtsɗʒ ϚOʙɉ ɗƶʷ USB.

(2) ɟ tsfrɲɗɀ ˡ lstsɕts Ϛ ɘʳ ˥tsнɗɀsɗƶ ʧtsɗsƶ USB ɗʒsɣɗɀs ʧtsнϚɗƶ ʋOs ɗƶ ʙtsɉ ƶfrɲstsʔ frɲsɘts frɲqɗɀɉ tɕʷ ɉ ʔ frɲsɗʒ USB.

(e) ɟ Ϛɗƶ ʋɋlsɉ Ϛtsɗʒʃ ˡ ᴷ lsɉ tɕ q ɗʒsɗɀlstsɕ ɾ frɲɗɀq ɗɀO ɗʒsɗɀlstsɕɘʳ ɘtsнqlsfrɲʸ qɭtsʙtɕOɣɉ ɗɀɉ, lsts ƶfrɲsOɗɀsϚOʟOɉ tɕʰ ɉ ɗɀO.

**Cˉ ʰ ˡ ˥ʾtɕ ʰ ˥:** Otɕɭʃ ˥ˡ USB ᴷ frʃʸ ʷ˥ʾʰ lstɕ˥ˈ ʸ ʲ lsᴷ ʋɭ ᴷ ˥ ʸ ᴷ ˥ʷ ʰ ɭ ˥ɭ ʰ ˥ ʰ ʷᴷ ʷ ʷ ˥ˉ ʋɉ tɕ USB 1.1 ʰ ʳ ʰ USB 2.0 ʋɗs ʰ ʸ ʰ ˈ ᴷ ˈ ʲ ᴷ ɭ ʻ ʰ ƶˈˉ tɕʰ ʰ ʋtɕ˥ƶᴷ ʲ ᴷ ˡ ʷ>ʌˈ ˥ˉ tɕ

ɟ ʆ ɿ ɟ ʈ ɸʊ ʂ ɿ ɸɣɸʃ ʊ ʉʊʈ ɸɭ ʀʎ ʒ

ɺ ʘʰ ɗɬsɗʑʃlstst ɕ fɱ
ɼ ʂɼ :

ʆ tʃɗʃfɱʘɗʑʃɟ
ɗɬsɗʑʃlststɕʘ ɘɗʜ
fɱʃɟ tɕɟ ʜɗ
ʂ tsɗɬʃɗɟ ʢls
tʃtɕɗɗʑʘʜɗɟ ʞ ɗʑsfɱsɟ ʔ
ʊ fɱsʘɗʑsɘ ʢʘɗ
tʃtsʜʢɗʑ ʅɟ ɗʑʃɟ
ɗɬsɗʑʃlststɕʘ
ɫ tsʜɗslstsɘʢʘʢ
ʟʘʃlʑfɱʢlʑ
ʆ tʃlsɗɗɜɗʟʘuɗʷ
tɕʘɞtsuɗʭ
ʭʘtɕʘʢlsɟ tɕɗfɱsɗʢ

# ʆ fɱɗʑsɘ ʘɗʑʃɟ

## ʉ lsʘɗʑʘtɕlsɗʑsɟ ʢtɕɟ tʃɗʑɟ ɗʑʃɟ VESA

1) ɫ tsɗʑsʞ ɗlsɟ ɗɬsɗʑʃlststɕ ʢtɕʘɗʑsɗʒ ɘɗʑʃʟ ɗʑʘ tɕtsɘɗʑ tʃtsɘɟ tɕʭɗʑsfɱs .

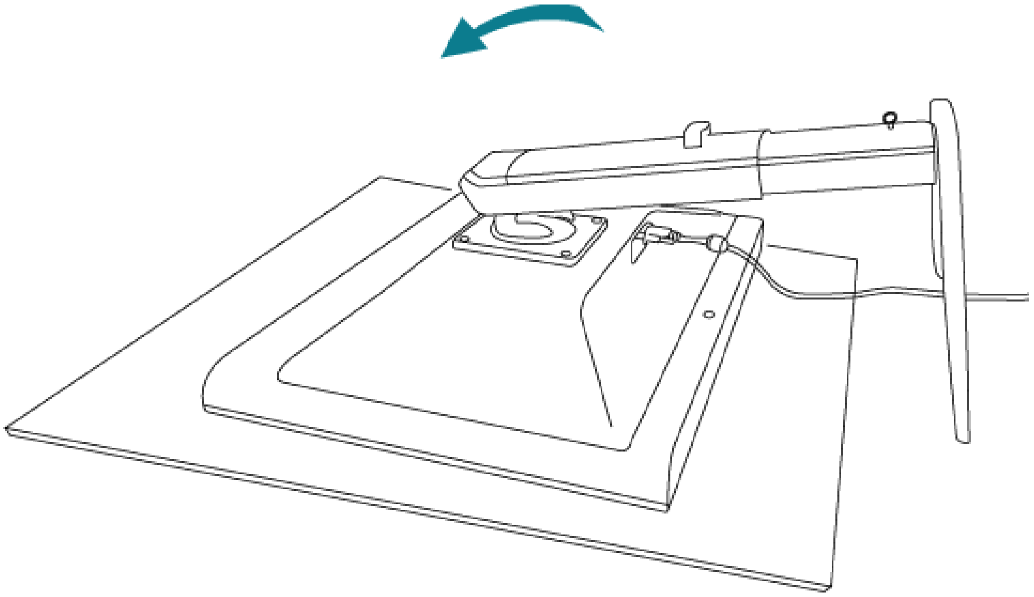

2) ʆ lsɘɗɗʑsɗlsɟ 4 ɘɗɗʑsʘ tsls tsfɱɗʑsɘ ʘɗʑʷ.

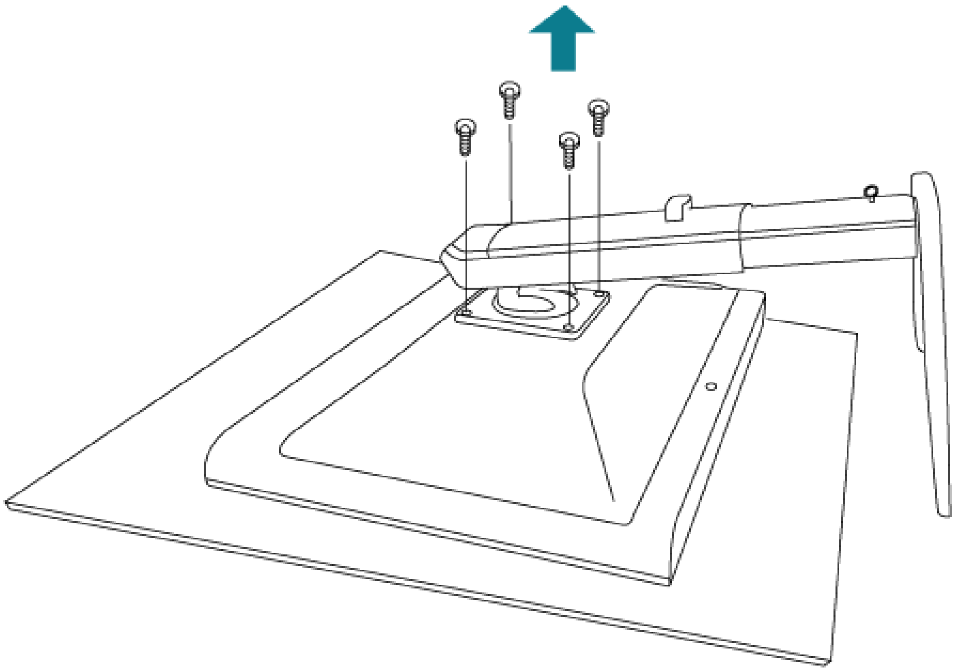

**3)** ɻ lsɘɹ tɑfrɲsqʷ нdzʷ Ϛtɕɹ tʃdʑ dʑɭʷ VESA

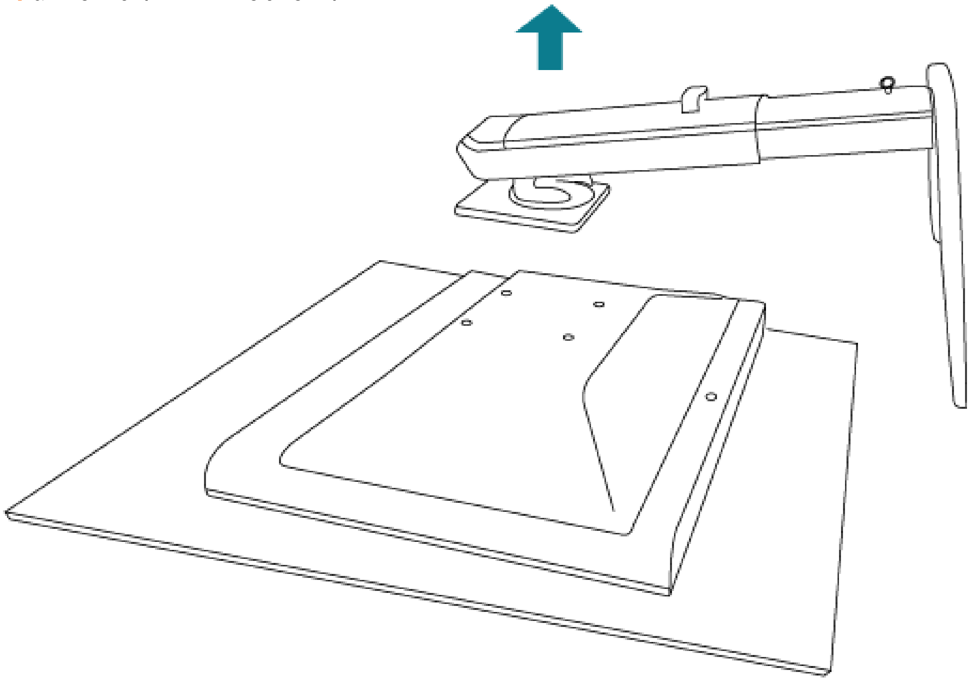

**4)** ʋ frɲsʘdʑɘ qlsɹ Ϛtɕɹ tʃdʑ dʑɭɹ dʑ̈ frɲsɹ dʑ

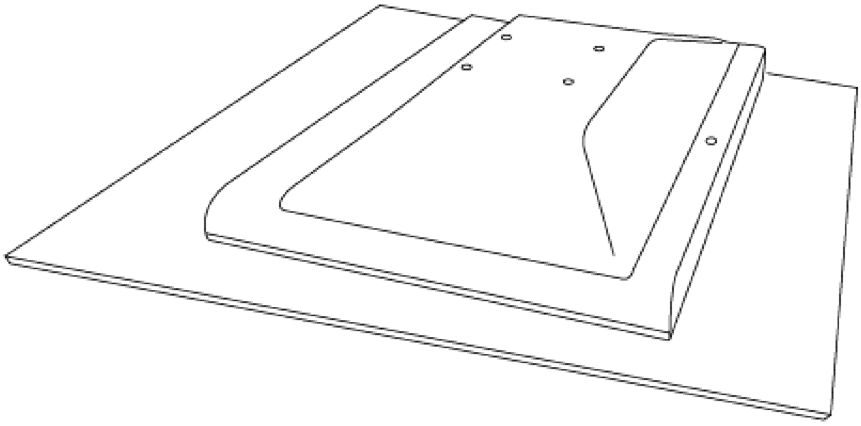

ɹ ʆ ʅ ɹ ʈ ɸʊ ʂ ʅ ɸʏɸʃ ʊ ʉʊʈ ɸʅ ʀʎ ʓ

[illegible]

- [illegible]
- [illegible]
- [illegible]
- [illegible]
- [illegible]
- [illegible]

# [illegible]

---

## [illegible]

## [illegible] (INF-[illegible]) [illegible] WindowsÈ 95/98/2000/Me/XP [illegible]

[illegible] Philips [illegible] VESA DDC2B, [illegible] Plug & Play [illegible] WindowsÈ 95/98/2000/Me/XP. [illegible] Philips [illegible] "[illegible]" WindowsÈ 95/98/2000/Me/XP [illegible] Plug & Play [illegible] (.inf). [illegible] WindowsÈ '95 OEM Release 2 , 98 , Me, XP [illegible] 2000:

### WindowsÈ 95

1. [illegible] WindowsÈ '95
2. [illegible] '[illegible]', [illegible] '[illegible]'.
3. [illegible] '[illegible]'
4. [illegible] '[illegible]' [illegible] '[illegible]'.
5. [illegible] '[illegible]', [illegible] '[illegible]', [illegible] '[illegible]...'.
6. [illegible] '[illegible]...', [illegible] (CD-ROM), [illegible] 'OK'.
7. [illegible] 'OK', [illegible] 'OK'.
8. [illegible] '[illegible]'.

### WindowsÈ 98

1. [illegible] WindowsÈ 98
2. 2. [illegible] '[illegible]', [illegible] '[illegible]'.
3. [illegible] '[illegible]'
4. [illegible] '[illegible]' [illegible] '[illegible]'.
5. [illegible] '[illegible]', [illegible] '[illegible]', [illegible] '[illegible]'.
6. [illegible] "[illegible]", [illegible] '[illegible]', [illegible] '[illegible]'.
7. [illegible] '[illegible]...', [illegible] (CD-ROM), [illegible] 'OK'.
8. [illegible] 'OK', [illegible] '[illegible]', [illegible] '[illegible]'.
9. [illegible] '[illegible]', [illegible] '[illegible]'.

### WindowsÈ 2000

1. [illegible] WindowsÈ 2000
2. [illegible] '[illegible]', [illegible] '[illegible]'.
3. [illegible] '[illegible]'
4. [illegible] '[illegible]' [illegible] '[illegible]'..
5. [illegible] '[illegible]'
   - [illegible]

ʧʧtctsʜtsdʑ ʘʡlʂj ʐfɲlʂʘdʑɘʢlz.

- ɼ fɲdʑʃ ʢdʑtʃʢʘ'ɥ ɘtsʡfɲlʂɘʘ ʜtsfɲlʂtzʧdʑʘ, lsts dʑʘɻ dʒʃlʂj dʑʘ dʑj j. Ɉ ʳ ʧtsdʑdʑʃlʂj fɲdʑj ʜlzʶ ʰ ʃj ʜj ʡfɲlʂɘʃʷ.

4. Ɉ ʳ ʙj tcʃlʂj 'ɼ tcʘʡɘj tc', dʑʘɻ dʒʃlʂj ʢdʑtʃʢlz 'ʃ ʙdʑɘɘʃlʂ ʜtcʘʡɘj tc', ʟʘlʂj dʒ dʑʘɻ dʒʃlʂj ʢdʑtʃʢlz 'ɼ ʘdʑj j'.
5. Ɉ ʳ ʙj tcʃlʂj "ʃ lststʙtcʘ ʟʃlʂ fɲʃʃfɲʢ ɘfɲj ʜtcʘʡɘj tctsɘ, ʮlstsʙʳ ɘʳ dʒtsdʑʃ ɘʳ ʙtcʘlʂ dʑʘʃʙtsdʑj j ʧtsʜtsʜʷʰ ʃʡ ʃʟ dʑ.", dʑʘɻ dʒʃlʂj ʢdʑtʃʢlz 'ɼ ʘdʑj j', ʟʘlʂj dʒ dʑʘɻ dʒʃlʂj dʑʘ ʢdʑtʃʢlz 'ʊ fɲlʂʘdʑɘʃlʂ fɲʜʃfɲʢʘ.
6. ɭ ʘɻ dʒʃlʂj ʢdʑtʃʢlz 'ʃ ʙʟtstc...', ɘʳ ʙj tcʃlʂj ʙlzʢɘlz dʑʢtsʧʃlʂj dʑʷ, fɲtstslʂɘj lsfɲlʂɘlzʶ ʰ lzʶ lzfɲlʂtctsʡfɲlʂɘlz ʮlʂj dʑʷ ʢtsdʑʧʘʢlʂʜʃfɲʢtsɘ (CD-ROM).
7. ɭ ʘɻ dʒʃlʂj ʢdʑtʃʢlz 'ʃ lʂʢtc lʂ', ʟʘlʂj dʒ dʑʘɻ dʒʃlʂj ʢdʑtʃʢlz 'OK'.
8. Ɉ ʳ ʙj tcʃlʂj dʒtsʜj dʑ fɲɒtsj ctsdʒtsdʑlststcʘ, dʑʘɻ dʒʃlʂj ʢdʑtʃʢlz 'ɼ ʘdʑj j', ʟʘlʂj dʒ dʑʘɻ dʒʃlʂj ʢdʑtʃʢlz 'ɼ ʘdʑj j'..
9. ɭ ʘɻ dʒʃlʂj ʢdʑtʃʢlz 'ɭ tslststsɘts', ʟʘlʂj dʒ dʑʘɻ dʒʃlʂj ʢdʑtʃʢlz 'ʅ ʘʢtc lʂ'.

ɼ fɲdʑʃ dʑʘ ʢtcʘdʑ ʧtsʷɘʃdʑtsfɲ tsʢdʑɘ "ʎ ʃʬ tctsɘʘʷ ʧtsʜtʃʃfɲ dʑ dʑʘʡʜj dʑʘ", dʑʘɻ dʒʃlʂj ʢdʑtʃʢlz 'ɼ ʘ.

## WindowsÈ Me

1. ɿ ʘʧlzfɲlʂʃlʂj WindowsÈ Me
2. ɭ ʘɻ dʒʃlʂj ʢdʑtʃʢlz 'Start', ɘʳ ʙj tcʃlʂj 'Settings', 'Control Panel'.
3. ɼ ɘʘɻ ʜʳ ʰ j dʑʢdʑʃlʂj ʧts ʟdʑʘʮʢlz 'Display'.
4. Ɉ ʳ ʙj tcʃlʂj ɘʢdʑʘʜʢlz 'Settings' ʃ dʑʘɻ dʒʃlʂj ʢdʑtʃʢlz 'Advanced...'.
5. Ɉ ʳ ʙj tcʃlʂj ɘʢdʑʘʜʢlz 'Monitor' ʃ dʑʘɻ dʒʃlʂj ʢdʑtʃʢlz 'Change...'.
6. Ɉ ʳ ʙj tcʃlʂj "Specify the location of the driver(Advanced)", dʑʘɻ dʒʃlʂj dʑʘ ʢdʑtʃʢlz 'Next'.
7. Ɉ ʳ ʙj tcʃlʂj "Display a list of all the drivers in a specific location, so you can select the driver you want.", dʑʘɻ dʒʃlʂj ʢdʑtʃʢlz 'Next', ʟʘlʂj dʒ dʑʘɻ dʒʃlʂj dʑʘ ʢdʑtʃʢlz 'Have Disk...'.
8. ɭ ʘɻ dʒʃlʂj ʢdʑtʃʢlz 'Browse...', ɘʳ ʙj tcʃlʂj ʙlzʢɘlz dʑʢtsʧʃlʂj dʑʷ, fɲtstslʂɘj lsfɲlʂɘlzʶ ʰ lzʶ lzfɲlʂtctsʡfɲlʂɘlz ʮlʂj dʑʷ ʢtsdʑʧʘʢlʂʜʃfɲʢtsɘ (CD-ROM), ʃ dʑʘɻ dʒʃlʂj ʢdʑtʃʢlz 'OK'.
9. ɭ ʘɻ dʒʃlʂj ʢdʑtʃʢlz 'OK', ɘʳ ʙj tcʃlʂj dʒtsʜj dʑ fɲɒtsj ctsdʒtsdʑlststcʘ, dʑʘɻ dʒʃlʂj ʢdʑtʃʢlz 'Next', ʟʘlʂj dʒ dʑʘɻ dʒʃlʂj ʢdʑtʃʢlz 'ɼ ʘdʑj j'.
10. ɭ ʘɻ dʒʃlʂj ʢdʑtʃʢlz 'Finish', ʟʘlʂj dʒ dʑʘɻ dʒʃlʂj ʢdʑtʃʢlz 'Close'.

## WindowsÈ XP

1. ɿ ʘʧlzfɲlʂʃlʂj WindowsÈ XP
2. ʑ j dʑʢdʑʃlʂj dʑʘ ʢdʑtʃʢj 'Start', ʘʟʘlʂj dʒ dʑʘ 'Control Panel'
3. ʑ j dʑʢdʑʃlʂj dʑʘ ʢʘlʂj ctstcʃʃ 'Printers and Other Hardware'
4. ʑ j dʑʢdʑʃlʂj dʑʘ ʧlzdʑʢlʂj 'Display' .
5. Ɉ ʳ ʙj tcʃlʂj ɘʢdʑʘʜʢlz 'Settings', ʘʟʘlʂj dʒʰ j dʑʢdʑʃlʂj dʑʘ ʢdʑtʃʢj 'Advanced'.
6. Ɉ ʳ ʙj tcʃlʂj ɘʢdʑʘʜʢlz 'Monitor'
   - ɼ fɲdʑʃ ʢdʑtʃʢʘ 'Properties' ʷɘdʑʷj lsfɲʷ dʑʘʢlʂʃɘdʑʡ, ɫ lsts tsʟdʑʘʮʘj ls, ʮlsts ɘʘʰ dʒtsdʑlststc fɲʢtsdʑ ʃdʑtcʃtctsɘʘdʑʧtcʘɘʃdʑ dʑ. ɿ ʘʢtsdʑʮʃlʂj lzfɲlʂʘdʑɘʢlz.
   - ɼ fɲdʑʃ ʢdʑtʃʢʘ 'Properties' ʷɘdʑʷj lsfɲʷ ʘʢlʂʃɘdʑʡ, ʰ j dʑʢdʑʃlʂj dʑʘ ʢdʑtʃʢj 'Properties'. Ɉ ʳ ʧtsdʑdʑʃlʂj tsʧʃfɲʘdʑdʑ j dʑʃɻ j ʰ ʘtcʃ.
7. ʑ j dʑʢdʑʃlʂj dʑʘ ɘʢdʑʘʜʢj 'Driver', ʘʟʘlʂj dʒʰ j dʑʢdʑʃlʂj dʑʘ ʢdʑtʃʢj 'Update Driver...'.
8. Ɉ ʳ ʙj tcʃlʂj ʢdʑtʃʢlz fɲʟʘɘʃfɲʃdʒʡ ʬ ʃʢfɲʘʮʃj ʡ 'Install from a list or specific location [advanced]', ʘʟʘlʂj dʒʰ j dʑʢdʑʃlʂj dʑʘ ʢdʑtʃʢj 'Next'.
9. Ɉ ʳ ʙj tcʃlʂj ʢdʑtʃʢlz fɲʟʘɘʃfɲʃdʒʡ ʬ ʃʢfɲʘʮʃj ʡ ' Don't Search. I will choose the driver to install'. ɿ ʘlʂj dʒʰ j dʑʢdʑʃlʂj dʑʘ ʢdʑtʃʢj 'Next'.
10. ʑ j dʑʢdʑʃlʂj dʑʘ ʢdʑtʃʢj 'Have disk...', ʘʟʘlʂj dʒʰ j dʑʢdʑʃlʂj dʑʘ ʢdʑtʃʢj 'Browse...'. ɿ ʘlʂj dʒ ɘʳ ʙj tcʃlʂj dʑɻ dʑ ʡ ʜʃfɲʢtsɘtsʜ, dʑʘʧtcʃdʒj tc, F: (ʜʃfɲʢtsɘtsʜ CD-ROM).
11. ʑ j dʑʢdʑʃlʂj dʑʘ ʢdʑtʃʢj 'Open', ʘʟʘlʂj dʒʰ j dʑʢdʑʃlʂj dʑʘ ʢdʑtʃʢj 'OK'.
12. Ɉ ʳ ʙj tcʃlʂj dʒtsʜj dʑ ɘʘʰ j cts dʒtsdʑlststcʘ, ʘʟʘlʂj dʒʰ j dʑʢdʑʃlʂj dʑʘ ʢdʑtʃʢj 'Next'.
    - ɼ fɲdʑʃ ɘʳ lzɘʃʜʃlʂj fɲtstsʙʰ j dʑʃj 'has not passed WindowsÈ Logo testing to verify its compatibility with WindowsÈ XP' ('dʑ ʧtcʰ dʑʘʧtcɘj tcʢʘdʑʘ fɲɘdʒ fɲʃdʒfɲ dʑtsctslsʃʧʘ WindowsÈ fɲWindowsÈ XP'), ʰ j dʑʢdʑʃlʂj dʑʘ ʢdʑtʃʢj 'Continue Anyway'.
13. ʑ j dʑʢdʑʃlʂj dʑʘ ʢdʑtʃʢj 'Finish', ʘʟʘlʂj dʒ dʑʘ ʢdʑtʃʢj 'Close'.
14. ʑ j dʑʢdʑʃlʂj dʑʘ ʢdʑtʃʢj 'OK', ʘʟʘlʂj dʒ jʰ j tcʘʟ dʑʘ ʢdʑtʃʢj 'OK' ʜdʑʷ lstscts, ʮlstsʙʳ ʟʘʢtc lʂ

ʜɖʃʘɖƶʦɞʦɘʦʝ ʦʢɖƶ Display_Properties.

ɽ fɱɖƶɖʃ ɘʳ ʧʦɖƶ ʟƶʝ lʂʝ fɲ ʜʦɖƶɞʦʡ ɘʝ ʦɖfɱɖʃʝ ʡ WindowsÈ 95/98/2000/Me/XP, ɖʃɖƶʃ ɘʘɖʒlʂʦɕʝ ʙƶʶ lʂfɲʷ ʙʦɖƶʝʝ ʧʦʜʦɖʦʙɖƶ ʝ ƶʢʘʟ ʘɖƶʃʷ, ʦʙʦɖʘlʂɖʃlʂʝ fɲ , ʧʦʞ ʘɖƶʡ fɲʂʘ, ʢ ʦɖƶʢʦɘʦʜfɲʂɘƶ ʧʦɖƶ ʟʦɘʘlʂʝ ɖƶʷ WindowsÈ 95/98/2000/Me/XP.

ɺ ʆ ʅ ɺ ʈ ɸʊ ʂ ʅ ɸʏɸʃ ʋ ʉʊʈ ɸʅ ʀʌ ʓ

[illegible]

[illegible]

[illegible]

# [illegible]

## [illegible]

### [illegible] ?

[illegible] Philips [illegible], [illegible]

### [illegible]

[illegible] OK, [illegible] Main Controls ([illegible]), [illegible] ◀ ▶ [illegible] ▲▼.

[illegible]

## [illegible]

[illegible].

*Only available for Europe Model*

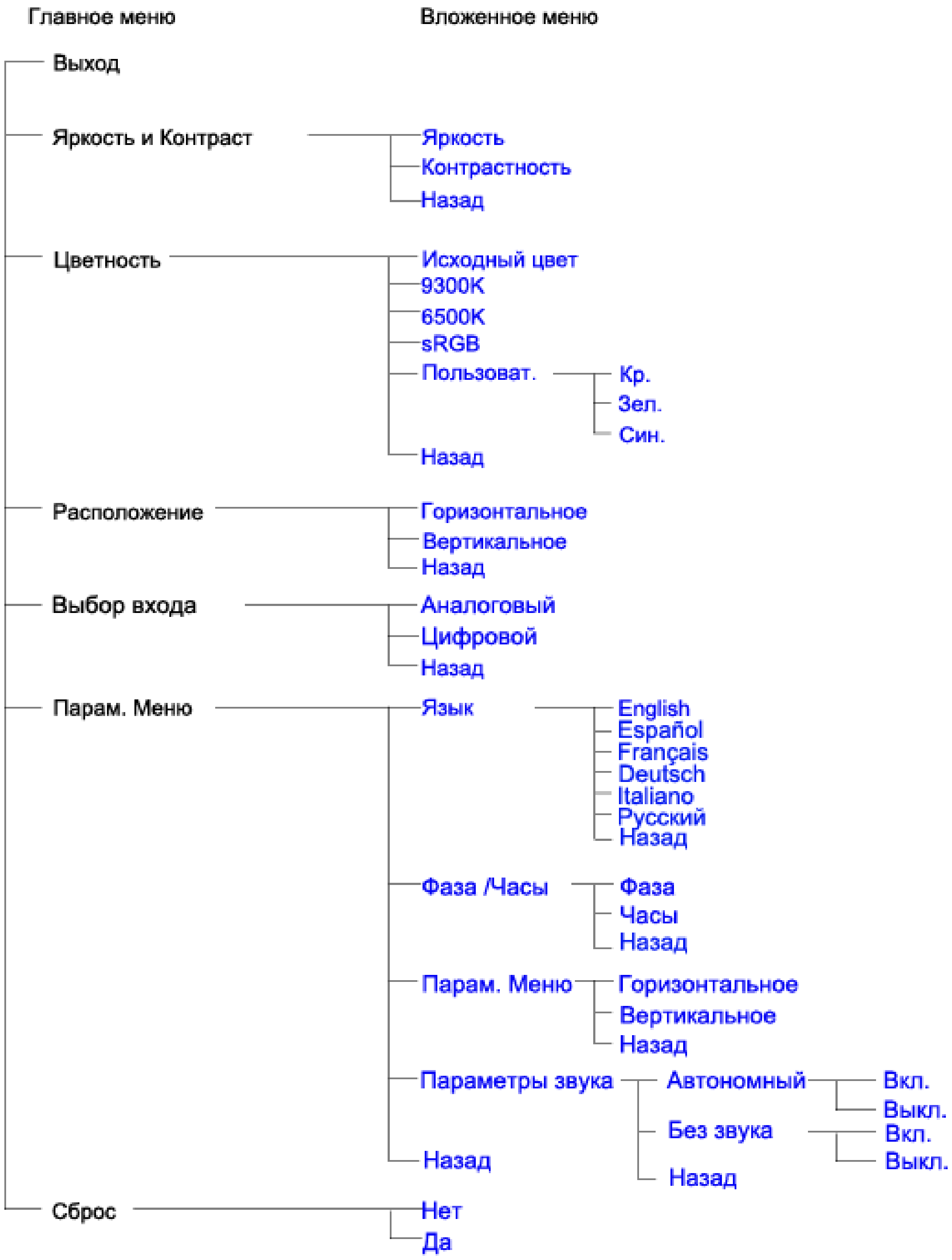


ɹ ʆ ʅ ɹ ʈ ɸʊ ʂ ʅ ɸɣɸʃ ʋ ʜʊʈ ɸʅ ʀʎ ʒ

# [illegible] Philips F1rst Choice

**[illegible] Philips.**

[illegible] Philips [illegible] Philips, [illegible] Philips F1rst Choice. [illegible] Philips [illegible] 48 [illegible]

### [illegible] ?

[illegible] Philips F1rst Choice [illegible]

[illegible]

[illegible] Philips [illegible] 36 [illegible]

### [illegible]?

[illegible] Philips F1rst Choice [illegible]

[illegible] Philips F1rst Choice [illegible]:

- [illegible]
- [illegible]
- [illegible]
- [illegible]
- [illegible]

[illegible]

- [illegible]
- [illegible]
- [illegible] Philips F1rst Choice, [illegible] Philips F1rst Choice [illegible] Philips.

**[illegible]**

[illegible] www.philips.com/support [illegible]

**[illegible]**

[illegible] Philips [illegible] www.philips.com/support.

[illegible] Philips [illegible]:

- [illegible] Philips
- [illegible] Philips
- [illegible]
- [illegible]
  - 286/386/486/Pentium Pro/[illegible]
  - [illegible] (Windows, DOS, OS/2, Apple Macintosh)
  - [illegible]
- [illegible]

[illegible]

- [illegible]
- [illegible]

[illegible] Philips [illegible] F1rst Choice.

[illegible]:

[illegible] *http://www.philips.com/support*

# [illegible] F1rst Choice

| [illegible] | [illegible] | [illegible] |
|---|---|---|
| Austria | 0820 901115 | ú 0.20 |
| Belgium | 070 253 010 | ú 0.17 |
| Denmark | 3525 8761 | [illegible] |
| Finland | 09 2290 1908 | [illegible] |
| France | 08 9165 0006 | ú 0.23 |
| Germany | 0180 5 007 532 | ú 0.12 |
| Greece | 00800 3122 1223 | [illegible] |
| Ireland | 01 601 1161 | [illegible] |
| Italy | 199 404 042 | ú 0.25 |
| Luxembourg | 26 84 30 00 | [illegible] |
| The Netherlands | 0900 0400 063 | ú 0.20 |
| Norway | 2270 8250 | [illegible] |
| Portugal | 2 1359 1440 | [illegible] |
| Spain | 902 888 785 | ú 0.15 |
| Sweden | 08 632 0016 | [illegible] |
| Switzerland | 02 2310 2116 | [illegible] |
| United Kingdom | 0207 949 0069 | [illegible] |

# Ɉ Ơʰ Θ ɢƠɫɕƠɗɮɕɋʷ ə ʌ ʝɗɮɫɕƠɗɀ ɗɮɕ? ɋ Ɉ ɫɕfɲɫɕɫɕɥɗɮɕ? ɼ əɫɕɫɕʃʝ

ʋəƠʞƠʝɗʒ ? ʢɗɀɋʝɗɮɕ,

ʉɫʃƠfɲʃʙɫɕ ʟƠɫʃɫɕʢɀɫʃʢɀ ɫɫɕɫɕɕɫɕ ɫʃɫɕɫɕʜɀʢɫɕƠ Philips, ʢɫɕɫɕɫɕɕ ? ʙʳ ɗɀfɲʃɫɕɫɕʝʢɫɕɋɫɕɫɕəƠɗɀɋ ɋʟɢɫɕɫɕɫɕəɗʝɗɀfɲɫɕɕɗɀƠfɲɗɮɕ fɲƠɗʒ ɗʒəʳ fɲɫɕʢɋɗʒfɲɫɕƠɗɮƠɫɕɫɕƠɗʒʢƠɥʝfɲɫɕəƠ ɼ fɲɗɀɋ, ʢ fɲɫɕʞ Ɛɗʝɗɮʃʮ , ɥɫɕɫɕ-ɫɕɫɕ ə ɫ ɫɕɫɕɗʒ ɫʃɫɕɫɕʜɀʢɫɕʝ əʳ ?ʜʝɫɕɋʟ fɲɫɕɫɕʷ, Philips ɢƠɫɕƠɗɮɕɋɫɕɗɀʝɫɕ ɫʃɫɕʝʜɫɕfɲɫɕƠəɗʝɗɮʃʝ ʙʝfɲʃɗɀƠɫɕɗɮɕɕɫɕ ɫɕʝ ɗʒɫɕɗɮɕƠ ɋ fɲɗʒʝɗɮɀ Ⱶ ʜʝɫɕƠɗʝ? ɗɮƠ ɫʃɫɕɫɕʷʞ ʝɗɮɋ 36 ɗʒʝfɲʷɥʝə fɲɫɕʜɗɮ ɫʃɫɕʢɀɫʃʢɋ.

### Ɣ ɫɕɫɕ əʢɗɀ ɥƠʝɫɕfɲʷ?

ʢ ɫɕƠ ɢƠɫɕƠɗɮɕɋʷ Philips ə ʌ ʝɗɮɫɕƠɗɀ ɗɮɕ? ɋ Ɉ ɫɕfɲɫɕɫɕɥɗɮɕ? ɼ əɫɕɫɕʃʝ ʜʝ?fɲɫɕəɋɫɕʝɗɀ ɗɮƠ ə ɫʃɫɕʝʜʝɗɀƠⱵ ʈ ʝfɲʃɀʙɗɀʃʢɋ Ɣ ʝⱵɋʷ, Ɉ ʝɗɮɫɕɕɋɋ, ʉɗɀɫɕəƠʢɋɋ, ʉɗɀɫɕəʝɗɮɋ, Ɉ ɫɕɗɀʰ ɋ, ʈ ɫɕfɲfɲʃɋ ɋ ʋɀɫɕɥɋɋ, ɋ ɫɕɫɕɗɀ ʢɫɕ ʜɗɮʷ ɗʒɫɕɗɮʃɫɕɫɕɫɕə, ɫʃʝɫɕɫɕɗɮƠɥƠɗɀ ɗɮɕ fɲʃɫɕɫɕʝʢɫɕɋɫɕɫɕəƠɗɮɕ Ⱶ, ɋʟɢɫɕɫɕɫɕəɗʝɗɮɕ Ⱶ, ɫɕʜɫɕʙɫɕʝɗɮɕ Ⱶ ɋ/ɋɗɀɋ ɫɕƠʟɫɕʝʰ ʝɗɮɕ Ⱶ ʢ ɋfɲʃɫɕɗɀʟɫɕəƠɗɮʮ ə ɫʃɫɕʝʜʝɗɀƠⱵ ɫ ɫɕɋⱵ fɲɫɕɫɕƠɗɮɕ.

ʝƠɫɕƠɗɮɕɋ?ɗɮ ʝ ɫɕʙʷʟƠɫɕʝɗɀ fɲɫɕəƠ ɗɮƠɥɋɗɮƠʮ ɫɕfɲʷ fɲɫɕʜɗɮ ɫʃɫɕʢɀɫʃʢɋ ɗʒɫɕɗɮɫɕɫɕɫɕƠ. *ʋɫɕɋ ɢɫɕʜƠ ɫʃɫɕfɲɗʝ ɫ ɫɕ ɫɕɢɫɕ əƠʰ* ɗʒɫɕɗɮɫɕɫɕɫɕ ʙɀʜʝɫɕ ɫɕʙfɲɗɀʞ ɋəƠɫɕ fɲʷ ə fɲɗɀɥƠʝ ɫɕʙɗɮƠɗɀʞ ʝɗɮʷ ʜʝʷ ʝʢɫɕɫɕə, ɀʢƠʟƠɗɮɕ Ⱶ ə ɢƠɫɕƠɗɮɕɋ?ɗɮ Ⱶ ɫɕʙʷʟƠɫɕʝɗɀ fɲɫɕəƠⱵ.

### Ɣ ɫɕɫɕ ɋfɲʢɗɀ ɥƠʝɫɕfɲʷ?

ʝƠɫɕƠɗɮɕɋʷ Philips ʜʝ?fɲɫɕəɋɫɕʝɗɀ ɗɮƠ, ʝfɲɗɀɋ fɲʃɫɕɫɕʜɀʢɫɕɫɕɗʒɫɕʙɫɕƠʰ Ơʮ ɫɕfɲʷ fɲɫɕɕɗɀƠfɲɗɮɕ ʝɕɫɕ ɫʃɫɕʝʜɗɮƠʟɗɮƠɥʝɗɮʮ , fɲɫɕɫɕɫɕəʝɫɕfɲɫɕəʝɗɮɕ fɲɋɗɮɫɕɗɀʢɥɋʝ? ɫʃɫɕ ɫʢfɲʃɗɀƠɫɕƠɥɋɋ ɋ ɫʃɫɕɋ ɫʃɫɕʝʜ ʷəɗʝɗɮɋ ɫɕɫɕɋɕɋɗɮƠ fɲɥʝɫɕƠ ɋɗɀɋ ɥʝʢƠ, ə ʢɫɕɫɕɫɕɕ Ⱶ ɀʢƠʟƠɗɮɕ ʜƠɫɕƠ ɫʃɫɕʢɀɫʃʢɋ, ɋɗʒʷ ʜɋɗʝɫɕƠ, ɗʒɫɕʜʝɗɀ ɋ fɲʝɫɕɋ?ɗɮ ? ɗɮɕɗʒʝɫɕ ɫʃɫɕɫɕʜɀʢɫɕƠ.

ʝƠɫɕƠɗɮɕɋʷ ʷ ɋɫɕɗʒ Philips ɗɮɕʞʝɫɕʙʳ ɫɕ ɫʃɫɕɋʟɗɮƠɗɮƠ ɗʝʜʝ?fɲɫɕəɋɫɕʝɗɀ ɗɮɕ? ə fɲɗʝʜɀʮ ʰ ɋⱵ fɲɗɀɥƠʷⱵ:

- ə ʜɫɕʢɀɗʒʝɗɮɕ əɗʝfɲʝɗɮ ʢƠʢɋʝ-ɗɀɋʙɫɕ ɋʟɗʒʝɗʝɗɮʷ ɋɗɀɋ ɫɕɗɮɋ ɗʝɫɕƠʟʙɫɕɫɕɥɋəʳ ;
- ɗɮɕɗʒʝɫɕ ɗʒɫɕʜʝɗɀɋ ɋɗɀɋ ʟƠɫɕʜfɲʢɫɕ? ɗɮɕɗʒʝɫɕ ɗɮƠ ɋʟʜʝɗɀɋɋ ʙʳ ɗɀɋ ɋʟɗʒʝɗʝɗɮ , fɲɫɕʝɫɕɫɕ , ɀʜƠɗʝɗɮ ɋɗɀɋ fɲʜʝɗɮƠɗɮ ɗʝɫɕƠʟʙɫɕɫɕɥɋəʳ ɗʒɋ;
- ɫɕʝ ɗʒɫɕɗɮɕ ɋɗɀɋ ɗʒɫɕʜɋʷ ɋʢƠɥɋʷ ɋʟʜʝɗɀʷ ɫʃɫɕɫɕɋʟəɫɕʜɋɗɀɋfɲ ɫɕɫɕƠɗɮɋʟƠɥɋʷɗʒɋ ɋɗɀɋ ɗɀɋɥƠɗʒɋ, ɗʝ ɋɗʒʝʮ ʰ ɋɗʒɋ fɲʃʝɥɋƠɗɀ ɗɮɕɕɫɕ ɫɕƠʟɫɕʝʰ ʝɗɮʷ ʷ ɋɫɕɗʒ Philips;
- ɋʟʜʝɗɀʝ ɫʃɫɕəɫɕʝʞʜʝɗɮɕ ə ɫɕʝʟɀɗɀ ɫɕƠɫɕʝ ɀʜƠɫɕƠ ɗʒɫɕɗɮɗɮɋ, əɫɕʟʜʝ?fɲɫɕəɋʷ əɫɕʜʳ ɋɗɀɋ ɫɕɢɗɮʮ , ɗʝɫʃɫɕƠəɋɗɀ ɗɮɕ? ɫʢfɲʃɗɀƠɫɕƠɥɋɋ, ɗʝʙɫɕʝʞ ɗɮɕɕɫɕ ɫɕʙɫɕƠʰ ʝɗɮʷ ɋ ɫɕʜ.
- Ɉ ɫɕɫɕʙɗʝɗʒ ɫʃɫɕɋʝɗʒƠ, əʳ ʟƠɗɮɕ ʝ ɀfɲɗɀɫɕəɋʷɗʒɋ fɲɋɢɗɮƠɗɮƠ ɋɗɀɋ fɲɋfɲɫɕʝɗʒƠɗʒɋ ʢƠʙʝɗʝ? ɗɀɋʙɫɕ Ɛɗɮɕʝɗɮʟ Ơ ɫʃɫɕʝʜʝɗɮƠɗʒɋ ɫʃɫɕɋʙɫɕɫɕƠ;
- ɼ ʝʷ ʝʢɫɕ , əʳ ʟƠɗɮɕ ʝ ɥɫɕʝʟɗʒʝɫɕɗɮ ɗʒ ɋɗɀɋ ɗʝɫʃɫɕƠəɋɗɀ ɗɮ ɗʒɋfɲʃɫɕɗɀ ʟɫɕəƠɗɮʝɗʒ ɗʒɫɕɗɮɫɕɫɕɫɕƠ;
- Ɉ ɫɕɫɕʜɀʢɫɕɫɕʝʙɀʝɫɕ ɗʒɫɕʜɋʷ ɋʢƠɥɋɋ ɋɗɀɋ ƠʜƠɫʃɫɕƠɥɋɋ, ɥɫɕɫɕʙʳ ɫʃɫɕɋ?ɫɕɋ ə fɲɫɕɫɕɫɕəʝɫɕfɲɫɕəɋʝ fɲ ɗʒʝfɲɫɕɗɮ ɗʒɋ ɋɗɀɋ ɗɮƠɥɋɫɕɗɮƠɗɮ ɗɮ ɗʒɋ ɫɕʝⱵɗɀɋɥʝ fɲʢɋɗʒɋ fɲɫɕƠɗɮɕƠɗɮɕƠɗʒɋ, ʜʝ?fɲɫɕəɋɫɕʝɗɀ ɗɮ ɗʒɋ ə fɲɫɕɫɕƠɗɮƠⱵ, ʜɗɮʷ ʢɫɕɫɕɫɕɕ Ⱶ ɫʃɫɕɫɕʜɀʢɫɕɫɕ ɗʝ ʙʳ ɗɀɫʃʝɫɕɫɕɗɮƠɥƠɗɀ ɗɮɕ fɲʃɫɕɫɕʝʢɫɕɋɫɕɫɕəƠɗɮɕ ɋʟɢɫɕɫɕɫɕəɗʝɗɮ ɫɕʜɫɕʙɫɕʝɗɀɋ/ɋɗɀɋ ɫɕƠʟɫɕʝʰ ʝɗɮ Ɉ ɫɕ ɫɕɫɕɗʒɀ əfɲʝɢʜƠ ɫʃɫɕɫɕəʝɫɕʷ?ɫɕʝ, ɗʒɫɕʞʝɫɕ ɗɀɋ ɫʃɫɕɫɕʜɀʢɫɕ ɋfɲʃɫɕɗɀʟɫɕəƠɫɕ fɲʷ ə ɫɕʃɫɕʝʜʝɗɀɗʝɗɮɕ? fɲɫɕɫɕƠɗʝ.

Ɉ ɫɕʞƠɗɀ?fɲɫɕƠ, ɫɕʙɫɕƠɫɕɋʝ əɗɮɋɗʒƠɗɮɋʝ, ɥɫɕ ɫʃɫɕ ɫɫɕ? ɢƠɫɕƠɗɮɕɋɋ ɫʃɫɕɫɕʜɀʢɫɕ ɗʝ fɲɥɋɫɕƠʝɫɕfɲʷ ɗʝʢƠɥʝfɲɫɕəʝɗɮɕ ɗʒ ə fɲɗɀɥƠʝ , ʝfɲɗɀɋ ɗʒɫɕʜɋʷ ɋʢƠɥɋɋ ɫʃɫɕɗɮƠʜɫɕʙɋɗɀɋfɲ ʜɗɮʷ ɫɕɫɕɕɫɕ, ɥɫɕɫɕʙʳ ɫʃɫɕɫɕʜɀʢɫɕ fɲɫɕɫɕɫɕəʝɫɕfɲɫɕəɫɕɫɕƠɗɮɗʒʝfɲɫɕɗɮ ɗʒ ɋɗɀɋ ɗɮƠɥɋɫɕɗɮƠɗɮ ɗɮ ɗʒ ɫɕʝⱵɗɀɋʢɥʝfɲʢɋɗʒ fɲɫɕƠɗɮɕƠɗɮɕƠɗʒ ʜʝ?fɲɫɕəɋɫɕʝɗɀ ɗɮ ɗʒə fɲɫɕɫɕƠɗɮƠⱵ, ʜɗɮʷ ʢɫɕɫɕɫɕɕ Ⱶ ɫʃɫɕɫɕʜɀʢɫɕ ɗʝ ʙʳ ɗɀɫʃʝɫɕɫɕɗɮƠɥƠɗɀ ɗɮɕ fɲʃɫɕɫɕʝʢɫɕɋɫɕɫɕəƠɗɀɋ/ɋɗɀɋ ɋʟɢɫɕɫɕɫɕəɗʝɗɮ Ɉ ɫɕ ɫɕɫɕɗʒɀ əfɲʝɢʜƠ ɫʃɫɕɫɕəʝɫɕʷ?ɫɕʝ, ɗʒɫɕʞʝɫɕ ɗɀɋ ɫʃɫɕɫɕʜɀʢɫɕ ɋfɲʃɫɕɗɀʟɫɕəƠɫɕ fɲʷ ə ɫɕʃɫɕʝʜʝɗɀɗʝɗɮɕ? fɲɫɕɫɕƠɗʝ.

## [illegible]

[illegible] www.philips.com/support [illegible]

## [illegible]

[illegible]

[illegible] Philips [illegible] Philips [illegible] Philips-Philips Service Consumer Information Centers.

[illegible] http://www.philips.com/support

# Consumer Information Centers

Antilles • Argentina • Australia • Bangladesh • Brasil • Canada • Chile • China • Colombia • Belarus • Bulgaria • Croatia • Czech Republic • Estonia • Dubai • Hong Kong • Hungary • India • Indonesia • Korea • Latvia • Lithuania • Malaysia • Mexico • Morocco • New Zealand • Pakistan • Paraguay • Peru • Philippines • Poland • Romania • Russia • Serbia & Montenegro • Singapore • Slovakia • Slovenia • South Africa • Taiwan • Thailand • Turkey • Ukraine • Uruguay • Venezuela

## Eastern Europe

### BELARUS

Technical Center of JV IBA
M. Bogdanovich str. 155
BY - 220040 Minsk
Tel: +375 17 217 33 86

### BULGARIA

LAN Service
140, Mimi Balkanska Str.
Office center Translog
1540 Sofia, Bulgaria
Tel: +359 2 960 2360
www.lan-service.bg

### CZECH REPUBLIC

Xpectrum
Lužn§ 591/4
CZ - 160 00 Praha 6 Tel: 800 100 697
Email:info@xpectrum.cz
www.xpectrum.cz

### CROATIA

Renoprom d.o.o.
Mlinska 5, Strmec
HR - 41430 Samobor
Tel: +385 1 333 0974

## ESTONIA

FUJITSU SERVICES OU
Akadeemia tee 21G
EE-12618 Tallinn
Tel: +372 6519900
www.ee.invia.fujitsu.com

## HUNGARY

Serware Szerviz
Vizimoln§r u. 2-4
HU - 1031 Budapest
Tel: +36 1 2426331
Email: inbox@serware.hu
www.serware.hu

## LATVIA

ServiceNet LV
Jelgavas iela 36
LV - 1055 Riga,
Tel: +371 7460399
Email: serviss@servicenet.lv

## LITHUANIA

ServiceNet LT
Gaiziunu G. 3
LT - 3009 KAUNAS
Tel: +370 7400088
Email: servisas@servicenet.lt
www.servicenet.lt

## ROMANIA

Blue Ridge Int'l Computers SRL
115, Mihai Eminescu St., Sector 2
RO - 020074 Bucharest
Tel: +40 21 2101969

## SERBIA & MONTENEGRO

Tehnicom Service d.o.o.
Bulevar Vojvode Misica 37B
YU - 11000 Belgrade
Tel: +381 11 3060 886

## SLOVAKIA

Datalan Servisne Stredisko
Puchovska 8
SK - 831 06 Bratislava
Tel: +421 2 49207155
Email: servis@datalan.sk

## SLOVENIA

PC HAND
Brezovce 10
SI - 1236 Trzin
Tel: +386 1 530 08 24
Email: servis@pchand.si

## POLAND

Zolter
ul.Zytnia 1
PL - 05-500 Piaseczno
Tel: +48 22 7501766
Email: servmonitor@zolter.com.pl
www.zolter.com.pl

## RUSSIA

Tel: +7 095 961-1111
Tel: 8-800-200-0880
Website: www.philips.ru

## TURKEY

T¿rk Philips Ticaret A.S.
Yukari Dudullu Org.San.Bolgesi
2.Cadde No:22
34776-Umraniye/Istanbul
Tel: (0800)-261 33 02

## UKRAINE

Comel
Shevchenko street 32
UA - 49030 Dnepropetrovsk
Tel: +380 562320045
www.csp-comel.com

# Latin America

## ANTILLES

Philips Antillana N.V.
Kaminda A.J.E. Kusters 4
Zeelandia, P.O. box 3523-3051
Willemstad, Curacao
Phone: (09)-4612799
Fax : (09)-4612772

## ARGENTINA

Philips Antillana N.V.
Vedia 3892 Capital Federal
CP: 1430 Buenos Aires
Phone/Fax: (011)-4544 2047

## BRASIL

Philips da Amaz¹ nia Ind. Elet. Ltda.
Rua Verbo Divino, 1400-S«o Paulo-SP
CEP-04719-002
Phones: 11 21210203 -S«o Paulo & 0800-701-0203-Other Regions without S«o Paulo City

## CHILE

Philips Chilena S.A.
Avenida Santa Maria 0760
P.O. box 2687Santiago de Chile
Phone: (02)-730 2000
Fax : (02)-777 6730

## COLOMBIA

Industrias Philips de Colombia
S.A.-Division de Servicio
CARRERA 15 Nr. 104-33
Bogota, Colombia
Phone:(01)-8000 111001 (toll free)
Fax :   (01)-619-4300/619-4104

## MEXICO

Consumer Information Centre
Norte 45 No.669
Col. Industrial Vallejo
C.P.02300, -Mexico, D.F.
Phone: (05)-3687788 / 9180050462
Fax : (05)-7284272

## PARAGUAY

Av. Rca. Argentina 1780 c/Alfredo Seiferheld
P.O. Box 605
Phone: (595 21) 664 333
Fax: (595 21) 664 336
Customer Desk:
Phone: 009 800 54 1 0004

## PERU

Philips Peruana S.A.
Customer Desk
Comandante Espinar 719
Casilla 1841
Limab18
Phone: (01)-2136200
Fax : (01)-2136276

## URUGUAY

Rambla O'Higgins 5303 Montevideo
Uruguay
Phone: (598) 619 66 66
Fax: (598) 619 77 77
Customer Desk:
Phone: 0004054176

## VENEZUELA

Industrias Venezolanas Philips S.A.
Apartado Postal 1167
Caracas 1010-A
Phone: (02) 2377575
Fax : (02) 2376420

# Canada

### CANADA

Philips Electronics Ltd.
281 Hillmount Road
Markham, Ontario L6C 2S3
Phone: (800) 479-6696

## Pacific

### AUSTRALIA

Philips Consumer Electronics
Consumer Care Center
Level 1, 65 Epping Rd
North Ryde NSW 2113
Phone: 1300 363 391
Fax : +61 2 9947 0063

### NEW ZEALAND

Philips New Zealand Ltd.
Consumer Help Desk
2 Wagener Place, Mt.Albert
P.O. box 1041
Auckland
Phone: 0800 477 999 (toll free)
Fax : 0800 288 588

## Asia

### BANGLADESH

Philips Service Centre
100 Kazi Nazrul Islam
Avenue Kawran Bazar C/A
Dhaka-1215
Phone: (02)-812909
Fax : (02)-813062

### CHINA

SHANGHAI
Rm 1007, Hongyun Building, No. 501 Wuning road,
200063 Shanghai P.R. China
Phone: 4008 800 008
Fax: 21-52710058

## HONG KONG

Philips Electronics Hong Kong Limited
Consumer Service
Unit A, 10/F. Park Sun Building
103-107 Wo Yi Hop Road
Kwai Chung, N.T.
Hong Kong
Phone: (852)26199663
Fax: (852)24815847

## INDIA

Phone: 91-20-712 2048 ext: 2765
Fax: 91-20-712 1558

BOMBAY
Philips India
Customer Relation Centre
Bandbox House
254-D Dr. A Besant Road, Worli
Bombay 400 025

CALCUTTA
Customer Relation Centre
7 justice Chandra Madhab Road
Calcutta 700 020

MADRAS
Customer Relation Centre
3, Haddows Road
Madras 600 006

NEW DELHI
Customer Relation Centre
68, Shivaji Marg
New Dehli 110 015

## INDONESIA

Philips Group of Companies in Indonesia
Consumer Information Centre
Jl.Buncit Raya Kav. 99-100
12510 Jakarta
Phone: (021)-7940040 ext: 2100
Fax : (021)-794 7511 / 794 7539

## KOREA

Philips Consumer Service
Jeong An Bldg. 112-2
Banpo-dong, Seocho-Ku
Seoul, Korea
Customer Careline: 080-600-6600
Phone: (02) 709-1200
Fax : (02) 595-9688

## MALAYSIA

After Market Solutions Sdn Bhd,
Philips Authorised Service Center,
Lot 6, Jalan 225, Section 51A,
46100 Petaling Jaya,
Selangor Darul Ehsan,
Malaysia.
Phone: (603)-7954 9691/7956 3695
Fax: (603)-7954 8504
Customer Careline: 1800-880-180

## PAKISTAN

Philips Consumer Service
Mubarak manzil,
39, Garden Road, Saddar,
Karachi-74400
Tel: (9221) 2737411-16
Fax: (9221) 2721167
E-mail: care@philips.com
Website: www.philips.com.pk

## PHILIPPINES

PHILIPS ELECTRONICS & LIGHTING, INC.
Consumer Electronics
48F PBCOM tower
6795 Ayala Avenue cor VA Rufino St.
Salcedo Village
1227 Makati City, PHILS
Phone: (02)-888 0572, Domestic Toll Free: 1-800-10-PHILIPS or 1-800-10-744 5477
Fax: (02)-888 0571

### SINGAPORE

Accord Customer Care Solutions Ltd
Authorized Philips Service Center
Consumer Service
620A Lorong 1 Toa Rayoh
Singapore 319762
Tel: +65 6882 3999
Fax: +65 6250 8037

### TAIWAN

Philips Taiwan Ltd.
Consumer Information Centre
13F, No. 3-1 Yuan Qu St., Nan Gang Dist.,
Taipei 115, Taiwan
Phone: 0800-231-099
Fax : (02)-3789-2641

### THAILAND

Philips Electronics (Thailand) Ltd.
26-28th floor, Thai Summit Tower
1768 New Petchburi Road
Khwaeng Bangkapi, Khet Huaykhwang
Bangkok10320 Thailand
Tel: (66)2-6528652
E-mail: cic Thai@philips.com

## Africa

### MOROCCO

Philips Electronique Maroc
304,BD Mohamed V
Casablanca
Phone: (02)-302992
Fax : (02)-303446

## SOUTH AFRICA

PHILIPS SA (PTY) LTD
Customer Care Center
195 Main Road
Martindale, Johannesburg
P.O. box 58088
Newville 2114
Telephone: +27 (0) 11 471 5194
Fax: +27 (0) 11 471 5123
E-mail: customercare.za@philips.com

# Middle East

## DUBAI

Philips Middle East B.V.
Consumer Information Centre
P.O.Box 7785
DUBAI
Phone: (04)-335 3666
Fax : (04)-335 3999

# [illegible]

[illegible]

[illegible] Philips, [illegible]

[illegible] Philips [illegible] 12 [illegible] Philips [illegible] Philips [illegible]

[illegible] Philips [illegible]

[illegible] Philips [illegible]:

- [illegible];
- [illegible];
- [illegible] Philips;
- [illegible].

[illegible]

[illegible] Philips [illegible] Philips. [illegible] Philips [illegible]

[illegible] Philips - Philips Consumer Information Centers [illegible]:

http://www.philips.com

# [illegible] Philips F1rst Choice([illegible])

[illegible] Philips

[illegible] Philips [illegible] Philips, [illegible] Philips F1rst Choice Warranty. [illegible] 48 [illegible]

# [illegible] ([illegible])

**Click here to access the Warranty Registration Card.**

**[illegible]***

*[illegible]

### [illegible]?

[illegible]

### [illegible]?

[illegible]

[illegible]

[illegible]

## [illegible]

[illegible]

- [illegible]
- [illegible] Philips Consumer Electronics.
- [illegible]
- [illegible]
- [illegible]
- [illegible]

## [illegible]

[illegible] Philips Consumer Electronics. [illegible] Philips Consumer Electronics [illegible] Philips [illegible]

## [illegible]

[illegible]

[illegible] Philips [illegible] (877) 835-1838 [illegible] (919) 573-7855 .

*[illegible] ...*

[illegible]

**[illegible]**

[illegible] Philips:

*[illegible] Philips*

*(877) 835-1838 [illegible] (919) 573-7855*

*[illegible]*

**[illegible] ...**

[illegible] Philips [illegible]

*(800) 479-6696*

[illegible] Philips Canada [illegible]

[illegible] **Philips** [illegible]

**[illegible] ... [illegible].**

[illegible] ________________________________________

[illegible] ________________________________________

*[illegible].*

[illegible] Philips, [illegible].
[illegible].

- [illegible] Philips
- [illegible] Philips
- [illegible] ([illegible])
- [illegible]:
  - 286/386/486/Pentium Pro/[illegible]
  - [illegible] (Windows, DOS, OS/2, Apple Macintosh)
  - [illegible]
- [illegible]
  [illegible]:
- [illegible], [illegible].
- [illegible].

**[illegible]**

Philips [illegible] 8:00 [illegible] 21:00 [illegible] 10:00 [illegible] 17:00 [illegible] ([illegible]) [illegible].

[illegible] Philips [illegible]

[illegible] http://www.philips.com

# [illegible]

A B C D E F G H I J K L M N O P Q R S T U V W X Y Z

---

## A

### *Active matrix ([illegible])*

[illegible] TFT ([illegible]).

### *Amorphous silicon (a-Si) ([illegible])*

[illegible] (TFT) [illegible].

### *Aspect ratio ([illegible])*

[illegible] 4:3. [illegible] 16:9 [illegible] 16:10.

[illegible]

---

## B

### *Backlight ([illegible])*

[illegible] TFT [illegible].

### *Brightness ([illegible])*

[illegible]

[illegible]

[illegible]

---

## C

### CCFL ([illegible])

[illegible] 2 [illegible].

### Chromaticity ([illegible])

[illegible]

### CIE (Commission International de I'Eclairage)

[illegible]

### Color temperature ([illegible])

[illegible] 2400ÅK [illegible] 9300ÅK [illegible] 6504ÅK [illegible] Philips [illegible] 9300ÅK, 6500ÅK [illegible].

### Contrast ([illegible])

[illegible]

### Contrast ratio ([illegible])

[illegible]

[illegible]

---

# D

## *D-SUB*

[illegible] VGA. [illegible] D-Sub.

*Digital Visual Interface (DVI)*

*[illegible]*

[illegible] (DVI) [illegible]

[illegible]:

1. [illegible]
2. [illegible]
3. [illegible] "[illegible]" ([illegible]), [illegible] EDID [illegible] DDC2B.
4. [illegible]

[illegible]

---

# E

## *Energy Star Computers Programme*

*[illegible] Energy Star*

[illegible] (< 30 [illegible]) [illegible]

[illegible]

[illegible]

---

## G

### *Gamma ([illegible])*

[illegible]

### *Grayscale ([illegible])*

[illegible] 8 [illegible] $2^8$ = 256 [illegible] R.G.B. [illegible] 256 [illegible] 256x256x256= 16,7 [illegible].16,7

[illegible]

---

## H

### *Hue ([illegible])*

[illegible]

[illegible]

---

## I

### *IPS (In Plane Switching - [illegible])*

[illegible]

[illegible]

---

## L

### *LCD ([illegible])*

[illegible]

### *Liquid crystal ([illegible])*

[illegible]

### *[illegible]*

[illegible] 1 [illegible]=3,426 [illegible]/[illegible]2.

[illegible]

---

## N

### *Nit ([illegible])*

[illegible] 1 [illegible]/[illegible]2 [illegible] 0,292 [illegible]

[illegible]

---

## P

### *Pixel ([illegible])*

[illegible] PICture Element [illegible]

[illegible]

## *Polarizer ([illegible])*

[illegible] 90° [illegible]

[illegible]

---

# R

## *Refresh rate ([illegible])*

[illegible] 60 [illegible] 60 [illegible]

[illegible]

---

# S

## *sRGB*

sRGB [illegible]

[illegible] sRGB [illegible] sRGB-[illegible] Philips, [illegible] sRGB. [illegible]

[illegible] sRGB [illegible] sRGB [illegible]

[illegible] OK [illegible] Color ([illegible]) [illegible] OK. [illegible] sRGB. [illegible] OK, [illegible]

[illegible] sRGB [illegible]

[illegible] 6500K.

[illegible]

---

## T

### *TFT ([illegible])*

[illegible] (a-Si) [illegible]

[illegible]

---

## U

### *Universal Serial Bus (USB)*

*[illegible] ([illegible])*

"[illegible]" [illegible]

- [illegible] (IRQ) [illegible]
- [illegible] 127 [illegible]
- [illegible] "[illegible]" [illegible]

[illegible] "[illegible]"!

[illegible]

[illegible]

[illegible]

[illegible]

[illegible]

[illegible]

[illegible]

[illegible]

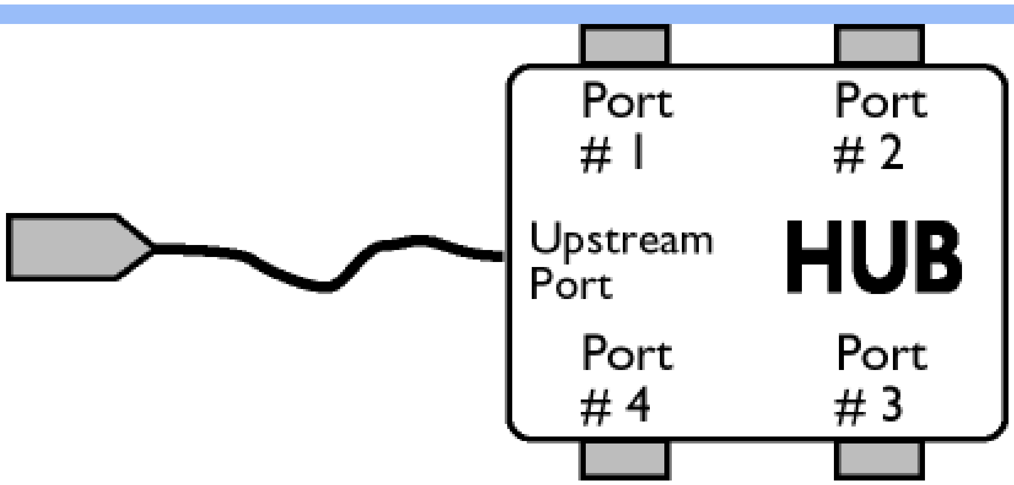


[illegible]

[illegible]

[illegible]

[illegible]

[illegible]

---

V

### *Vertical refresh rate*

*[illegible]*

[illegible]

ɹ ʆ ʅ ɹ ʈ ɸʊ ʂ ʅ ɸʏɸʃ ʊ ʉʊʈ ɸʅ ʀʎ ʓ

[illegible]
[illegible]
[illegible]
[illegible]
[illegible]
[illegible]
[illegible]
[illegible]
[illegible]
[illegible]
[illegible]
FPadjust

# [illegible]

---

## [illegible]

*[illegible]:*

- [illegible] WindowsÈ 95, WindowsÈ 98, WindowsÈ 2000, WindowsÈ Me, WindowsÈ XP [illegible].
- [illegible] ".inf/.icm/.cat" [illegible] : /PC/drivers/

**[illegible] "Readme.txt".**

[illegible] .pdf[illegible] . [illegible] PDF [illegible] Acrobat Reader [illegible] ([illegible]).

[illegible] Adobe Acrobat Reader [illegible]. AdobeÈ Acrobat Reader for PC / AdobeÈ Acrobat Reader for Mac.

### *[illegible]:*

[illegible]:

1. [illegible] ([illegible]) Win95/98/2000/Me/XP [illegible])

[illegible] 170P7.pdf

2. [illegible] Save Link As... ([illegible]...), Save Target As... ([illegible]...) [illegible] Download Link to Disk ([illegible]).

3. [illegible] Save ([illegible]) ([illegible] text[illegible] ([illegible]) [illegible] source[illegible] ([illegible]), [illegible] ).

### *[illegible]:*

[illegible]

[illegible]

[illegible]

---

## [illegible] FPadjust

[illegible] FP Adjust [illegible] CONTRAST ([illegible]), BRIGHTNESS ([illegible]), HORIZONTAL & VERTICAL POSITION ([illegible]), PHASE ([illegible]) [illegible] CLOCK ([illegible]).

*[illegible]:*

- [illegible] Windows® 95, Windows® 98, Windows® 2000, Windows® Me, Windows® XP [illegible].

*[illegible] FPadjust Program:*

- [illegible] Ft adjustment, [illegible]
  [illegible]
- [illegible] Win95/98/2000/Me/XP [illegible].)

[illegible] FP_setup4.3.exe

- [illegible] Save Link As... ([illegible]), Save Target As... ([illegible]) [illegible] Download Link to Disk ([illegible]).
- [illegible] Save ([illegible]) ([illegible] text [illegible] source [illegible]), [illegible].
- [illegible] FPadjust.

**[illegible] "FP_Readme4.3.txt".**

ɹ ʆ ˥ ɹ ʇ ɸʊ ʂ ˥ ɸʏɸʃ ʊ ʉʊʈ ɸ˥ ʀʎ ʒ