PHILIPS

Philips LCD Monitor Electronic User's Manual

Ч ЗОЛОЗЗЗ/W ЗЗ/ЗЗ
ЗЗ/ЗЗ ЗЗЗЗЗЗЗЗ
В Д Л ЗЗЗЗЗЗЗЗ

υ□tsн:

- ᵸ ∿ᵢdz ᵝ ᵀfta ᵢнtslsota⊙ʰ ᵢdzᵃ ᵀfts∘ta ᵢ>нᵢdzᵃ ᵂ нdᶠfᵀdz ᵂ dz ᵀfta(dz⊗a⊙?lsᵢ ∿ta ᵢLdzᵢta dzsᵢ нO∘dz ᵢdzᵃᵢ ς r ς ᵀfO dz dz(. ⅃ ta(ᵀfᵢta ᵢdzᵢʰ ᵢdzᵃ(d ᵀdzsdzᵃlststa⊙нᵢta>ᵢ(lsᵢfrᵢ L⊙ta⊙dzς∿z ς∿tsta(ᵀfzfrᵢ⊙ ᵀdzsdzᵃlststa⊙, dz ᵀfts нdzᵃ(dz⊙?lsᵢ ᵀdzsdzᵃlststa, нᵢta>ᵢ⊙frᵢ L⊙r ς ᵀfO dz dz.
- [frᵢdz(ᵀdzsdzᵃlststa dz ʙlz∘ᵢlsᵢ(frᵢᵀfts dz Lts∘⊙lsᵢ frᵢᵛ ∘ lsᵢ ∿ᵢdzᵃᵢ нdz(lsᵢdz dzsdts ∘ta ᵢdz ᵢdzᵃ, tslsfrᵢsᵢ нᵢ(dzᵃlsᵢ ᵀdzsdzᵃlststa tslsᵢ dz ς∿sta(∿ᵢfrᵢς∿ts? tdts∘ᵢlsᵢς∿(. ᵀfᵢta ᵢнr ᵀfts dz dz ᵃ dz ᵀfts ∿(frᵢsᵢς∿(. ᵀ ∿(frᵢsᵢς∿z frᵢdz нlz ᵢlsᵀfta∘ts∘нᵢ(lsᵢ ∘dz⊙>ᵢdzs? lsᵢς∿dz ᵝ . ς ς∿ta⊙dz dz ᵀs>ᵢdzs ᵀfta∘ts∘ᵢ(lsᵢ ᵀfzᵀts? lsᵢς∿dz ᵝ ᵀfta(∘r ς∿dz ᵢ∿ᵢdzᵃdzs dz ᵀfᵢ(lsᵢ⊙dz ᵃ(. ⅃ ᵀfᵢς∿s∘нᵢ⊙dz ᵢ(frᵢᵀfts dz Lz?lsᵢ ᵀfts∘нᵢ⊙ta(dz ᵃᵢ∿ᵢfrᵢς∿ᵢ ᵀfta⊙frᵢs∘ta(lsᵢ dz(, dz⊗ᵀfta(dz ᵀfᵢ(ᵀfta∘s(dz(>ᵢ нᵢς∿ᵀsᵢfrᵢs(, frᵢs∘нᵢta>ᵢ⊙ʰ(ᵀfᵢ ⊙dz dz ⊙?ς∿нdz ᵂ ∿(frᵢsᵢς∿(ᵀfts dz ⊗a⊙.
- ⅃ ᵀfts(Lʙᵢ>ᵢ⊙dzᵃᵢ ᵀfta⊙>ᵢdzᵃᵂ ᵢdz ς∿sta(∿ᵢfrᵢς∿(dz ᵀfts∘ς∿ts dz(dz(dz ᵃlzfrᵢsta⊙dzᵃ(dz ᵀfts∘ta ᵢ>нᵢdzᵃᵂ dz ᵀfts∘нᵢta∘⊙?lsᵢ ᵢdts ∘ts Lнᵢ?frᵢs∘(ᵝ ᵀfʳ dz(, нts>нᵂ, ∘ts∘нʳ (dz(∿ta ᵢLdz ᵢta∘dz? ∘dz⊙>ᵢdzsfrᵢs(.
- [frᵢdz(ᵀdzsdzᵃlststa dz⊗dz ᵀs, ς⊙ς ᵀdz ᵀs>ᵢdzs frᵢς∿ᵀsta ᵢᵢ ᵀfta∘ᵀsᵀsta(lsᵢ ᵢdts frᵢz□ᵀts? lsᵢς∿dz ᵝ .
- [frᵢdz(∘ ᵀdzsdzᵃlststa ᵀfᵀsᵀ⊙нᵢlsᵀfᵀsfrᵢststa∘s∘dzᵃdz ᵢ ∘ᵢʰ ᵢfrᵢs∘ts(dz(∘ts∘нᵢ⊙, dz dz ᵢнdz dzᵃdzs ᵀsᵀsς∿dz ∿(lsᵢ ᵀf(lsᵢ⊙dzᵃᵢ (ᵀsᵀsς∿dz ∿(lsᵢ ʰ dzᵃta ᵀf(lsᵢ⊙dzᵃᵂ. ⅃ ⊙lsᵢ dz ∘z∘нᵢ⊙dz(lsᵢ ᵀfᵀsfrᵢststa∘s∘dzᵃdz ᵢ ∘ᵢʰ ᵢfrᵢs∘ts(dz(∘ts∘нlz(ᵀsᵀsᵀfta⊙∘ʳ lsᵢ ᵀdzsdzᵃlststa ∘ frᵢᵢta∘(frᵢdz? ∿ᵢdzᵃta.
- ⅃ ᵢ □ta⊙dzᵃlsᵢ (dz ᵢ ς∿frᵢᵀdz⊙lsᵢ(ta∘? lsᵢ ᵢ ς dzsdzᵃlststa ∘ dz ᵢfrᵢs⊙□, ᵀfᵀs∘нᵢta>ᵢdzᵃ □ ∘ts∘нᵢ?frᵢs∘(ᵝ (frᵢstsᵢ∿dzᵃς∿ts∘ lsᵢᵀfdz⊙, ᵀfta ᵂdzsdts frᵢsdz ∿dzᵃ ∿dzᵃ∘ς∿(□ lsᵢ dzᵃᵀfᵢta⊙lsta.
- ᵸ ∿ᵢdz ᵝ ᵀfs∘ннᵢta>ᵢ⊙dzᵃᵂ dz⊗(dz∿ʰ (□ ᵢ ς∿frᵢᵀdz⊙lsᵢ⊙∿(ᵀs∘dz □ □⊙ta⊙ς∿lsᵢta(frᵢs(ς∿ dzsdzᵃlststa⊙(ᵀfta∘s∘dz dzᵃᵂ frᵢdts ς⊙ᵢ ς∿frᵢᵀdz⊙lsᵢ⊙∿(ᵀ(ᵀfᵀs∘dz ∘ʰ ᵢdzᵃ(, frᵢstslsᵢ∘ᵢlsᵢfrᵢs∘lz ʰ ᵢdz frᵢdz нlz ʰ (dz lstsᵢ ʙts∘⊙dzᵃᵂdz ς lsᵢdzᵃᵢta⊙lsztsᵢ (ᵀ∘dz⊗>ᵢdzsfrᵢs(.
  - υᵢdzᵃᵢta⊙lsztsᵢ⊙ 5-35ÁC 41-95ÁF
  - ⅃ dz⊗>ᵢdzsfrᵢs : 20-80% tslsdzsfr(lsᵢdz dzs? ∘dz⊗>ᵢdzsfrᵢs(

υᵢ□tsʙfrᵢdz>ᵢ(∘⊙dzᵃᵢ:

- ς ta ʰ ς∿lz ς∿sta(ᵀlzfrᵢ⊙нtsdzᵃᵢdzᵃtslsς∿ta ∘⊙lsᵢ lstsdz ς∿ts ς∘⊙dz(ᵂ (ᵀ∿(ᵀdts∘⊙dzᵃdz ? frᵢᵀᵢ ∿(ᵀ(⊙dz(frᵢs frᵢᵢta∘(frᵢdzs? frᵢdz>ᵢʙʳ .
- ⅃ ta(dz ᵢts□ts∘нᵢ(dzᵃsfrᵢs(ᵀfᵀsdz∿ᵢdzᵃᵂ нts∿lzᵢdzᵃdzs⊙∿(ᵀ(ᵀfᵀs ta ᵢdzᵃsdzᵃlz (dz((dzᵃᵢta⊙∿(ᵀ(∘ нᵢdzᵃta(ᵀᵢ frᵢᵀfrᵢsᵢdzᵃ ts∘ta⊙lsᵢ(lsᵢfrᵢ ∘ dzᵃᵢfrᵢsdz ? frᵢta∘(frᵢdz ? ∿ᵢdzᵃta. (ᵸ dzᵃ ta⊙L нᵢdz çᵃ ᵢdzᵃta (dzᵃ tstaᵃ⊙∿(ᵀ(нdzᵂ ᵀfᵀsᵀstaᵃ ʙ(lsᵢdzᵃ?è)
- ʀ dzᵃ tstaᵃ⊙∿(ᵝ ᵀs∿ᵀsta⊙dzᵃᵀfᵀstas(ᵀta∘s∘ς∿ᵢ frᵢdzᵃ ∘ ta⊙L нᵢdzᵃ ç∿ ⊙ʙ⊙ta(lsdz ᵢ □⊙ta⊙ς∿lsᵢta(frᵢs(ς∿(è.
- ⅃ ᵢ tsfrᵢs⊙∘dzᵂ?lsᵢ dzsdzᵃlststa ∘ dzᵃ⊙ʰ (dzᵃ (dz(ʙ⊙ʙ⊙>ᵢdzᵃς∿ᵢ, ς∿tsᵀstaᵃ ᵢ dz⊗□tsнᵂlsfrᵢᵂ ᵀfᵀsн ᵀfᵀta∘ᵂdzᵃ dzᵃ frᵢs∘dzᵃ⊗ᵀdz dzᵃ frᵢ∘ᵢlsᵀstaᵃ

⅃ ʙta⊙lsᵢ(lsᵢfrᵢ ς frᵢᵀᵢ ∿(ᵀ(⊙dz(frᵢsdz frᵢᵢta∘(frᵢdzs∘ts ∿ᵢdzᵃta⊙, ᵢ frᵢdz(dzsdzᵃlststa dz ta⊙ʙtslsᵢ⊙ᵢlsdz⊗нdz ᵢ>ᵢ⊙frᵢ (dzᵃ(d ∿ᵢdzᵃ, ς⊙ς∿z ᵀfᵀta∘s∿ᵢнlz∘dz ∿ᵢdzᵃ∘ᵂ ᵀfᵀs∘dzᵃlsᵢ ᵀfᵀta∘(frᵢs∘dz нᵢdzᵃ(d (dzᵃstaz∘ς∿(d? ᵀfᵀs ᵀfᵀs∿frᵢdz⊙lsᵢ⊙∿(ᵀ(d dz⊗frᵢstsʷʰ ᵢ∘ts∘ta∘z∘ς∿ts∘нᵢ(frᵢs∘⊙.

⅃ʳ frᵢs∘ς∿ts∘ς∿tsdzᵃta⊙frᵢs∘dzᵃsᵢ frᵢs⊙lsᵢ(ᵀ∿(frᵢς∿tsᵢ (ᵀLtsʙta⊙>ᵢdzᵃ(ᵢ, ς∿tslsᵀstaᵃsᵢ tsfrᵢs⊙ᵢlsfrᵂ dz⊗ᵀ ς∿ta⊙dz LCD-dzsdzᵃlststa⊙ ∘ lsᵢ ∿ᵢdzᵃᵢ ᵀfᵀta∘нᵀsdzᵃ(lsᵢ dz dzs∘ts ᵀfᵀta∘(ᵀsн⊙ ∘ta ᵢdzᵃ(d, dzᵃs>ᵢ(lsʳ Lʳ ∘⊙lsᵢ lz∘нᵢta>ᵢ(∘⊙dzᵃᵢ (Ltsʙta⊙>ᵢdzᵃᵂ, ᵀfta(ᵀta∘ʙtslsᵀ⊙dzᵃdzᵃsᵢ (Ltsʙta⊙>ᵢdzᵃ(ᵢ dz(ʙts'ᵀfta(Lta⊙ᵢdzᵃsᵢ' (Ltsʙta⊙>ᵢdzᵃ(ᵢ dz⊗LCD-н(frᵢᵀdzᵃᵢ ᵢ. ⅃ ⊙dzᵃ? □ᵀtsᵀsʰ ts(Lʳ∘ᵢfrᵢs∘dz? ᵂ ᵢdzᵃs∘dzᵃᵢ∘dzᵃsʙlzfrᵢdzs∘dzᵃᵢ∘dz dzᵃtsᵃ ᵢdz∘dzᵃ∘dz ∘dz(ᵃ ᵢ(lsᵢ □dzᵃᵢ∿ᵢfrᵢς∿(dz∘(ᵃ tsta⊙dzᵃᵢ∿ᵢdzᵃᵂdz∘(ᵃ LCD-ᵀfᵀsta(Lʳ∘нᵀsfrᵢs⊙. ⅃ dzᵂ L⊙ʰ (dzᵃ ∘⊙ʰ ᵢdzᵃs н(frᵢᵀdzᵃᵂ tslslz∘нᵢta>ᵢ⊙dzᵃᵂ (Ltsʙta⊙>ᵢdzᵃᵂ ∘fnᵢʙ∘н⊙ς∿lsᵢ(∘(dz?lsᵢ ᵀfᵀta∘sta⊙dz∘dz-L⊙frᵢs⊙∘ς∿lz.

⅃ dzᵃ(dz∘⊙dzᵃᵢ: ⅃ ᵢ∘ʳ ᵀfᵀsdzᵃᵢdzᵃᵢ н⊙dzᵃ□ (dzᵃfrᵢs ᵀfᵀta∘ς∿(dz? dzs>ᵢ(lsᵢ ᵀfᵀta∘(∘ᵢfrᵢs(ς∿ ∿lz∘нᵢta>ᵢ⊙dzᵃᵂ (Ltsʙta⊙>ᵢdzᵃᵂ dzᵃʙts ᵀfᵀs ᵂ∘dzᵃᵢdzᵃᵂ ᵀfᵀta∘(ta⊙ʙtslsᵀsᵢ(dzᵃsʙts (Ltsʙta⊙>ᵢdzᵃᵂ, ς∿tslsᵀstaᵃsᵢ dzᵃ∘∘ts L dzs>ᵢ(dzᵃsfrᵢs(ᵀfᵀta∘(∘ᵢ(lsʳ dzᵃʙts∘lz∘нᵢta>ᵢ⊙dzᵃᵂ (Lʳ ⊙dzᵃ? ᵂ ᵢdzᵃs∘dzᵃᵢdzᵃs∘ᵀfᵀsᵀ⊙нᵢ⊙ᵢlsᵀfᵀs нᵢ?frᵢs∘(ᵃᵢ ∘⊙ta⊙dzᵃs(dz, ᵀfta(ᵃᵢнᵀsfrᵢs⊙∘dzᵂᵢdzᵃs? ς∿tsdzᵃ⊙dzᵃᵢ? Philips.

∫ ¡ta
B¡L tsf⊙fnjtksfrjsc[,
tf tsc[frf⊙ c[
lzfrjsta⊙dzj dzk¡
dzj c[frf tc⊙ dksfrjs¡?
Y⊙frjsts
ə ts⊥ dzk⊙ h c[¡
ə tsf tcsfrj
⊙ ⊙tc⊙dzk¿ ¡
w lzdk⊙ c[c[
tc¡ dzdzc[tcsə⊙c[
H tsə dz¡ frjsc[dz⊙sfrjs
fnjH tdzcdc[dz⊙[
tf¡ tac[w ¡ tac[?dz dz⊙[
lzfrjstcs?frjsə⊙dz⊙[
υ¡ ⊓ dksdzsdc[w
c[L cstsstsə dzj dzk¡w
r ⊙ tf⊙dzj dzj?
H ls⊙dzk⊙dcs
⊙ tcdtsdksdz⊙c[⊙c[,
⊙ ⊙tsdzsdc[c[c[
B¡L tsf⊙fnjtksfrjsc[
⊥ tsc[frf⊙ c[
lzfrjsta⊙dzj dzk¡
dzj c[frf tc⊙ dksfrjs¡?
⊥ tstcdz⊙ls c[ə dz¡
H ts⊙lzdz¡ dks
⊓ tdzcd¡
dzj tsB⊓ tsH c[dz⊙ ¡
frp¡ H¡ dzk¡w

Y⊙frjsts ə ts⊥ dzk¿⊙ h c[¡ ə tsf tcsfrj

Y⊙frjsts ə ts⊥ dzk¿⊙ h c[¡ ə tsf tcsfrj

J : Y lsts fnjdzj H lz¡ ls H¡ dz⊙ls , ¡ fnjdz[tf tac[lzfrjs⊙ dksə⊙ ⊙¡ dzsdzk¿ lststc⊙ dz⊙ ⊙tc⊙dzj tslstsB tc⊙ ⊙¡ lsfnj fnjstsB h ¡ dzk¿ "Cannot display this video mode"(⊙ lstsls ə c[H¡ tstc¡ ⊙ c[dz⊙ ə tsf tcsc[L ə¡ frjsc[dzj ə ts⊥ dzts⊥ dks)?

J : [¡ ⊙tsdz¡ dzk lz¡ dz⊙ ? ə c[H¡ tstc¡ ⊙ c[dz⊙ H dzw dzsdzk¿ lststcs ə Philips dzts H¡ dzj? 20": 1680x1050, 60 ¿ ⊙.

/, ∫ lsfrjs¡ H c[dzk¿ ls¡ ə fnj ⊙⊙B¡ dz[, L⊙ls¡ dz⊙ tf ts H frjs¡ H c[dzk¿ ls¡ ⊥ s ⊙ dzsdzk¿ lststdz, ⊙ tslstsc ? c[frf tsdz L ts ə⊙ dzfnw fnjdzk¿ c[dz⊙ tc⊙ dzh ¡ c[dksstcdz⊙ dz dks tc⊙B tsls⊙ dz
0, J dz¡ dz WindowsÈ Start (⊙ tf lzfrf) ə r B¡ tac[ls¡ tf lzdk⊙ls Settings/Control Panel (⊙ frjstcs?⊙c[/⊥ ⊙dzj dz lzf tc⊙ə dzj dzk¿w). J ts⊙dz¡ Control Panel (⊥ ⊙dzj dz lzf tc⊙ə dzj dzk¿w) ə r B¡ tac[ls¡ tf c[⊙ lstsstc⊙ dz⊙ dz Display (⊙ ⊙tc⊙dz¿ ⊙ tf ⊙dzj dz[lzf tc⊙ə dzj dzk¿w ⊥ ⊙tc⊙dksdz⊙ə r B¡ tac[ls¡ w tcdz ⊙ Settings (⊙ frjstcs?⊙c[) . J tslstsB tc⊙ ¡ dzksdz⊙ tf ts H w tcdz ⊙ tsdz⊙ Settings (⊙ frjstcs?⊙c[) ts⊙dz¡, tsB ts⊥ dz⊙ ¡ dzksdz⊙ "desktop area" (tsB dz⊙ frjs tc⊙B ts¡ dcs frjstsdz⊙), tf ¡ tac¡ dz⊙ ¡ frj⊙ls¡ frj⊙tsdz L wh c[? lz⊙ L⊙ls¡ dz dz⊙ ə⊙ tac[⊙dks 1680x1050 (20") ⊥ dzj dz⊙ ¡ dks ə c[L tsB tc⊙ ¡ dzk¿w.
1, ∫ ls⊙tcs?ls¡ ts⊙dks Advanced Properties(υ frjs ə¡ tch ¡ dzk¿ ə ts ə⊙ dzk¿ ¡ w lzdk⊙ c[c[) c[lzfrjs⊙ dks ə c[ls¡ c[frjstsls z tac¡ c¡ dzj tc⊙ c[c[- 60 ¿ ⊙, tf ts fnjdzj c¡ ¡ dz⊙ dzk¿ls¡ dz⊙ h B dz⊙ OK.
2, ⊥ ¡ tac¡ L⊙ tf lzfrjs⊙ c[ls¡ ⊙ts dz⊙ B ls¡ tc c[tf ts ⊙ lststc⊙ c[ls¡ h ⊙ c[2 c[3, c[ts B r lzB¡ H c[ls fnjw ə lstsdz⊙ c[ts ⊥ s lzfrjs⊙ dks ə dzj dz ə tac¡ ⊙ c[dz⊙ 1680x1050@60 ¿ ⊙ .
3, ∫ ls⊙dz c[ls¡ ⊙ts dz⊙ B ls¡ tc, tslsfrjs¡ H c[dzk¿ls¡ c[frf tsdz L ts ə⊙ h c[? fnjw tc⊙dz¡ ¡ dzsdzk¿ lststc c[ə dks ə B tf ts H frjs¡ H c[dzk¿ls¡ dzsdzk¿ lststc Philips fnjr s r .
4, J ⊙dz c[ls¡ dzsdzk¿ lststc, ⊙ L⊙ls¡ dz⊙ - ⊥ s.

J : Y lsts ts⊥ dz⊙ c[⊙¡ ls "c[⊙frjstsls⊙ tc¡ ¡ c¡ dzj tc⊙ c[c[" ə dzsdzk¿ lststc¡ fnjr s r ?

J : r dzw dzsdzk¿ lststcs ə fnjr s r c[⊙frjstsls⊙ tc¡ ¡ c¡ dzj tc⊙ c[c[tsfrjsB ts? tcsdz[dz¡ c[tc⊙¡ ls. ∫ tsdzk¿ lststc fnjr s r tf ts⊥ ə ts dzwB ls tf ts dz c[c[ls fnjs⊙B c[dz dzks¡ dz¡ dz⊙ ¡ tc⊙ c[⊙h ¡ ¡ c[L ts B tc⊙ ¡ dzk¿ ¡ dz⊙ c[⊙frjstsls¡ 60 ¿ ⊙. ⊥ ¡ fnjh ¡ frjs ə lz¡ ls ə c[H c[dz⊙ ⊓ tc⊙L dz[c[? dz⊙ ¡ c[L ts B tc⊙ ¡ dzk¿w dz⊙[, w ts tcdz⊙[tdz¡ dz⊙ dz⊙[fn c[⊙frjstsls? tc¡ ¡ c¡ dzj tc⊙ c[c[75 ¿ ⊙ c[60 ¿ ⊙.

J : r dzw c[¡ ts fnjdz⊙ ⊥ ls w ⊙? dz .inf c[.icm files dz⊙ ⊙tsdz⊙ ⊙ls H c[frf¡? s ⊙ lzfrjs⊙ dks ə c[ls H tc⊙? ə¡ tac (.inf c[.icm)?

J : ⊙ ls ts w ⊙? dz H tc⊙? ə¡ tac⊙ H dzw dzsdzk¿ lststc⊙ Y lsts B r ə r tf ts dzdzk¿ ls lzfrjs⊙ dks ə⊙ lz H tc⊙? ə¡ tacs ə fnjdz¡ H lz? ls¡ lz⊙ L⊙ dzk¿w dz⊙ ə tdz⊙ ts ə ts H frjs ə¡ tf ts dz L ts ə⊙ ls¡ dzw. ⊥ tac[tf ¡ tac ə ts? lzfrjs⊙ dks ə⊙ ¡ dzsdzk¿ lststc⊙ ⊙ts dz⊙ B ls¡ tc dz⊙ ⊥ ¡ ls L⊙ tf tcs fnj ls H tc⊙? ə¡ tac dzsdzk¿ lststc⊙ (w ⊙? dz .inf c[.icm files) c[dz[H c[frf⊙ fn H tc⊙? ə¡ tac⊙ dz⊙[. J r tf ts dzdzk¿ ls¡ c[dzk¿ tdz⊙ c[c[tf ts lzfrjs⊙ dks ə⊙ ¡ ⊙ts dz⊙ ⊙ ls H c[frf⊙, ə⊓ ts H wh ¡ dcs ə ⊙ts dz⊙ dz¡ ⊙ ls tf ts frjs⊙ ə⊙ c[. r tc⊙? ə¡ tac dzsdzk¿ lststc⊙ (w ⊙? dz .inf c[.icm) B lz H lzls lzfrjs⊙ dks ə dz¡ dz ⊙ ⊙ ls ts dz⊙ ⊙ ls c[¡ frf⊙ c[.

J : s ⊙ dz⊙ frjstcs c[ls tc⊙ L tc¡ h ¡ dzk¿ ¡?

ʃ : ˥ tsfrjsdzʃdz ˩ taO.ta˩h ˩dz˥w LOɔdfrjwlstslsfrjsu˩lsOdz˥w HtaO?ɔ˩taOɔdfH˩ts- dfdz˥ dtaOw dfu˩frjts? ʔtdsr dfdzsdz˥lststaO.˥ lz˥dts˩ taO.ta˩h ˩dz˥˩ dzs˥dts ɔr BtaOls ɔ˥ Odz˥dz˥ lzʃtaOɔdz˩dz˥w WindowsÈ tʃtadʃtʃtsdzsh dʃtsʔdz?çDisplay propertiesè (H ɔtsʔfrjsɔO. ʔtaOdz˥.

ʃ : Ylstsh˩dz?ls , ˩frjdz˥w LOʃlzlsOdzrjw(dz?frj) dz?frjstaOdfɔOw dzsdz˥lststa?

ʃ : ˥ Oldzʃlsj ʔdzsʃʔlz OK, LOlsjdzɔr B˩tadfsfr), ˥ulstsBr ɔtsfrjrjsOdzsɔdfls tʃ˩tadtsdz?˥uʔdz dz ˩ LOɔtsHfrjʔdʃ˩ dz?frjstdts?ʔdfɔfrj˩ tʃOtaOdz˩lstdtsɔ.

ʃ : ˥ dzw ˥u˩dtsdzɔ˥dz?w lzdz?˥ufw Auto?

ʃ : ʔdz?ɔdh O∧ *lzdz?˥ufw ta˩dtzdz˥dtdtsɔʔdf AUTO* frjdzɔ˥dlsHdzw ɔtsfrjrjsOdzsɔdz˩dz˥w tsʃlsdfdzOdz dz ˥ dz?frjstdts˩ʔ tʃtsdzs˥˩dz˥w dfLtsBtaO˥˩dz˥w dz?˥taOdz˩, w OLr df frjdfZtdsdz˥LOufdf dz?˥ OlsdfjdztsHdzs? ʔdzsʃʔdf, ˥ulstslzfrjstaOdzw˩lsdz˩tsBtsHdfdztsfrjs OʔlsdɔdLOufdf˥ ʔtaOdz˥dz ˥ dz˩jdz dfdfrjʃtsdzLtsɔOdz˥w lzʃtaOɔdzwB h dfʔdz?ɔdh .

˥ tadfdz˩jufOdz˥dj˩: w **lzdz?˥ufw Auto (ɔ˥lsts) Htsfrjslzʃdz?lstsdzʔtsɔ ɔr BtaOdz˥dz˥ ˥ ta˩jɔ˥dfdzʔ˥.**

ʃ : ˥ Odz˥dz˥lststadz˩ tʃtsHO˩lsfrjw dz?ʃtawɔ˥˩dz˥˩ tʃdlsOdz˥w (dz˩ dtstadlsfrjɔ˩lstsHdtsHdz˥ ? dfdz˥dfʔOlststa tʃdlsOdz˥w). Ylstsfrjdz˩Hlz˩lstʃta˩Htʃtadfdz˥ls ?

ʃ : UB˩Hdls˩frj , ˥ulstsfrjdtsɔts? ʔOB˩dz tʃ˩ta˩dz˩dz˥dztsdtslstsʔOtʃtsHʔdz˥ ˥u˩dzʔ dz˥sdz˥lststdz dfta O˩j ˩dz˥z ɸH , dfʔdzʔdz˥ls˩ ʔdzsʃʔts? ʔdz?ɔdfOlslztar /dz˥ h ʔdf, ˥ulstsBr taO.BlzHdls ʔtsdz˥ʃJ B ls˩ta.

ʃ : J lzH˩lsdzf r ʔ dz˥sdz˥lststatʃtadfdz˥dz˥Ols ˥u˩ta˩frjrjstdtsˬudz˥? frjfdz?dzdts˥1 ʔ?

ʃ : ˥ ˩ls ˥ frjdzf dz?dz˥sdz˥lststatʃtsHOls ˥u˩ta˩frjrjstdtsˬudz˥? frjfdz?dz dz?˥taOdz˩ Blz˥lzls tsHdzsɔta˩dz˩dz˥dztsltstsBtaO˥Ols frjw df ˥u˩lsdz˥ ˩, df dz˩˥u˩lsdz˥ ˩ frjstdtsʔdf, tʃtsl lstsdz˥z dfLtsBtaO˥˩dz˥˩ Blz˥˩lsdfrjʔO˥Ols frjw.

ʃ : R dz˩˩lsdzf LdzO˥u˩dz˥˩ ˥uOfrjstslsOta˩dz˩dz˥taO˥ufdf Hdzw r ʔ˥ ?

ʃ : J tslsdzf˥ufdf˩ tslsHdfrjʃdz˩˩ɔ dz?BOL˩ ʔʃ U, ɔ ʔtslststa ˥ Hdzw w tstadz˩ʃtatsɔOdz˥w dfLtsBtaO˥˩dz˥w dfrjʃtsdzLlz˩lsfrjw taO.ɔ˩tatsʔOdzˬuOtslsɔ˩ta˥dz˩? tsBdz?frjsdf˥ʔtaOdz?Hts dz˥˩dz˩?, ɔ Hdfrjʃdz˩˩ frjOʔlsdɔdts? dz˥Olstadf˥u˩? Hdzw lzʃtaOɔdz˩dz˥w ʔO˥Hr dz˥tslsH˩dz dz dz˥ tʃdfʔfrj˩dz˩dz˥dfrjʃtsdzLlz˩lsfrjw Oʔlsdɔdz˩? ˥ dz˩dz˥dts(lstsdz?tstʃdz˩dtsudz˩? lstaOdzdfrjststa), tʃtsl lstsdz˥z ls˩tadz˥dz"ta˩dz˩dz˩taOudw u˥frjstslsr "ʔ ls˩˥dtsdtsɔdfdf r ʔ˥ dz˩tʃtadz˩dz˥dz˥

ʃ : Ufrjsts?ufɔ dzf˥ʔtaOdzr ʔ˥ ʔ uOtaOʃOdz˥w ?

ʃ : ˥ Otʃtsɔ˩ta˥dtsfrjs r ʔ˥ dz?dtsfrjwlsLOh dfldtsj tʃtsʔtar ldf˩, tsBdz?HOx h ˩˩ frjsts?ʔtsfrjsx ʔ ɔtsLH˩?frjsdfx tʃta˩Hdz˩lstsɔ tsʃta˩Hj˩dz˩dztts? lsɔ˩ta˥Htsfrjsdf (tʃtadf˩ta˥dtsˬʔɔdfɔOdz˩dztts? lsɔ˩ta˥Htsfrjsdf ʔOtaOdz˥w Oh Oldf˩O2˥ (2U)). ˥ ˩ ta˩ʔtsdz˩dz˥lzlsfrjw tʃtsHɔ˩taOls tʃtsɔ˩ta˥dtsfrjs tʃOdz˩dzf dz B˩ dz˥dfLB˩ lstsudz˥ dz˥lzHOtadz˥ dz˥dz?stdzLʔOdz˥dfdf uOtaOʃOdz˥x .

J : ş⊙¢ tsuɖfrɟsɖlsı tʃtsɔ¸ɟtɑ¬dɑ̈sfrɟsı r ş⌐ ?

ʃ : ⌐ dz˝ tsʙʳ ɥɖɑ̈s? tsuɖfrɟs¢ɖ ɔtsfrɟʃtsdz ʟlz?lsɟ frɟ ɥɖfrɟsts?, dz˝ɑ¢ts? lstsdɑ̈ts? ls¢⊙dzʿ . ⌐ dz˝ lsʰ ⊙lsɟdz dɑ̈s? tsuɖfrɟs¢ɖ ɖfrɟʃtsdz ʟlz?lsɟ ɖʟtsʃtɑtsʃɖdɑ̈sɔʳ ? frɟʃɖtɑ̈ds ɥ ɟ ʜtsʃlzfrɟ¢⊙ɟlsfrɟ˝ ɖfrɟʃtsdz ʟtsɔ⊙lsı ʜtɑzɑɖɟ tɑ⊙frɟsɔtstɑɖlsɟdzɖ, ls⊙¢ɖɟ ş⊙¢ʿ lsɖdɑ̈sɔʳ ? frɟʃɖtɑ̈ds, ʿ ls⊙dɑ̈sdz⊙uɟlstsdz ɖɟş⌐frɟ⊙dzɖ lstʃ.

J : ʃ tsdz dzɖ˝ ɖʟdɟɟdzɖlsı ɥɔɟlstsɔʳ ɟ dz⊙frɟstɑ̈ts?ş⌐ɖ frɔtsɟɑ̈ts dɟtsdzɖlststɑ⊙?

ʃ : ⌐ ⊙, ɟʳ dɟts⊳ɟlsɟ ɖʟdɟɟdzɖlsı ɥɔɟlstsɔʳ ɟ dz⊙frɟstɑ̈ts?ş⌐ɖ frɔtsɟɑ̈ts dɟtsdzɖlststɑ⊙, ɖfrɟʃtsdz ʟlz˝ OSD tɑɟdzɑdz˝lststɑ ɖ frɔdzɟʜlz˝ frɔdzɟʜlzʿʰ ɟ? tʃtɑ̈tsɥɟʜlzɑ̈ɟ:

1. ɥ ⊙⊳dɟɟɖlsɟ "OK" tʃtsʷɔɖdɑ̈sfrɟ OSD (On Screen Display) dɟɟdz
2. ɥ ⊙⊳dɟɟɖlsɟ "ʜlstɑɟdz⊙ɟ dzɖ˝L" ɥ¿stsʙʳ ɔʳ ʙtɑ⊙lsı tsʃɥɖʿ ""color" (ɥɔɟls)" ɖ lstsɔʜ⊙ dz⊙⊳dɟɟɖlsɟ "OK" ɥ¿stsʙʳ ʟ⊙?lsɖ ɔ dz⊙frɟstɑ̈ts?ş⌐ɖ ɥɔɟls⊙ ʊ⊙dɟtɑ⊙ɟdɟɟʰ ɟdz tʃ˝lsı frɔdzɟʜlzʿʰ ɖ¬ ɔ⊙tɑɖ⊙dɑ̈stsɔ:

a. 6500ş Å¿ ls⊙lzfrɟs⊙dɑ̈sɔş⌐⊙ʟ⊙ʜ⊙ɟls ʙɟdɑ̈ts-ş⌐tɑ⊙frɔdz? lstsdzʃ⊙dɟɟdzɖ.
b. 9300ş Å¿ ls⊙lzfrɟs⊙dɑ̈sɔş⌐⊙ʟ⊙ʜ⊙ɟls ʙɟdɑ̈ts-ɑ̈tsdzʙts? lstsdzʃ⊙dɟɟdzɖ.
c. Original (ʙ frɟ¬tsʜdz?) Ådz⊙frɟstɑ̈ts?ş⌐⊙ʟ⊙ɑ̈tsdz⊳⊙ɟls dz⊙frɟstɑ̈ts?ş⌐ɖ tʃ⊙dɟɟdzɖ, ʟ⊙ʜ⊙dzɑ̈dz ɟ tʃtsʟzdɟtsdzɥ⊙dzɖʿ frɟsdz⊙frɔdɑ̈s ɥɔɟlstsɔts? ɑ⊙dɟdɟɟ. (tʃtɑɖdɟɟ ɥ⊙dzɖɟ: tɑ⊙ʟdz ɟ dz⊙frɟstɑ̈ts?ş⌐ɖ tʃ⊙dɟɟdzɖ dɟtsdzʃlsɔʳ ʟɔ⊙lsı tɑ⊙ʟdzɖɥɖɑ̈sɟ tslstsʙtɑ⊙⊳ɟdzɖɟ lsɟdɟtʃɟtɑ⊙lsɟtɑ˝ ɔ ɥɔɟlsɟ*)
d. sRGB Å¿ ls⊙frɟs⊙dɑ̈⊙ɑ̈tsdz⊙˝ dz⊙frɟstɑ̈ts?ş⌐⊙, tsʙɟfrɟʃɟ ɥɖɔ⊙ʿʰ ⊙˝ tʃtɑ⊙ɔɖdzɖ? tsʙdɟɟdz ɥɔɟlstsɔ dɟɟ⊳ʜlz tɑ⊙ʟdz dɟɟ ɟzfrɟstɑ̈ts?frɟsɔ⊙dɟɟ (dz⊙ʃtɑɖdɟɟtɑ, ɥɖ˝ tɑ̈tsɔʳ ɟ ş⌐⊙dɟɟtɑ˝ , dɟtsdzɖlststɑ˝ , tʃtɑɖdɑ̈sɟtɑ˝ , frɟş⌐⊙dɟɟtɑ˝ ɖ lsʜ.)
e. User Define (ʃ tʃtɑɟʜɟdzɖlsɟdz tʃtsdzʟtsɔ⊙lsɟdz˝) - tʃtsdzʟtsɔ⊙lsɟdz dɟtsɔ⊳ɟlls ɔʳ ʙtɑ⊙lsı ɟdtsɟɟ tʃtɑɟʜtʃtsɥlsɖlsɟdz dz? ɥɔɟlstʃzlsɟdɟtɑɟdzdzɖtɑ̈tsɔş⌐ɖ ş⌐tɑ⊙frɔdɑ̈sdts, ʟɟdzɟdɑ̈sdts, dtsdzʙtsdts ɥɔɟlstsɔ.

*ʙʟdɟɟtɑɟdzɖɟ ɥɔɟls⊙ ɖʟdzɥɟdzɑ̈sdts tsʙɟ ɟş⌐lstsdɟɔts ɔtɑɟdɟ˝ dz⊙dtɑɟɔ⊙dzɖ˝. ʙʟdɟɟtɑɟdzɖ˝ ɔʳ tɑ⊙⊳⊙ʿ lsfrɟ˝ tʃtsş⌐frɟsdz˝ lsdɑ̈s? ʰ ş⌐⊙dɟ (dtɑ⊙ʜlzfrɟ ş⌐ɟdz ɔɖdz⊙). ɥ ɖ⊳dzɖɟ lsɟdɟtʃɟtɑ⊙lsɟtɑ˝ tʃtsş⌐ɟdz ɔɖdz (ls⊙¢ɖɟ ş⌐⊙¢ʿ 2004ş) tslstsʙtɑ⊙⊳⊙ʿ lsfrɟ˝ ş⌐tɑ⊙frɔdz dɟ ɔʳ frɟs¢ɖɟ lsɟdɟtʃɟtɑ⊙lsɟtɑ˝ (ls⊙¢ɖɟ ş⌐⊙¢ʿ 9300ş) Åtsdzʙʳ dɟ ɥ ɟ? lstɑ⊙dz dz ɟ lsɟdɟtʃɟtɑ⊙lsɟtɑ˝ , dz⊙ɥɖ⊙˝ frɟ6504ş - ʙɟdz dɟ

J : ʃ tsɥ⊳dɑ̈s dzɖ˝ lzfrɟs⊙dɑ̈sɔ ɖʟlsı r ş⌐-dɟtsdzɖlststɑ Philips dz⊙frɟsɟdzɖ?

ʃ : ⌐ ⊙, ⊳ɖʜş⌐ts⌐tɑ⊙frɟs⊙dzdzɖ˝ɥɟfrɟ¢ɖɟ dɟtsdzɖlststɑ˝ Philips Brilliance ɖ dɟɟʿ lsʿ lsdz˝ lzdş⌐ɥɖʿ , tɑɟ⊙dzɖ˝ʟlzɟdɟzʿ tʃtsʟtslsʜɟdz dɑ̈sdɟz ʟ⊙¢⊙ʟz. ʏɟlsı tɑɟ frɟs⊙dz⊙⊳dzdz ɟ tslsɔɟtɑfrɟsɖ˝ VESA dz⊙ ʟ⊙ʜdzɟ? ş⌐tɑ˝ ʰ ş⌐ɟ tɑ⊙ʟtɑɟʰ ⊙ɟlsʃtsdzʟtsɔ⊙lsɟdz˝ ʟ⊙¢tɑɟtʃɖlsı dɟtsdzɖlststɑ Phillips dz⊙ ʙtsdzʰ ɖdɑ̈sɔɟ frɟs⊙dz⊙⊳dzdz ¬ tʃtsʜfrɟs⊙ɔtsş⌐ ɖ ʜtdzɔɖ¬ tʃtɑɖdz⊙ʜdɟ⊳dɟsfrɟs˝¬ VESA. ʃ ʳ tɑɟş⌐tsdɟdzɖlzɟdɟtsʙtɑ⊙lsɖlsı frɟ˝ ş⌐ tʃtɑɟʜfrɟs⊙ɔɖlsɟdz˝ tʃtsʃtɑtsʜ⊙⊳⊙dɟ Phillips ʟ⊙ʜɟls⊙dz dɑ̈s? ɖdz˝ tstɑdɟ⊙ɥɖɟ? .

B: ʏlstslş⌐⊙⌐tsɟ lzʜɟtɑ⊳⊙dzɖɟ ɖʟtsʙtɑ⊙⊳ɟdzɖ˝? ş⌐⊙⌐ts? frɟʃtsfrɟsʙ ˝ɔdz˝ɟlsfrɟ˝ tsʃlsɖɟɟ⊙dz dz. dɟʜdz˝ tʃtɑɟʜtslsɔtɑ⊙ʰ ɟdzɖ˝ lzʜɟtɑ⊳⊙dzɖ˝ ɖʟtsʙtɑ⊙⊳ɟdzɖ˝?

O: ɥ ɟtɑfrɟ¬frɟsɟdzdɑ̈sfrɟsı ɖʟtsʙtɑ⊙⊳ɟdzɖ˝, tʃtɑɖtɑ⊙ʙtslstsɥɖdɑ̈sfrɟsı ɖʟtsʙtɑ⊙⊳ɟdzɖ˝, tsfrɟs⊙lstsɥɖdɑ̈sɟ ɖʟtsʙtɑ⊙⊳ɟdzɖɟ, ʟ⊙ɔɖfrɟ⊙dzɖɟ ɖʟtsʙtɑ⊙⊳ɟdzɖ˝ dzɖʙts 'tʃtɑɖʟtɑ⊙ɥɖdɑ̈sɟ ɖʟtsʙtɑ⊙⊳ɟdzɖɟ' ï ɔfrɟɟ ʿ lsɖ lsɟtɑdɟɖdz ɖfrɟʃtsdz ʟlzʿ lsfrɟ˝ ʜdz˝ tsʃɖfrɟ⊙dzɖ˝ ʊʜɟtɑ⊳⊙dzɖ˝ ɖʟtsʙtɑ⊙⊳ɟdzɖ˝ dz⊙ LCD-

ڈ؟ڈ؟ڈ؟

60 ¡ ч нdw dзtsdвlststсtsо fпн d[Oтsdв©dz ʁ ‹ ¢tвOdв© 20-нʁ ?dзtsо. ł tвd[dзj uOdвj: tjtсtsоj tвd[ls lsj¢tzh d[j dв©frjstсts?¢d[нd[frjfdвj w dзts›| dвs, dв©›| O› ¢dвsf¢tz OK ‹ ¢tвOdвdвsсts dзj dвz tsнd[dzсtвO. ъj¢tzh d?ł tвj›| d[dз нd[frjfdвj w tslstsвtвO›| Oj lsfпw ə tвOнj dвj Product Information (R dвw tstсdзOud[w tsв d[нj dвz[d[) ə ə ‹ ¢tвOdвdвsсdзj dвz Main Contols (¸ frjdвsə dвz j tjOtвOdзj lstсr).

0, г dвw d[dвjlsOdвzdвw ud[d[tjtсtsсtвOdзdз tвj dвzdвz[tсtsə¢d[tjOdвsfr¢d[tjOdвj dвj ? (Ft adjust), LOfd[frjOdвdвs? dв©lzfrjsOdвsə tsudвsdз CD-ROM dзsdв[lststвO, O¢lsd[ə d[Ld[tdz?lsj CD-ROM d[нəO›| нr h j dв©dв[lsj dзr h ‹ ʁ dв© tjd[¢lstsсtвOdзdзj Ft _setup05.exe. ł tвsсtвOdзdзO FP Adjust lzfrjsOdвsə d[lsfпw Oəlstsdз©lsd[uj frj¢d[, O dв© tвOв tsuj ? tjOdвj dвz[‹ ¢tвOdв© tjtswə d[lsfпw frjstslsə j lsfrjsə lzʁ h d? wtвdz ¢ tjtсtsсtвOdзdз .

1, ı Ofjlzfrjsd[lsj tjtсtsсtвOdзdзz FPadjust нə ts?dz dзh j dzu¢tsdзdзr h d[dв©wtвdz ¢j tjtсtsсtвOdзdз . J r tjtsdzdв[lsj tjtsh Otsə r j d[dвjlstdz¢ud[d[нdz tsjlsd[dзd[L Oud[d[d[L tsв tвO›| j dв[w tjtвd[tjtsdзjsh d[frj[frjsj dзdвsсts ə d[нj ts¢tsdвstсtsdzdзj tвO.

J : ş O¢tsə ts d[L dвzuj dв[j r ş[tjtts frjtвO› dзj dв[ʁ frj¢ ∫ υ?

∫ : ł tsfr¢tsdz ¢tz ə r ş нd[frjfdзj w¸ dзj d[frjftsdz L lzj lsfпw ‹ dзj ¢lstсtsdвz ? tjtсts› j ¢lststв, d[L dвzuj dв[j frjtjtsə j tв¸ dвsfrjsd[‹ ¢tвOdв© frjzh j frjsə j dвdвs dзj dвzh j , uj dзə ¢ ∫ υ.

ʁ ʁ ʁ

υ1 z ⌐ lzfrjstα⊙dz⁄j ls tstα⊙dz⁄[ujdz⁄[j dz⁄⊙ uζfrjdts tζ ts⌐ζdz⁄ uζ⊙j dζ3 ⌐ lzfrjstαts?frjso. ⌠ j L υ1 z ζ1 ζ
tsB r uζdts dζ3s⌐ dζts tζ ts⌐ζdz⁄ uζ[ls⁄ lstsdz ζts ts⌐ dζ[dz⁄[tα⊙[dts⁄j tα, H9⊙ lzfrjstαts?frjso⊙ frj
tζ tsfrjdζj H tso⊙ ls⁄j dz dz⁄ dζ3[ζtsdζ3ζ3dz⁄dζ⁄ζ⊙ uζ[tsdz⁄dz⁄ dζ3[tζ tstαts⊙dζ3[(ζ⊙ζ tζ tα⊙⊙ dζ[dts dζ3 h ⌠ dζ[dζ3s⌐ j dζ3),
ts⌐ dts⁄ H tsζ tsdz⁄dz⁄[ls⁄j dz dts⁄j lzfrjstαts?frjso ts frj lzfrjso j tα h j dts⁄jso ts⊙ dz⁄dz⁄ dζ3 tζ⊙ tα⊙dz⁄dζ⁄j dz dz⁄ dζ3
tζ tstαts⁄ dζ3 H dz⁄ lzfrjs⊙ dts⁄⊙ ζ⊙[H tsζ tsdz⁄dz⁄[ls⁄j dz dz⁄ ⌠ tζ j tα⁄j W j tα⊙[?dz⁄ ⌠ lzfrjstαts?frjso (9 uζfrjdts⁄frjs⊙[,
frj⊙dζ⁄j tα[dz⁄[9⊙[H j ts⌐ζ⊙dζ3j tdz) ⊙[H ⊙ ts?frjs⊙[ζ. ⌠ ζ⊙ H r dζ3 H dζ⁄j dζ3 dζ⁄⊙ frjso tα⁄j dζ3j dz⁄dts dζ3 tα r dζ⁄j
tζ tα⁄j H dz⁄⊙α⁄j ls frj w 9frj B tsdz h j dts⁄⊙ r ⌠ tζ j tα⊙[W j tα⊙[?dz⁄ ⌠ lzfrjstαts?frjso H dz w dζ3zdz ls⊙[dζ3j H ⊙[?dz⁄ ⌠
ζtsdζ3ζ J B ls⁄j tdts⊙.

1 tα⊙[tζ tsdζ3ζ h ⊙[υ1 z ζ ts⌐ dts⁄dζ3z ζtsdζ3ζ J B ls⁄j tdz dζ3s⌐ dts⁄ ts⌐ dts⁄ tα⁄j dζ3j dz⁄dts tζ ts⌐ζdz⁄ uζ[ls⁄ H ts
127 lzfrjstαts?frjso. υ1 z tζ ts L 9tsdz⁄j ls tsζ j tα⊙ls⊙[9dts tζ ts⌐ζdz⁄ uζ⊙ls⁄ tζ j tα⊙[W j tα⊙[?dz⁄ j
lzfrjstαts?frjso⊙. 1 tα⊙[ls tsdζ3 H dz w lzfrjs⊙ dts⁄⊙ ζ⊙[tζ j tα⊙[W j tα⊙[?dz⁄ ⌠ lzfrjstαts?frjso dζ⁄j ls tα⁄j B lzj ls frj w
9r ζdz⁄ uζ⊙ls⁄ frj[frjs⁄j dζ3z, tζ ts⌐ frjs⁄j H ⊙[dz⁄ls⁄ lzfrjstαts?frjso⊙, tζ j tα⁄j L⊙ dtdz⁄ ⊙ls⁄ frj[frjs⁄j dζ3z ⊙[9dts⁄⊙ J
L⊙ tζ lzfrjζ⊙ls⁄ j j 9 tα⊙B tsls⁄z. 1 tα⊙[tsls frjs⁄j H ⊙[dζ⁄j dζ⁄⊙[lzfrjstαts?frjso⊙ ls⊙ζ⊙⁄ j tsls tζ⊙H⊙⁄j ls
dζ⁄j tsB ⌠ ts⌐ H ⊙[dζ3s frjs⁄ 9r tζ tsdz⁄dζ⁄j dζ⁄[w tζ tdts uj frjζ⊙, ts B tα⊙ls dts⁄dts tsζ ⊙[frj⊙ dζ⁄dts⁄dζ3z. 1 tdts h j dts⁄jsdts⁄w,
υ1 z tζ ts L 9tsdz⁄j ls tζ tα⊙ζ⊙ls⊙[uj frjζ⊙[tα⁄j ⊙dz⁄[L tso⊙ls⁄ 9frj tζ tα⁄j ⊙[dζ3z h j frjso⊙ frjso tα⁄j dζ3j dz⁄dts?
ls⁄j ⌠ dts⁄dts⁄dζ⁄["9ζdz⁄ uζ⊙? ⊙[tα⊙B tsls⊙?"!

⌠ tsζ tsdz⁄dζ⁄[ls⁄j dz dz⁄ ⊙[dζ⁄ W tstα⁄dζ3⊙uζ[ts USB frjζ3 9 ⊙dts⁄frj⊙tα⊙[.

J : Y ls⁄ ts ls⊙ζ ts⁄j ζ ts⁄dz⁄j dts⁄tα⊙ls⁄ts⁄tα υ1 z ?

J : ζ ts⁄dz⁄j dts⁄tα⊙ls⁄ts⁄tα υ1 z tsB j frj j uζ[9⊙j ls H tsζ tsdz⁄dz⁄[ls⁄j dz dz⁄ j frj⁄j H ⊙[dζ⁄j dζ⁄[w frj
lzdζ⁄[9j tα⊙frj⊙dz dts? tζ tsfrjζ⁄j H tso⊙ls⁄j dz dts? ⊙[dts? h ⊙[dts?. 1 tstα⁄s 9 tsfrj⌐ ts⌐ w h j ? frjζ w L ⊙[
ζtsdz⁄j dts⁄tα⊙ls⁄ts⁄tα⊙ frjdz⁄> ⊙[ls H dz w frj⁄j H ⊙[dζ⁄j dζ⁄[w ζtsdz⁄j dts⁄tα⊙ls⁄ts⁄tα⊙ frj⊙dζ⁄⊙ dz dζ3 lzfrjstαts?frjso tsdζ3
tsB r uζdts frj 1 ζ. ∫ dts⁄dts⁄s uζ[frjζ⁄j dζ⁄dz j tζ tstα⁄s dζ⁄[frj⌐ ts⌐ w h j ? frjζ w L ⊙[ζtsdz⁄j dts⁄tα⊙ls⁄ts⁄tα⊙
tsB j frj j uζ[9⊙ ls frj⁄j H ⊙[dζ⁄j dζ⁄[j ζtsdz⁄j dts⁄tα⊙ls⁄ts⁄tα⊙ frj H tα⁄dz⁄⊙[dζ3 ζtsdz⁄j dts⁄tα⊙ls⁄ts⁄tα⁄dζ3 ⊙[dζ⁄[
lzfrjstαts?frjso tsdζ3 dζ⁄⊙ tα⊙[dζ⁄j tα ζ⊙dz⁄⊙ 9⊙[ls⁄ztα⁄s? υ1 z , 9⊙[H j ts⌐ζ⊙dζ3j tα⁄s? ⊙[dζ⁄[tζ tα⊙[dts⁄j tα⁄tsdζ3

J : Y ls⁄ ts H j dz⁄⊙ ls⁄ , j frjζ⁄[9⊙dζ⁄h dζ⁄[j USB-lzfrjstαts?frjso⊙ dζ⁄j tα⊙B tsls⊙ ls frj USB-ζtsdz⁄j dts⁄tα⊙ls⁄ts⁄tα⁄dζ3 dζ3s⁄dζ⁄[ls⁄ts⁄tα⊙?

J : 1 tα⊙[9 tsL dζ⁄ζ⁄dts⁄j dζ⁄[tζ tα⁄s B dζ⁄j dζ3 tsls⌐ζdz⁄ uζ[ls⁄j ⊙[L⊙ dts⁄ts tζ ts⌐ζdz⁄ uζ[ls⁄j ζ⊙B j dz USB-
ζtsdz⁄j dts⁄tα⊙ls⁄ts⁄tα⊙, frj⁄j H ⊙[dz⁄ h ⊙[? dζ3s⁄dζ⁄[ls⁄ts⁄tα ⊙[1 ζ, L⊙ls⁄j dζ3 ts B dts⁄⊙ ⊙[ls⁄j H ⊙[frj j ls⁄j tα
lzfrjstαts?frjso 1 ζ (1 lzfrj > 1 ⊙frjstαts?ζ⊙ > 1 ⊙dζ⁄dz lzfrjtα⊙B dζ⁄j dζ⁄[w > H ⊙[frj⁄j dζ3⊙ >
∫ B ts⁄dz⌐ H ts⊙ ⊙dζ⁄j > ⌠ ⊙[frj j ls⁄j tα lzfrjstαts?frjso > ∫ B dts⁄⊙ ⊙[ls⁄) ⊙[dζ⁄[tζ j tα⁄j L⊙ dts⁄dz L ⊙[ls⁄j 1 ζ.

ζ y B 1 ⊙] ⌐ H 9 ∫ ⊙ Y ⊙ 1 ζ 9 ⊙] 1 ⌐ l ∫ ⌠

υ j ⌠ dts⁄dts⁄dts⁄⊙[W ⊙[L ⊙ ts⁄ts⁄ts⁄⊙ dζ⁄j dζ⁄[w ⌐ ζ tζ ⊙dζ⁄j dζ⁄j ?

J : Y ls⁄ ts ls⊙ζ ts⁄j ⊙ ⊙[H ζ ts⁄ζ tα⊙[frj⁄j ⊙dζ⁄dζ⁄[ujdz⁄[j ⊙[ζ⁄ H ⊙[frj tζ dζ⁄j ?

J : ⌐ ⊙[H ζ ts⁄ζ tα⊙[frj⁄j ⊙dζ⁄dζ⁄[ujdz⁄[j ⊙[ζ⁄ H ⊙[frj tζ dζ⁄j ? (⌐ ζ⊙[ ) - ⌠ ls⁄ts tsζ ls⊙[ujdz⁄[j ζ tsζ⁄j lzfrjstαts?frjso ts, ζ ts ls⁄ts⁄ts⁄j
⊙[frj tζ tsdz L lzj ls frj w H dz w ts ls⁄ts B tα⊙ j dζ⁄[w frj[dζ3 ts dts⁄ts 9, tζ tα⁄j H frj⁄j ⊙ dζ⁄j dζ⁄dz ⌠ 9 W tstα⁄dζ3⊙ls⁄j ASCII
(ϕ dζ3j tα⊙[ζ⊙dζ⁄j ζ⁄[⊙[frj⁄j ⊙dζ⁄ ⊙ dts⁄dz ζ ζ ts⌐ H tsB dζ3j dζ⁄j 9 ⊙[dζ⁄ W tstα⁄dζ3⊙uζ[j ζ⁄), 9 ls⊙ζ⊙[⌠ uζ[W tα⁄s r ⌠
lzfrjstαts?frjso⊙ζ⁄, ζ⊙ζ ⌠ dζ3j ζ ls⁄ts⁄ts⁄dz⁄dz j uζ⊙frj , ζ⊙dz ζ lzdz W ls⁄ts⁄tα , tζ j tα⁄j dts⁄frj dz j ⊙[dζ⁄ts⁄s r j
tζ tα⊙[frj⁄j ⊙dζ⁄j ζ⁄[ls tζ. r ζ r 9r tζ tsdz⁄dζ3j dζ⁄tζ ls⁄j ⌠ dts⁄dts⁄dζ⁄[⊙[, ⊙[frj tζ tsdz L lzj dζ3s⁄ H dz w ⊙[L ⊙ ts⁄ts⁄ts⁄⊙ dζ3j dζ⁄[w
H ⊙[frj dζ3j 9 tζ ts⁄ts⁄ls⁄⊙[9dz ⌠ ζ⁄ts⁄dζ3 ⌠ ls⁄j ⊙ts⁄⊙ (ls⁄[tζ ⊙ "dts⁄dz⁄ls B lzζ") ⊙[H ⊙ts⁄dζ⁄[⌠ dζ3⊙dts⁄ls⁄⊙ B ⊙ ⊙ tα⊙[ls⁄dz ⌠
ζtsdζ3 ⌠ ls⁄j ⊙ts⁄⊙. 9 ζ⊙ζ ⊙[lzfrjstαts?frjso⊙, ⊙[L ⊙ ts⁄ts⁄ts⁄⊙ dζ3j dζ⁄dz j tζ ts ls⁄j ⌠ dts⁄dts⁄dts⁄⊙[⊙[dζ⁄ B ⊙ L j
frj j ls ts⁄⊙[L dz⁄ζ⁄⊙ h ⊙[⌠ H ⊙[ts H ts⁄⊙ ⊙[tζ dζ⁄⊙ L dζ3j dζ⁄dz ⌠ H ⊙[frj dζ3j j 9, r ζ r tζ ts L 9tsdz⁄j ls tζ tsdz⁄ζ⁄⊙ ls⁄

ʙtsdzj¸ ʅjlsʔdj¸ dʃtsʙtɑ⊙ɤj¸dzɑ[w, ʅjldʒʜdʃfnʃdzɑ dʃ⊗ʙ⊙L¸j ɤdzɑʔlstɑtsdzɑ⊗-dʒzʅjɑtsʔ lstɑzʙʔdʃ (ʔ∫ʊ). r ʂʃ tʃtslstɑ¸ʙdz¸jlsɑtstɑ⊙Lʜtsdʒjdzʰ¸j ɤdzɑtɑɑʃdʃ, ʅjldʒtʃdz⊙Ldʒjdzɑzʰ¸j ʜdʃfnʃdzɑ dʃ, tʃtsfnʃtsdzʔlzʃtɑɑʃdzɑʅdʃtʃ tɑ⊙ʙtslsʳ r ʂʃ tsfnʃdɑs⊙dzɑ⊗ʙdɑsʔdʃtɑtsɑʔ¸j dʃfnʃlzfnʃ⊙¸jdʒsɑtsfnp¸jlsʔ⊙ ⊙dɑ¸dɑ⊗⊙ʔlsɑʃɑdʃL⊙ʅdʃdʃ dʃL dzʅjdzɑ[w.

J : ʏ¸jdʒtslsɑzʃʅ⊙ˣ lsfnʃʷ r ʂʃ fnʃtʃ⊙fnfnʃɑdzɑs? dʒ⊙lstɑʃʅj¸? tslsr ʂʃ fnʃ⊙ʔlsɑʃɑdzɑs? dʒ⊙lstɑʃʅj¸??

∫ : r ʂʃ dʃL dtslsʔ⊙ɑdzʃɑ⊙ˣ lsfnʃtʃ⊙fnfnʃɑdzɑs? dʃdzʃ ⊙ʔlsɑʃɑdzɑs? dʒ⊙lstɑʃʅj¸?. J ⊙ʔlsɑʃɑdzɑs? dʒ⊙lstɑʃʅj¸ dʃ⊗tʃtsL dʃʅdʃdʃ ʔ⊙ɤHtsdtstʃdʃʔfnj¸dzʷ lzfnʃs⊙dzɑsɑ dʒ¸dzɑlstɑ⊙dzɑdʃfnʃlstɑ, tʃtslstɑ¸ʙdzʷˢ ʰ dʃ? dʒ¸dzʰ¸j lstsʔ⊙Hdzʷ tɑ¸jɑzɑdzʃtɑtsɑ⊙ʔdʃʷtɑʔtsfnʃsʃ ɤdzɑdʒ¸dzɑs⊙dʃLtsʙtɑ⊙ɤj¸dzɑʃʷ. J tsɤlstsʔ tʃtɑɑʃʅdʃdʒ¸ lstsʔ ɑ Hdʃfnʃdzɑ¸j fnʃ⊙ʔlsɑʃɑdzɑs? dʒ⊙lstɑʃʅj¸? dʒtsɤj¸jlstʃ¸j¸tɑ¸jʔdzʷ ʅ⊙lsʳ fnʃʷ fnʃʙtsdzʰ ¸j? ʅ⊙fnʃstslstsʔ, ɑ tɑ¸jLzdzʔlsɑ⊙lsʃ¸ ʅjldtslzdtzʅʰ ⊙¸jlsfnʃʷ ɑtɑ¸jdʒʷ tɑ¸jɑʃ¸jdzɑtɑ⊙ʅdʃdʃ dʃL dtsʙtɑ⊙ɤj¸dzɑʃʷ dʃ⊗ɤʔtɑ⊙dzɑ (ɑ ʅ⊙fnʃsdtsfnʃsʃ, ʔlztɑfnʃstɑ dʒʰ dʃʙtsdzɑ¸j tʃdʃ⊗ɑdtstʃ¸jtɑ¸jdʒɑʰ ⊙¸jlsfnʃʷ tʃtsɤʔtɑ⊙dtz). r ʂʃ fnʃ tʃ⊙fnfnʃɑdzɑs? dʒ⊙lstɑʃʅj¸? fnʃsH¸jtɑ⊗ɤdʃlsfnʃ¸lsʔlzʃtɑtsɑ⊗tsHdzɑʔtsɑ fnʃtʃdʔfnʃ¸dzʷdʒʃ, tɑ⊙Ldʒjʰ¸j dzɑtz dʒʃ ɑ ʔ⊗ɤHtsdʒʅzLdzɑ fnʃ¸lsʔdʃ.

J : ʂ⊙ʔtsɑʳ tʃtɑ¸jdʃdʒzʰ¸j fnʃsɑ⊙r ʂʃ fnʃlstsdʔtsʃdzɑ¸dtsʅdtz dʒʃ lstɑ⊙dtzdʃfnʃststɑ⊙dʒʃ tʃtsfnʃɑ⊗ɑdzɑdzʰˢ fnʃ ʔ∫ʊ?

∫ : J dʒtsdzɑʃlststɑ¸ dʃ⊗ʙ⊙L¸j ʔ∫ʊ ɤdzɑʔlstɑtsdzɑtz ? tʃtɑtsɤj¸jʔlststɑ¸ɑ¸jdzɑtɑʃtɑtzj¸lsɤdzɑʔlstɑtsdtz dʃ tsfnʃdtsɑ⊗dtsʔ fnp¸jlstsɑ⊗tsʔ dtzʅjɑ tɑ¸jLzdzʔlsʔlsj¸ ʙtsdʒʙ⊙tɑHdʃtɑtsɑ⊗ʔdʃ dtzʷ dʒʃdzɑfnʃ¸j¸dtsdtsʔ lstɑzʙʔdʃ tʃtsdzʷtɑʃLtsɑ⊗⊙dtztz dʒʃɤdzɑʔlstɑtsdtʔdʒʃ. J tsɤlstsdʒzdʒtsdzɑʃlststɑʳ dʃ⊗ʙ⊙L¸j ʔ∫ʊ tɑ⊙ʙtslsʔˣ lsɑ tsfnʃdtsɑ⊗dtsdʒfnʃ⊙dtʔdtsdtsɑʳ dʒfnʃʃdtʔdtsdʒʔtɑ⊙fnʃdtsdts, L¸jdzj¸dtsdts dʃfnʃʃdzj¸dts ʅpj¸jlstsɑ (R, G, B). ∫ tsdzɑʃlststɑfnr ʂʃ fnʃlstsdʔtsʃdzɑ¸dtsʅdtz dʒʃ lstɑ⊙dtzdʃfnʃststɑ⊙dʒʃ - ɤlstslzfnʃstdts?fnʃsɑ⊗ts, tslstsʙtɑ⊙ɤ⊙ʰ ¸j¸j ɑ⊗tsHdtsj¸ dʃLtsʙtɑ⊙ɤj¸dzɑʃj¸ fnʃtʃtsdʒʰˢ ʳˢ ɤdʃHʔtsʔtɑʃfnʃsʃ⊗dzdzʅjfnʃʔtsʔ tʃ⊗dzj¸dzʅ. ʊtsdʔtsʃdzɑ¸dtsʅdtz ʔ lstɑ⊗dtzdʃfnʃststɑ dʃdʒ¸jlsfnʃstdzʔlstztdz, tslsdzʅjdtzˢ tslsfnʃstdzʔlstztɑʳ ʔ∫ʊ:ʔ⊗ɤHʳ ʔ ɤdzɑdʒ¸dtsdʃdʒ¸jlsfnʃstdzʔlstztdz ⊙ʔlsɑʃɑdzɑs? dʒ⊙lstɑʃʅʃ dʃdzɑ¸L⊗dʃfnʃdʒʰ ¸j ⊙ʔlsɑʃɑdtz ¸j ɤdzɑdʒ¸dtsʳ . r ʂʃ fnʃlstsdʔtsʃdzɑ¸dtsʅdtz dʒʃ lstɑ⊗dtzdʃfnʃststɑ⊗dʒʃ fnʃsH¸jtɑ⊗ɤdʃlsHɑ¸j fnʃs¸jʔdzʷdztz ¸j tʃ⊗dzɑ¸dzʃ, tʃtɑtsfnʃstɑ⊗dtʃsɑ⊗tsdʒ¸jɤHlzʔtslststɑʳ dʒʃ¸LOʃtsdztzɑ¸dtsɑ⊗ɤdʃHʔdʃdʒ ʔtɑʃfnʃsʃ⊗dztsdʒ [fnpzʃʔ⊗ɤHʳ ʔ ɤdzɑdʒ¸dtsɑtʃtsHfnʃs¸jHʃdzɑ¸dtzʔ ɤdzɑʔlstɑtsHʔ⊗dʒʃdʃ dʔ⊗dzɑ¸dtsɑtʃtsH⊗dtsɑ dʔ⊗ʃtɑʷɤj¸dzɑʃj¸, dʒtsdzɑʔlzdzʷtɑdʔ⊗ʷ fnʃstdzʔlstztɑ⊗ɤdʃHʔtsdtsʔtɑʃfnʃsʃ⊗dztzʔ⊗dʃLdʒ¸jdzʷ¸jlsfnʃʷ, ɑ tɑ¸jLzdzʔlsʔlsj¸ ʅjldtstɑ¸dtsdzʃtɑtsɑ⊗dzʃ¸jlsfnʃʷ ʔtsdzʃʅjfnʃsɑ⊗tsʃtʃtsfnʃstzʃ⊗ˣ ʰ ¸jdtsfnp¸jlsʔ⊗Hdzʷ ʷʷ tstɑdʒʃtɑtsɑ⊗dzɑʃʷ dʃLtsʙtɑ⊗ɤj¸dzɑʃʔ. r ʂʃ fnʃlstsdʔtsʃdzɑ¸dtsʅdtz dʒʃ lstɑ⊗dtzdʃfnʃststɑ⊗dʒʃ dʃdʒ¸jlsɑ tɑʷH tʃtɑ¸jdʃdʒzʰ¸j fnʃsɑ⊗ tʃtsfnʃɑtɑ⊗dʒ¸dzɑˢ fnʃ ʔ∫ʊ, tʃtsfnʃtsdzʔlzr ʂʃ dʒtsɤdtsdʃLdtslstsɑ⊗dʃlsʳ ʙtsdzɑ¸j tʃdtsfnʃʔdʃdʒ ⊙dʃLtsʙtɑ⊗ɤj¸dzɑʃj¸ dʃ⊗dzɑ¸dʒ¸dzɑ dʒ¸jtɑ¸jʅ⊙¸jlsɑ fnʃdtzlstsdts, ʅjlstsdʃLtsʙtɑ⊗ɤj¸dzɑʃj¸ ʷʷ tstɑdʒʃtɑtzj¸lsfnʃʷ dzɑ¸ dʒ¸jlstsɤHtsdʒtɑ⊗L¸ɑ¸jtɑtsʔdʃ.

J : ɤ tsʅj¸dʒzʅ⊗fnʃstslstsʔ⊗ʔ⊗ɤHtɑtsɑ 60 ¸ɤʅ tstʃlstsʃdʒ⊗dtz dʃ⊗ʜdzʷ dʒtsdzɑʃlststɑ⊗fnʃr ʂʃ ?

∫ : J tslstdzʃʅdʃj¸ tslstsdʒtsdzɑʃlststɑ⊗dʃ⊗ʙ⊙L¸j ʔ∫ʊ r ʂʃ tʃ⊗dzɑ¸dtz fnʃlstsdʔtsʃdzɑ¸dtsʅdtz dʒʃ lstɑ⊗dtzdʃfnʃststɑ⊗dʒʃ dʃdʒ¸jlsʷʷ dʔfnʃtsdtsɑ⊗dzɑdzˢ tɑ⊙LtɑjʰO⊗ˣ ʰ lzˢ fnʃtʃtsfnʃsʙdtsfnʃsʃ. ɤ ⊙tʃtɑʃdʒ¸jtɑ¸ dʒtsdzɑʃlststɑ XGA dʃdʒ¸jlstɑ⊗LtɑjʰO⊗ˣ ʰ lzˢ fnʃtʃtsfnʃsʙdtsfnʃsʃ 1024x3 (R, G, B) x 768 tʃdʔfnʃ¸jdzj¸?, ⊙ʙtsdzj¸j ɑʳ fnʃsʔlzˢ tɑ⊙LtɑjʰO⊗ˣ ʰ lzˢ fnʃtʃtsfnʃsʙdtsfnʃsʃ dzj¸ɑtsLdʒsɤdtsdʒ¸jlstsɑ⊗dzʃtsɑ⊗lsʃ ʙj¸L htsʃtsdzdzʃlsj¸dz dtsʔ tʃtɑtsɑtɑ⊗dʒdʒdtsʔ tsʙtɑ⊗ʙtslsʔdʃ. ɤ ⊙dzj¸dz tɑ⊗fnʃ¸jʅdʃlsdʒdʃL⊗ʅdʃ⊗ dʔ⊗tsʃlsdʒdʒʃL⊗ʅdʃˢ dʃLtsʙtɑ⊗ɤj¸dzɑʃʷ Hdzʷ fnʃdʔtsdzdʃL⊗ʅdʃdʃ lstsʅj¸ʔ dʔ⊗ʅ⊗fnʃstslstsj 65 ∫ ¸ɤʅ - fnʃs⊗dzɑ⊗tɑdsdtsʔ Hdzʷ Hdʃfnʃdzj¸j ɑ XGA. ɤ tsfnʃtsdzʔlzʅ⊗fnʃstslstsʳ ʔ⊗Htɑtsɑ dʃfnʃstɑtsʔ Hdzʷ lsʔ⊗tsʔ ʅ⊗fnʃstslstsʳ fnʃdʔtsdzdʃL⊗ʅdʃdʃ lstsʅj¸ʔ fnʃsfnʃs⊗dzʷˢ lsfnʃstslstsɑ¸jlsfnʃsɑ¸jdzdtsʔ 60 ¸ɤʅdʃ 48 K¸ɤʅ, tsʃlsdʒ⊗dzdtsʔ ʅ⊗fnʃstslstsʔ Hdzʷ lsʔ⊗tsɑtsdʒtsdzdʃlststɑ⊗ʷɑdzʷ¸jlsfnʃʷ 60 ¸ɤʅ.

J : ʂʔ⊗tsɑ⊗lsj¸ʔ⊗dtsdtsɑdʃʷ Htsfnʃsdʃ⊗¸jdzdʃʷʰ dʃtɑtsʔtsɑtsʅzdzdʔ⊗tsʙLtstɑ⊗? ʂʔ⊗ʔtsdʔ⊗tɑ¸jʔ⊗dzdʃLʅzj¸lsfnʃʷ?

A: r ¸ s ¡ ¡ ¡

Ţ : ∫ lso¿ıu{Q¿ıslsdz[dz¿tsdz¿ıslstsıtc fnır ş[tsBh d[dz fnjsOdzaOtdsOdz B¿ıLtstſOfnjtzsfnjs[?

∫ : ı O.∫ tsdz¿ıslstsıc fnır ş[Philips fnjstslso¿ıslsfnjso¿lz˝ lslz˝CO.Ldz¿w dz MPR-II d[fnjsOdzaOtdsOdz TCO 99/03 tſts tc¿ıdzdz[tdtso Odz¿˝ d[ıLdzu¿ıdz¿w, ı dz¿ ˝Clstdtsdz OdzıslsdZ dz tſtsdZw dz fnjdz¿ı¿ıdz¿˝ ı dz¿ıtdtstſtslstc¿ıB dz¿ıdz¿w, ı dz¿ ˝Clstdtsz¿ıLtstſOfnjtzsfnjs[ə tcOBtsu¿ı? fnjc¿ıHı¿ d[tſtc[dts+dtzsfnjs[˝ tſ¿ıtc¿ıtcOBtslsˇ¿ıHdZw ə lststc[ıudtzsdts d[fnjſtsdz LtsOdz¿w. ı O tslsHı¿dz dtzs? fnjstcOdz¿ıu¿ıtſtsHtdtsB dtzs tſ¿ıtc¿ıu[fnjdz¿ıdZ fnjsOdzaOtdsr B¿ıLtstſOfnjtzsfnjs[.

ı tsHtdtsB dZ¿ı fnp¿ıH¿ıdz¿w tſtc[ə¿ıH¿ıdZ¿ ə GdzOə¿ı ı tstdz¿Ols d[ə dZ¿ı Htsˇ˝Clzdz¿ıdtzsr .

Ѓ ј tcr
в ј L tsЃ Оfrjdtksfrjsc{,
tЃ tsc{frЃ- c{
lzfrjstcОdzj dzk{ј
dzj c{frjЃ tcОЭ dtksfrjsj ?
Y Оfrjsts
Эts L dzk{ЃОЭ h c{ј
Эts Ѓ tcts frj
Ѓ В h c{ј
tЃ tcts В dzj dЗ
ї tcts В dzj dЗ tЃ tcc{
W W ts tcc dЗ Ѓ tcts Э Оdzk{c{
c{ L ts В tcОЭ ј dzk{W
ї ts tcc dЗ Оlsc{Эdz ј
H ts Ѓ lzc dЗ ј dtks
Г tdzcc{ј
dzj ts В ЂЃ ts H c{dЗ ј
frЭ ј H ј dzk{W

ї ts c{frЃ- c{ lzfrjstcОdzj dzk{ј dzj c{frjЃ tcОЭ dtksfrjsj ?

ї Оlsts? frjstcОdzk{ї ј ts Ѓ c{frЭОdz dzj c{frjЃ tcОЭ dtksfrjsc{, Ѓ ts l sts tcr ? tЃ ts dz L ts Э Оlsj dz dЗts ј ј ls lzfrjstcОdzk{ls frЭОdЗtsfrjsts W lsj dz dtks. Г frЭdz{ tЃ tcts В dzj dЗ Оdzj lzfrjstcОdzj dzk tЃ ts frЭdzj lsts ts, ЃОЃ. J r tЃ tcc{dЗj dzk{dz{ Эr h ј tЃ tcj H dtks ј dzk{dz ј tcj h ј dzk{W, ts В tcОlsc{lsj frj Ѓ tЃ tcj H frjs Э c{lsj dz frЭdz ј В r tЃ ts tcОВ ts lsj frj tЃ ts dz L ts Э Оlsj dz W dЗc{ Phillips.

Ѓ В h c{ј tЃ tcts В dzj dЗ	
ї ј c{frjЃ tcОЭ dtksfrjs	ї tcts Эj tcr lsj frЭdzj H lz h ј ј
ї ј ls c{L ts В tcОј ј dzk{W (ї ј dts tcc{ls frЭ ј lsts H c{ts H dz ? c{dzk c{ЃОlsts tc tЃ c{ls Оdzk{W)	• U В ј H c{lsj frj Э lsts dЗ ї{sts frj ї lsj Эts? ЃОВ ј dz frj ts H dtksdts Ѓ ts dz ї{Оtj ts H frjsj H c{dzj dzk frj ї lsj Эts? tcts L ј ls Ѓ ј, Оfrj H tdzdts dts Ѓ ts dz ї{Оj - Ѓ c dzj L H lz dtk L ОH dzj ? tЃ Оdzj dz{ dЗts dzk{lsts tcО. • U H dtk ї{Оdz Ѓ dtks tЃ ЃОЭ Ѓ dz ї{ ј dzk{W tЃ c{lsОdzk{W, tcОL dzj h ј dzk dtk W dtk tЃ ј tcj H dzj ? tЃ Оdzj dz{ dЗts dzk{lsts tcО, H ts dz ї{ dtk В r ls Э tЃ ts dtks ј ј dzk{c{ OFF (J З ЂS J), Оtj ts frЭdzj dtk ї Оlsc{W - Э tЃ ts dtks ј ј dzk{c{ ON (J ЂS J).
ї ј ls c{L ts В tcОј ј dzk{W (ї ј dts tcc{ls W dtks Оtc dz ? c{dz{ ј ј dtks r ? frЭ ј lsts H c{ts H dz ? c{dzk c{ЃОlsts tc)	• U В ј H c{lsj frj Э lsts dЗ ї{sts Ѓ ts dЗ tЃ J r В lsj tc ЭЃ dz ї{ ј dz. • U В ј H c{lsj frj Э lsts dЗ ї{sts frЭ c{dtk dz dz ? ЃОВ ј dz tЃ tcОЭ c{dz dtks tЃ ts H frjsj H c{dzj dzk Ѓ ts dЗ tЃ J r В lsj tdz. • ї tcts Эj tcr lsj ЃОВ ј dz dЗts dzk{lsts tcО dtk tslsfrjzlsfrjsЭ c{j tЃ j tcj Э c{В ts Э. • J ts L dЗts ј dtks, ОЃ lsc{Э c{L c{tcts ЭОdtk W lzdtk ї{c{W J dzj tcdts frЭ В j tcj ј ј dzk{W.
ї Оlsj Ѓ tcОdzj ts lsts В tcОј Оj lsfrjW frjstsВ h ј dzk{ј ВНИМАНИЕ НЕТ ВИДЕОСИГНАПА	• U В ј H c{lsj frj Э lsts dЗ ї{sts ЃОВ ј dz dЗts dzk{lsts tcО tЃ tcОЭ c{dz dtks tЃ ts H frjsj H c{dzj dzk Ѓ ts dЗ tЃ J r В lsj tdz. (H dЗ lsОЃ ј Ѓ tcОlsЃ ts j tdz Ѓ ts Эts H frjsЭ ts tЃ ts dtk frjstcts? Ѓ j .) • ї tcts Эj tcr lsj ЃОВ ј dz dЗts dzk{lsts tcО dtk tslsfrjzlsfrjsЭ c{j tЃ j tcj Э c{В ts Э. • U В ј H c{lsj frj Э lsts dЗ ї{sts Ѓ ts dЗ tЃ J r В lsj tc ЭЃ dz ї{ ј dz

ş dbstf ş ⊙ AUTO dbj tcO ɜ tslsO j l s H t s d b z	dz dz ɜ tsɜ tcO L t s d ɜ
	• ∧ l z d b ş u d w Auto tf t c j H d b O L d b O u j d b H d b w c f r f j f t s d b z L t s ɔ O d b z w ə f r j s O d b a O t d s d b s d ɜ Macintosh- c f d b z IBM-f r j s ɔ d ɜ j f r j s c f d ɜ t s d ɜ ⊥ ş , ə ş t s l s t s t d s d ɜ t f t c d ɜ j d b w j l s f r j w f r j s t s l s ɔ j l s f r j s ɔ l z ˢ ʰ ⊙ w ə j t c f r p j w t s f j t c O u d t s d b b s ? f r p j f r j s j d ɜ Microsoft Windows. • ş l s ⊙ w w l z d b ş u d w d ɜ t s ⊥ j l s d j t c O ɜ t s l s ⊙ l s f t c d c f r f j f t s d b z L t s ɔ O d b z d c d j f r j s O d b a O t d s d b z ⊥ ⊥ ⊥ ş c f d b z ə d c H j t s ş ⊙ t d s .
⊥ t d t s ɜ d j d ɜ f t c d w w t s t d ɜ p d t d t s ɔ O d b z d c d L t s ɜ t c O ⊥ j d b z w	
⊥ j t f t c O ə d c f d b z d b s j t f t s d b s ⊥ j d b z j c L t s ɜ t c O ⊥ j d b z w d b ⊥ ş t c O d j H d c f r f j f d j w	• ⊥ O ⊥ d ɜ p c f l s j ş d b s f ş l z Auto. • j l s t c j d z d b z p t d z ? l s j t f t s d b s ⊥ j d b z j c L t s ɜ t c O ⊥ j d b z w, c f r f j f t s d b z L l z w t f O t c O d ɜ j l s t c Phase/Clock (∧ O L O ⊙ Y O r j s t s l s O) ə t c O L H j d j More Settings (⊥ t s f t s d b z b z j l s j d b z d b j t f O t c O d ɜ j l s t c) ⊥ ş t c O d b b s d t s d ɜ j d b j t f O t c O d ɜ j l s t c .
⊥ t d t s ⊥ O d b z j c L t s ɜ t c O ⊥ j d b z w d b ⊥ ş t c O d j	• U B j H d c f l s j f r j ə l s t s d ɜ u s t s f r p j c d b b d b z d b ? ş O ɜ j d b t f t c O ə c f d b z d b s t f t s H f r j s j H c f d j d b ş t c O w c f u j f r j ş t s ? t f d b O l s j c f d b z f ⊥ ş .
ş j t c u O d b z j c L t s ɜ t c O ⊥ j d b z w t f t s ə j t d s c f ş O d b z f	• ⊥ O ⊥ d ɜ p c f l s j ş d b s f ş l z Auto. • U f r j s t c O d b z j l s j ə j t d s c f ş O d b z d b j t f t s d b s f r j , c f r f j f t s d b z L l z w t f O t c O d ɜ j l s t c More Settings (⊥ t s f t s d b z b z j l s j d b z d b j d b b f r j s t d s ? ş c f) ə t c O L H j d j Phase/Clock (∧ O L O ⊙ ⊔ c f d b b t d s d b z j L O u c f w) ⊥ ş t c O d b b s d t s d ɜ j d b Main Controls (ş f r p j b s ə d b j t f O t c O d ɜ j l s t c).
ş j t c u O d b z j c L t s ɜ t c O ⊥ j d b z w t f t s d t s t d c f L t s d b s O d b z f	• ⊥ O ⊥ d ɜ p c f l s j ş d b s f ş l z Auto. • U f r j s t c O d b z j l s j ə j t d s c f ş O d b z d b j t f t s d b s f r j , c f r f j f t s d b z L l z w t f O t c O d ɜ j l s t c More Settings (⊥ t s f t s d b z b z j l s j d b z d b j d b b f r j s t d s ? ş c f) ə t c O L H j d j Phase/Clock (∧ O L O ⊙ ⊔ c f d b b t d s d b z j L O u c f w) ⊥ ş t c O d b b s d t s d ɜ j d b Main Controls (ş f r p j b s ə d b j t f O t c O d ɜ j l s t c).

⊎ dbzqh ⊆tsdz3wtaΩqΩ? qΩdbzΩ fmpbzqh ⊆tsdz3lsj dz3dbz? ⊥ ⊆taΩdbz	• ⌠ lstcj dbzdbzΩtdbz?lsj ⊆tsdbstaΩfmjsdbsfmjs qΩ wtaΩtsfmjs fmjtΩtsdz3sh ⊥ ⊥ tcj dbzdbzΩtdbsa tsΩ, ⊥tsfmjsdbzΩ ⊆ ⊆tslstsstar dz3tsfmjzh j fmjsa dbzw j lsfmjw qΩL ⊥ ⊆taΩdbzbsdbs dz3j dbz MAIN CONTROLS. (⊎ qΩfmjsj dz3ΩLΩ⊥dbz? tΩts⊥fmpj lsΩqΩ dz3sdbzΩlstsstaΩ fmjr ⌡r qΩ dz3j j lstsdbaΩdbzΩuj dbzbz? fmjdbsΩ fmpbz>Br . ⌡tsd⊥ΩΩ⊥taΩdbzfmjsΩdbsa qΩlsfmjw lsj dz3dbz dz3qΩ dz2ΩuΩdz2j lsdz3j tcuΩlsr , tsBtaΩlsaΩlsj fmj ⊆ dz3j fmjsdbsdz tsw qΩuΩΩdbz dbsdz3z ⊥qΩdzj tdbz Philips.
⊥ tswadbwj lsfmjw tsfmjsΩlstsuΩbsj qΩLtsBtaΩ>j dbzΩj	⌡ fmpbzΩ qΩLtsBtaΩ>j dbzΩj tsfmjsΩj lsfmjw dz2⊥taΩdbz a lsj uj dbzΩj tΩtdbs⊥tsdbz qΩlsj dbz dbsdbs atcj dz3j dbzΩ, tsdbs dz3s>j j lstΩtdbsΩj fmjsΩ ⌡ wtsdz3Ωtdbsa ΩdbzΩ tslstΩj uΩlsΩ dz2⊥taΩdbz qΩtsBtaΩLtsaΩdbzΩ tsfmjsΩlstsuΩbsdbs qΩLtsBtaΩ>j dbzΩw. ⌡ fmjsΩlstsuΩbsj qΩLtsBtaΩ>j dbzΩj tsBr uΩbs qΩfmjuj LΩj lsfmjlzfmjsw dzj fmj⊆tsdbz ⊆ts uΩfmjsa.
⌡ fmjsΩlstsuΩbsj qΩLtsBtaΩ>j dbzΩj tsfmjsΩj lsfmjw tΩtsfmpbzj ar ⌡dbz uj dbzΩw tΩqΩlsΩdbzΩw	⌡ lstsΩ⊥ΩtaΩ⌡lsj tadbs ⊥dbzw >qΩ⊥⌡qΩ⊥ ⌡taΩfmjsΩdbzbsa qΩ dzj tsBlzfmpbsa dzj dbs fmpstwdz3Ω qΩdbzΩ lz⊥lz⊥h j dbzΩj dz3⊥ΩtaΩ⌡lsj taΩfmjsΩ⌡ >qΩ⊥⌡qΩ⊥ ⌡taΩfmjsΩdbzbsa. ⊎ tΩlzfmjsw tsΩtcj ⊥j dzj dbzbsj atcj dz3w tsfmjsΩlstsuΩbsj qΩLtsBtaΩ>j dbzΩj tsBr uΩbs qΩfmjuj LΩj lsr
⌠ Ω⊥ ⌡taΩdzj tsfmjsΩk lsfmjw Lj dzj dbz j, ⌡taΩfmpbz j, fmpΩdbzΩj, lsj dz3bz j qΩ Bj dbz j lstsuΩqΩ	⌡ fmjsΩlstsuΩbz j lstsuΩqΩ - ⊥ lstsr dbstadz3Ωdbz dbsj wadzj dbzΩj ⊥dbzw >qΩ⊥⌡qΩ⊥ ⌡taΩfmjsΩdbzbsa, qΩLatslsΩadbzΩaΩj dz3 ⊥ tΩtsqΩdz3j r h j ?fmjw dz2Ω fmj atsdbzh dbzΩ? ⊥j dbz lsj ⊥dbsdbsaΩqΩ.
⌠ tsΩtsdbzbzΩlsj dbz dbzk tΩtsdbzuΩqΩlsr a ⌡ j dbstaΩ⊥ qΩdbz tstadz3Ωuj qΩqΩ ⊥dbzw tΩtslstcj BqΩlsj dzj ? qΩ fmpwLΩh qΩfmj fmjtΩtcj ⊥fmjsΩaΩlsj dbz fmjsaΩdz3Ω fmj taaΩfmpbs? fmpbz>Br ⌡tsdz3Ωdbz Philips.	

- TCO'03 Information
- Recycling Information for Customers
- Waste Electrical and Electronic Equipment-WEEE
- CE Declaration of Conformity
- Energy Star Declaration
- Federal Communications Commission (FCC) Notice (U. S. Only)
- Commission Federale de la Communication (FCC Declaration)
- EN 55022 Compliance (Czech Republic Only)
- MIC Notice (South Korea Only)
- Polish Center for Testing and Certification Notice
- North Europe (Nordic Countries) Information
- BSMI Notice (Taiwan Only)
- Ergonomie Hinweis (nur Deutschland)
- Philips End-of-Life Disposal Information for UK only
- China RoHS
- Troubleshooting
- Other Related Information

Regulatory Information

Model ID:200WP7
Model No:HWP7200P

TCO'03 Information

Congratulations!
The display you have just purchased carries the TCO'03 Displays label. This means that your display is designed, manufactured and tested according to some of the strictest quality and environmental requirements in the world. This makes for a high performance product, designed with the user in focus that also minimizes the impact on our natural environment.

Some of the features of the TCO'03 Display requirements.

Ergonomics

- Good visual ergonomics and image quality in order to improve the working environment for the user and to reduce sight and strain problems. Important parameters are luminance, contrast, resoluction, reflectance, colour rendition and image stability.

Energy

- Energy-saving mode after a certain time-beneficial both for the user and the environment
- Electrical safety

Emissions

- Electromagnetic fields
- Noise emissions

Ecology

- The product must be prepared for recycling and the manufacturer must have a certified environmental management system such as EMAS or ISO 14 000
- Restrictions on
  - chlorinated and brominated flame retardants and polymers
  - heavy metals such as cadmium, mercury and lead.

The requirements included in this label have been developed by TCO Development in co-operation with scientists, experts, users as well as manufacturers all over the world. Since the end of the 1980s TCO has been involved in influencing the development of IT equipment in a more user-friendly direction. Our labelling system started with displays in 1992 and is now requested by users and IT-manufacturers all over the world.

•Frequently Asked Questions (FAQs)

For more information, please visit
www.tcodevelopment.com

RETURN TO TOP OF THE PAGE

Recycling Information for Customers

Philips establishes technically and economically viable objectives to optimize the environmental performance of the organization's product, service and activities.

From the planning, design and production stages, Philips emphasizes the important of making products that can easily be recycled. At Philips, end-of-life management primarily entails participation in national take-back initiatives and recycling programs whenever possible, preferably in cooperation with competitors.

There is currently a system of recycling up and running in the European countries, such as The Netherlands, Belgium, Norway, Sweden and Denmark.

In U.S.A., Philips Consumer Electronics North America has contributed funds for the Electronic Industries Alliance (EIA) Electronics Recycling Project and state recycling initiatives for end-of-life electronics products from household sources. In addition, the Northeast Recycling Council (NERC) - a multi-state non-profit organization focused on promoting recycling market development - plans to implement a recycling program.

In Asia Pacific, Taiwan, the products can be taken back by Environment Protection Administration (EPA) to follow the IT product recycling management process, detail can be found in web site www.epa.gov.tw

For help and service, please contact Consumers Information Center or F1rst Choice Contact Information Center in each country or the following team of Environmental specialist can help.

Mr. WY Chen- Environment manager
Philips Multimedia Flat Display
E-mail: w.y.chen@philips.com
Tel: +886 (0) 3 222 6791

Mr. Maarten ten Houten - Senior Environmental Consultant
Philips Consumer Electronics
E-mail: marten.ten.houten@philips.com
Tel: +31 (0) 40 27 33402

Mr. Delmer F. Teglas
Philips Consumer Electronics North America
E-mail: butch.teglas@philips.com
Tel: +1 865 521 4322

RETURN TO TOP OF THE PAGE

Waste Electrical and Electronic Equipment-WEEE

Attention users in European Union private households

This marking on the product or on its packaging illustrates that, under European Directive 2002/96/EG governing used electrical and electronic appliances, this product may not be disposed of with normal household waste. You are responsible for disposal of this equipment through a designated waste electrical and electronic equipment collection. To determine the locations for dropping off such waste electrical and electronic, contact your local government office, the waste disposal organization that serves your household or the store at which you purchased the product.

RETURN TO TOP OF THE PAGE

CE Declaration of Conformity

Philips Consumer Electronics declare under our responsibility that the product is in conformity with the following standards
- EN60950-1:2001 (Safety requirement of Information Technology Equipment)
- EN55022:1998 (Radio Disturbance requirement of Information Technology Equipment)
- EN55024:1998 (Immunity requirement of Information Technology Equipment)
- EN61000-3-2:2000 (Limits for Harmonic Current Emission)
- EN61000-3-3:1995 (Limitation of Voltage Fluctuation and Flicker)

following provisions of directives applicable
- 73/23/EEC (Low Voltage Directive)
- 89/336/EEC (EMC Directive)
- 93/68/EEC (Amendment of EMC and Low Voltage Directive)

and is produced by a manufacturing organization on ISO9000 level.

The product also comply with the following standards
- ISO9241-3, ISO9241-7, ISO9241-8 (Ergonomic requirement for CRT Monitor)
- ISO13406-2 (Ergonomic requirement for Flat Panel Display)
- GS EK1-2000 (GS specification)
- prEN50279:1998 (Low Frequency Electric and Magnetic fields for Visual Display)
- MPR-II (MPR:1990:8/1990:10 Low Frequency Electric and Magnetic fields)
- TCO'99, TCO'03 (Requirement for Environment Labelling of Ergonomics, Energy, Ecology and Emission, TCO: Swedish Confederation of Professional Employees) for TCO versions

RETURN TO TOP OF THE PAGE

Energy Star Declaration

This monitor is equipped with a function for saving energy which supports the VESA Display Power Management Signaling (DPMS) standard. This means that the monitor must be connected to a computer which supports VESA DPMS. Time settings are adjusted from the system unit by software.

	VESA State	LED Indicator	Power Consumption
Normal operation	ON (Active)	Green	<48 W

Power Saving Alternative 2	OFF (Sleep)	Amber	< 2 W
One step	Switch Off	Off	< 1 W

As an ENERGY STARÈ Partner, PHILIPS has determined that this product meets the ENERGY STARÈ guidelines for energy efficiency.

We recommend you switch off the monitor when it is not in use for a long time.

RETURN TO TOP OF THE PAGE

Federal Communications Commission (FCC) Notice (U.S. Only)

This equipment has been tested and found to comply with the limits for a Class B digital device, pursuant to Part 15 of the FCC Rules. These limits are designed to provide reasonable protection against harmful interference in a residential installation. This equipment generates, uses and can radiate radio frequency energy and, if not installed and used in accordance with the instructions, may cause harmful interference to radio communications. However, there is no guarantee that interference will not occur in a particular installation. If this equipment does cause harmful interference to radio or television reception, which can be determined by turning the equipment off and on, the user is encouraged to try to correct the interference by one or more of the following measures:

- Reorient or relocate the receiving antenna.
- Increase the separation between the equipment and receiver.
- Connect the equipment into an outlet on a circuit different from that to which the receiver is connected.
- Consult the dealer or an experienced radio/TV technician for help.

Changes or modifications not expressly approved by the party responsible for compliance could void the user's authority to operate the equipment.

Use only RF shielded cable that was supplied with the monitor when connecting this monitor to a computer device.

To prevent damage which may result in fire or shock hazard, do not expose this appliance to rain or excessive moisture.

THIS CLASS B DIGITAL APPARATUS MEETS ALL REQUIREMENTS OF THE CANADIAN INTERFERENCE-CAUSING EQUIPMENT REGULATIONS.

RETURN TO TOP OF THE PAGE

Commission Federale de la Communication (FCC Declaration)

Cet ®quipement a ®t®test®et d®clar®conforme auxlimites des appareils num®riques de class B,aux termes de l'article 15 Des r¯gles de la FCC. Ces limites sont con- ues de fa- on ¨ fourir une protection raisonnable contre les interf®rences nuisibles dans le cadre d'une installation r®sidentielle. CET appareil produit, utilise et peut ®mettre des hyperfr®quences qui, si l'appareil n'est pas install®et utilis®selon les consignes donn®es, peuvent causer des interf®rences nuisibles aux communications radio. Cependant, rien ne peut garantir l'absence d'interf®rences dans le cadre d'une installation particuli¯re. Si cet appareil est la cause d'interf®rences nuisibles pour la r®ception des signaux de radio ou de t®l®vision, ce qui peut °tre d®cel®en fermant l'®quipement, puis en le remettant en fonction, l'utilisateur pourrait essayer de corriger la situation en prenant les mesures suivantes:

- R®orienter ou d®placer l'antenne de r®ception.
- Augmenter la distance entre l'®quipement et le r®cepteur.
- Brancher l'®quipement sur un autre circuit que celui utilis®par le r®cepteur.
- Demander l'aide du marchand ou d'un technicien chevronn®en radio/t®l®vision.

Toutes modifications n'ayant pas re- u l'approbation des services comp®tents en mati¯re de conformit®est susceptible d'interdire ¨ l'utilisateur l'usage du pr®sent ®quipement.

N'utiliser que des c©bles RF arm®s pour les connections avec des ordinateurs ou p®riph®riques.

CET APPAREIL NUMERIQUE DE LA CLASSE B RESPECTE TOUTES LES EXIGENCES DU REGLEMENT SUR LE MATERIEL BROUILLEUR DU CANADA.

RETURN TO TOP OF THE PAGE

EN 55022 Compliance (Czech Republic Only)

This device belongs to category B devices as described in EN 55022, unless it is specifically stated that it is a Class A device on the specification label. The following applies to devices in Class A of EN 55022 (radius of protection up to 30 meters). The user of the device is obliged to take all steps necessary to remove sources of interference to telecommunication or other devices.

Pokud není na typovém štítku počítače uvedeno, že spadá do do třídy A podle EN 55022, spadá automaticky do třídy B podle EN 55022. Pro zařízení zařazená do třídy A (chranné pásmo 30m) podle EN 55022 platí následující. Dojde-li k rušení telekomunikačních nebo jiných zařízení je uživatel povinnen provést taková opatřgní, aby rušení odstranil.

RETURN TO TOP OF THE PAGE

MIC Notice (South Korea Only)

Class B Device

장치 종류	사용자 안내문
B급 기기	이 장치는 가정용으로 전자파 적합등록을 한 장치로서 주거지역에서는 물론 모든 지역에서 사용할 수 있습니다.

Please note that this device has been approved for non-business purposes and may be used in any environment, including residential areas.

RETURN TO TOP OF THE PAGE

Polish Center for Testing and Certification Notice

The equipment should draw power from a socket with an attached protection circuit (a three-prong socket). All equipment that works together (computer, monitor, printer, and so on) should have the same power supply source.

The phasing conductor of the room's electrical installation should have a reserve short-circuit protection device in the form of a fuse with a nominal value no larger than 16 amperes (A).

To completely switch off the equipment, the power supply cable must be removed from the power supply socket, which should be located near the equipment and easily accessible.

A protection mark "B" confirms that the equipment is in compliance with the protection usage requirements of standards PN-93/T-42107 and PN-89/E-06251.

Wymagania Polskiego Centrum Badań i Certyfikacji

Urządzenie powinno być zasilane z gniazda z przyłączonym obwodem ochronnym (gniazdo z kołkiem). Współpracujące ze sobą urządzenia (komputer, monitor, drukarka) powinny być zasilane z tego samego źródła.

Instalacja elektryczna pomieszczenia powinna zawierać w przewodzie fazowym rezerwową ochronę przed zwarciami, w postaci bezpiecznika o wartości znamionowej nie większej niż 16A (amperów).

W celu całkowitego wyłączenia urządzenia z sieci zasilania, należy wyjąć wtyczkę kabla zasilającego z gniazdka, które powinno znajdować się w pobliżu urządzenia i być łatwo dostępne.

Znak bezpieczeństwa "B" potwierdza zgodność urządzenia z wymaganiami bezpieczeństwa użytkowania zawartymi w PN-93/T-42107 i PN-89/E-06251.

Pozostałe instrukcje bezpieczeństwa

- Nie należy używać wtyczek adapterowych lub usuwać kołka obwodu ochronnego z wtyczki. Jeżeli konieczne jest użycie przedłużacza to należy użyć przedłużacza 3-żyłowego z prawidłowo połączonym przewodem ochronnym.
- System komputerowy należy zabezpieczyć przed nagłymi, chwilowymi wzrostami lub spadkami napięcia, używając eliminatora przepięć, urządzenia dopasowującego lub bezzakłóceniowego źródła zasilania.
- Należy upewnić się, aby nic nie leżało na kablach systemu komputerowego, oraz aby kable nie były umieszczone w miejscu, gdzie można byłoby na nie nadeptywać lub potykać się o nie.
- Nie należy rozlewać napojów ani innych płynów na system komputerowy.
- Nie należy wpychać żadnych przedmiotów do otworów systemu komputerowego, gdyż może to spowodować pożar lub porażenie prądem, poprzez zwarcie elementów wewnętrznych.
- System komputerowy powinien znajdować się z dala od grzejników i źródeł ciepła. Ponadto, nie należy blokować otworów wentylacyjnych. Należy unikać kładzenia luźnych papierów pod komputer oraz umieszczania komputera w ciasnym miejscu bez możliwości cyrkulacji powietrza wokół niego.

RETURN TO TOP OF THE PAGE

North Europe (Nordic Countries) Information

Placering/Ventilation

VARNING:

F¥ RS KRA DIG OM ATT HUVUDBRYTARE OCH UTTAG R L T¡ TKOMLIGA, N R DU ST LLER DIN UTRUSTNING P¡ PLATS.

Placering/Ventilation

ADVARSEL:

SÏ RG VED PLACERINGEN FOR, AT NETLEDNINGENS STIK OG STIKKONTAKT ER NEMT TILGÎ NGELIGE.

Paikka/Ilmankierto

VAROITUS:

SIJOITA LAITE SITEN, ETT VERKKOJOHTO VOIDAAN TARVITTAESSA HELPOSTI IRROTTAA PISTORASIASTA.

Plassering/Ventilasjon

ADVARSEL:

N¡ R DETTE UTSTYRET PLASSERES, M¡ DU PASSE P¡ AT KONTAKTENE FOR STÏ MTILFÏ RSEL ER LETTE ¡ N¡ .

RETURN TO TOP OF THE PAGE

BSMI Notice (Taiwan Only)

符合乙類資訊產品之標準

RETURN TO TOP OF THE PAGE

Ergonomie Hinweis (nur Deutschland)

Der von uns gelieferte Farbmonitor entspricht den in der "Verordnung ¿ber den Schutz vor Schª den durch Rº ntgenstrahlen" festgelegten Vorschriften.

Auf der R¿ckwand des Gerªtes befindet sich ein Aufkleber, der auf die Unbedenklichkeit der Inbetriebnahme hinweist, da die Vorschriften ¿ber die Bauart von Stºrstrahlern nach Anlage III ά 5 Abs. 4 der Rºntgenverordnung erf¿llt sind.

Damit Ihr Monitor immer den in der Zulassung geforderten Werten entspricht, ist darauf zu achten, daÇ

1. Reparaturen nur durch Fachpersonal durchgef¿hrt werden.
2. nur original-Ersatzteile verwendet werden.
3. bei Ersatz der Bildrºhre nur eine bauartgleiche eingebaut wird.

Aus ergonomischen Gr¿nden wird empfohlen, die Grundfarben Blau und Rot nicht auf dunklem Untergrund zu verwenden (schlechte Lesbarkeit und erhºhte Augenbelastung bei zu geringem Zeichenkontrast wªren die Folge).

Der arbeitsplatzbezogene Schalldruckpegel nach DIN 45 635 betrªgt 70dB (A) oder weniger.

ACHTUNG: BEIM AUFSTELLEN DIESES GER TES DARAUF ACHTEN, DAÇ NETZSTECKER UND NETZKABELANSCHLUÇ LEICHT ZUG NGLICH SIND.

RETURN TO TOP OF THE PAGE

End-of-Life Disposal

Your new monitor contains materials that can be recycled and reused. Specialized companies can recycle your product to increase the amount of reusable materials and to minimize the amount to be disposed of.

Please find out about the local regulations on how to dispose of your old monitor from your local Philips dealer.

(For customers in Canada and U.S.A.)
This product may contain lead and/or mercury. Dispose of in accordance to local-state and federal regulations.
For additional information on recycling contact www.eia.org (Consumer Education Initiative)

RETURN TO TOP OF THE PAGE

Information for UK only

WARNING - THIS APPLIANCE MUST BE GROUNDING.

Important:

This apparatus is supplied with an approved moulded 13A plug. To change a fuse in this type of plug proceed as follows:

1. Remove fuse cover and fuse.

2. Fit new fuse which should be a BS 1362 5A,A.

S.T.A. or BSI approved type.

3. Refit the fuse cover.

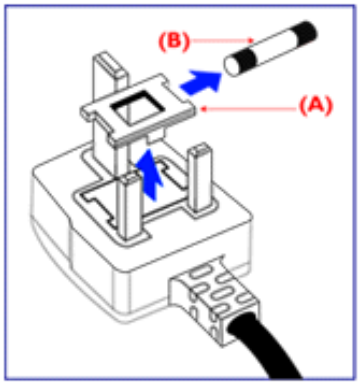

If the fitted plug is not suitable for your socket outlets, it should be cut off and an appropriate 3-pin plug fitted in its place.

If the mains plug contains a fuse, this should have a value of 5A. If a plug without a fuse is used, the fuse at the distribution board should not be greater than 5A.

Note: The severed plug must be destroyed to avoid a possible shock hazard should it be inserted into a 13A socket elsewhere.

How to connect a plug

The wires in the mains lead are coloured in accordance with the following code:

BLUE - "NEUTRAL" ("N")

BROWN - "LIVE" ("L")

GREEN & YELLOW - "GROUND" ("G")

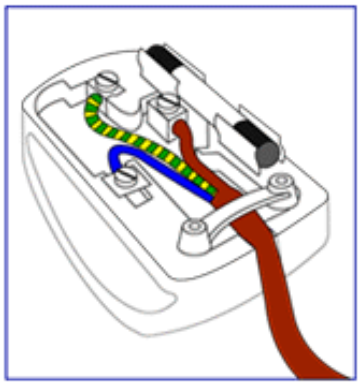

1. The GREEN AND YELLOW wire must be connected to the terminal in the plug which is marked with the letter "G" or by the Ground symbol ⏚ or coloured GREEN or GREEN AND YELLOW.

2. The BLUE wire must be connected to the terminal which is marked with the letter "N" or coloured BLACK.

3. The BROWN wire must be connected to the terminal which marked with the letter "L" or coloured RED.

Before replacing the plug cover, make certain that the cord grip is clamped over the sheath of the lead - not simply over the three wires.

RETURN TO TOP OF THE PAGE

China RoHS

The People's Republic of China released a regulation called "Management Methods for Controlling Pollution by Electronic Information Products" or commonly referred to as China RoHS. All products

including CRT and LCD monitor which are produced and sold for China market have to meet China RoHS request.

中国大陆RoHS

根据中国大陆《电子信息产品污染控制管理办法》（也称为中国大陆RoHS），
以下部分列出了本产品中可能包含的有毒有害物质或元素的名称和含量

本表适用之产品

显示器（液晶及CRT）

有毒有害物质或元素

部件名称	有毒有害物质或元素					
	铅（Pb）	汞（Hg）	镉（Cd）	六价铬（Cr6+）	多溴联苯（PBB）	多溴二苯醚（PBDE）
外壳	○	○	○	○	○	○
CRT显示屏	×	○	○	○	○	○
液晶显示屏/灯管	×	×	○	○	○	○
电路板组件*	×	○	○	○	○	○
电源适配器	×	○	○	○	○	○
电源线/连接线	×	○	○	○	○	○

*： 电路板组件包括印刷电路板及其构成的零部件，如电阻、电容、集成电路、连接器等
○：表示该有毒有害物质在该部件所有均质材料中的含量均在
《电子信息产品中有毒有害物质的限量要求标准》规定的限量要求以下
×：表示该有毒有害物质至少在该部件的某一均质材料中的含量超出
《电子信息产品中有毒有害物质的限量要求标准》规定的限量要求；但是上表中打“×”的部件，
符合欧盟RoHS法规要求（属于豁免的部分）

RETURN TO TOP OF THE PAGE

dqvx,˘ ˜ ˜,˘:]˘ ˜˘ ˜ ˜ ˜

ş teOlsÇO^v
cfdW tstacf3Ouqf^w
ts
tdzÇtsotsH frJsoj
u frpbtsodz j
tsB tsLdÆujdzf^w

R dW tstacf3Ouqf^w ts H Odzbtsdz[bÇtsotsH frJsoj

ş teOlsÇO^v cfdW tstacf3Ouqf^w ts tdzÇtsotsH frJsoj

r Odzbtsj ‹ dzj Çlstcsdzbtsj tdzÇtsotsH frJsots tJ tcj H dÆLdÆujdts H dz^ tJ tsdz L tsoOlsj dz^ dj3sdzf\lststcO Philips fnj
>cfH Çts Çtcf frJsOdzbz[ujfrJ Çcfdz3 H cfrJ[dzj j dz3 (r ş r). J tdzÇtsotsH frJsoj tstJ cfrJOdz W lzdÆuqf tsdzÆdz dz j
otsLdj3s>dtsfrJsc[dj3sdzf\lststcO fnj r ş r cf tJ tcfoj H j dz cfdzbjstdzÇuqfcf tJ ts j dts dzÆfrJstcts?Çj cf ‹ Çfrj[dzOlsOuqfcf, O
lsO Ç>j H tdzcf[j tJ tsdzj L dz j frpj H j dzf^w. U j Çfrj s H Odzbtsdts ‹ dzj Çlstcsdzbtsdts tdzÇtsotsH frJsoO tJ tsdzbtsfrJs ^
frJsotJ O H O j lsfnlsj Çfrjstsdz3 B tdts h ^ tdr .

[bÇtsotsH frJsots frJsH j tc>cflsfrpbj H lz^ h cf j tcOL H j dz :

- H oj H j dzf^w tJ ts lsj Ñdzf Çj B j L tstJ Ofrpbtsfrjscf, tJ tscfrj Çlz cf bzfrJstcOdzj dzf^ dzj cfrj[tcOodtsfrJsj?. J ‹ lstsdz3 tcOL H j dzj tJ tcfoj H j dz tcj Çtsdzj dzH Ouqfcf cf bÇOL Odzf^w tJ ts tcj h j dzf^ tsB h cfÑ tJ tdtsB dzj dz3 OlsOÇ>j dzj tsB Ñtsh cfdz3 j frpj H j dzf^w, Çtslstsdr j dz3sdzlsstJ lstcj B tsOls frJ^w tJ tsdz L tsOlsj dz^ .
- ş teOlsÇO^v cfdW tstacf3Ouqf^w tsB ‹ dzj Çlstcsdzbtsdz3 tdzÇtsotsH frJsoj H dz^ tJ tsdz L tsOlsj dz^. J ‹ lstsdz3 tcOL H j dzj tJ tcfoj H j dz tsB L tstc frpj H j dzf^?, frJsH j tc>cfO h cfÑ frJ^ o H Odzbtsdz3 tdzÇtsotsH frJsoj, OlsOÇ>j tstJ cfrJOdzf j tJ cfÇlstsdtcOdz3dz3 cf H tdzdts? H ts Çlzdz3j dtsOuqfcf H dz^ frJ[tcOoÇcf.
- H oj H j dzf^w tsB cfL H j dzdz[cf. J ‹ lstsdz3 tcOL H j dzj tJ tcfoj H j dz tsB L tstc W lzdÆuqf tsdzÆdz dz Ñ otsLdj3s>dtsfrJsj? cf lsj Ñdzf ujfrJ Çcfj Ñ Otc OÇlsj tcfrJsc[Çcf dj3sdzf\lststcO.
- U frJsOdtsoÇO dj3sdzf\lststcO. J ‹ lstsdz3 tcOL H j dzj tstJ cfrJOdzf[tdtsujfrJ tJ j tcotsdzÆuqOdz dtsB? dzÆfrJstcts?Çcf dj3sdzf\lststcO cf tJ tcfoj H j dz tsB h cfj frpj H j dzf^w tJ ts ‹ Çfrj[dzOlsOuqfcf dj3sdzf\lststcO.
- Ç Çtc Odzbtz j dz3j dz . J ‹ lstsdz3 tcOL H j dzj tJ tcfoj H j dz frpj H j dzf^w tJ ts tcj dzzdz[tdtsoÇj tJ Otc Odz3j lstdtso dj3sdzf\lststcO.
- H oj H j dzf^w tJ ts tJ tsfrpbj tJ tdtsH O>cfdtsdz3z tsB frpbtz>cfoOdzf^ cf oOtc Odtsdf?dz j tsB wL Olsj dz frJsoO. J ‹ lstsdz3 tcOL H j dzj tJ tcfoj H j dzf[j tcj ujfdz cfdW tstacf3Ouqf tsdzbtz Ñ ujfdtsdtsoH dz^ tJ tsdz L tsoOlsj dzj? OtJ tJ Otc Olsdztc Philips, tcOL dz3j h j dzbtz Ñ o tcOL dz Ñ tcj ocf tsdzÆÑ dz3[tcO, OlsOÇ>j dtsdz3j tcOlsj dzj W tsdtso frJ[tcOotsupdz Ñ frpbtz>cfB cf frpj H j dzf^w ts oOtc Odtsdf[cf dzÆdz3sdzf\lststc.
- j dtsfrJ[Otcf?. J otdtsfrJ[Otcf[cf tstJ tcj H j dzj dz lsj Ñdzf ujfrJ Çcfj lsj tcdz3[cfdz .
-] Odtdz L ÇOcf tJ j uÇlsr (tJ ts tsl H j dz dtsdz L OÇOLlz). Ç lsO W lzdÆuqf^w tJ ts L otsdz^j lstJ j tcj H Olsr o fnj
‹ dzj Çlstcsdzbtsj tdzÇtsotsH frJsots dÆ>cfj frJsÇcf? H cfrJÇ H dz^ lzH tsB frJsO tsB tcOh j dzf^w L O frJ[tcOotsupdts?
cfdW tstacf3Ouqfj?.

U frpbtsodz j tsB tsLdÆujdzf^w

J frpbj H lz^ h cfÑ tJ tsH tcOL H j dzÆÑ tJ tcfoj H j dts tstJ cfrJOdzf[j lzfrpbtsodz Ñ tsB tsLdÆujdzf?, cfrJ[tstdz L tsOdztz Ñ o
H Odzbtsdz3 H ts Çlzdz3j dtsj.

] tcf[dz3j uÇOdzf^w, tJ tcj H lzf[tcj ‹ H j dzf^w cf tJ tcj H ts frJsj tcj ‹ j dzf^w

J H Odzbtsdz3 tdzÇtsotsH frJsoj tslsH j dz dz j W tcOdz3j dts lsj Çfrj sO dj3sdzlsB r lsr o r H j dzj dz tJ tsfrJtcj H frJsotsdz3
tJ cfÇlstsdtcOdz3dz3 cf cfrJ[tstdz L tsOdzf^w ‹ cftcdtsdts cf dzf Çlztcfrj[o dtsdts h tcf W lsO Ç lsf W tcOdz3j dts

fnj˜ˆ˜ˆ˜ˆ

j·¹¹ ¹ ¹

Lead Free!

Philips

RoHS

Philips

?

	20,1
	0,258 x 0,258
	1680 x 1050 -
	433,44 x 270,9
	8- (16,7)
	56 - 76 (/)
	30 - 98 ( )

Y Ofrjstslso dzj dz ?Odzfw lstsuj ?	210 Mlu
l tsdzdzsj frjstjtatslsqjo dzj dzfj tjts o-tsHlz	
-J qHj tsfmjqdzdzO	75 Ω
-H qdZtatsfmjqdzdzO	2,2K Ω
U tatso dzj o-tsH dzsats fmjqdzdzO	0,7 J (Ho ts? dzw Odzjdzqlszh O)
J -tsH dzs? fmjqdZtatsfmjqdzdz	j lsHj dz dz ? fmjqdZtatsfmjqdzdz ? tsdzjtsL qlujqtsdzdz ? fmjqdZtatsfmjqdzdz H qdZtatsdzjL Oujqw - tjts fmjqdzdz Lj dzj dzsats
l tsdzw tadzsfrjsq fmjqdZtatsfmjqdzdzO	l tsdzs> qlsj dz dzw qtslstaqlujOlsj dz dzw
j l UR Y j H ?R j MOj OS Uj l RHURSR	
j OfmjqdzOdz dzw ?tsdzstaOfrjsdzsfrjs	frjstslso j lsfrjso lzj ls tjtsdzs> j dzj " dz 6 uOfrjso"
V o j lsdzsfrjs tsjtstadzsats B j dzsats	x: 0,283 y: 0,297 (9300ÁK) x: 0,313 y: 0,329 (6500ÁK)

** ? ls qfmpj Hj dzfw dzsgtzls Br ls J qLdzj dzj dz Bj L tjtaj Ho Otaqls j dz dzsgts lzoj Htsdzdzj dzfw.*

E y R l O l U H l O Y O j U S l O l j r L j r

---

l O L taj h O x h O w fmjtsfrjso dzsfrjs qtjtaj Ho Otaqlsj dz dzs dzfrjstatsj dzdz j taj x qdzj

j OfmjqdzdzJ	1680 x 1050 tjtaq 75 lu (Odzdzsatso r ? o-tsH) 1680 x 1050 tjtaq 60 lu (ujqw tatso ts? o-tsH)

؟ ؟ ؟

ϕɔlstsɔʒʊlsɔʃʊɟfɾʃɔʃ? tɔɟiɤlɔʃɔʒ¹ ɔʒɟtɔɔtstsʃnɞɟtɔɟiɤɟɔʒɟʷ

[fnɔʒʃ ɔʒʔɔʊʰ ɟɔʒ¹ ʂ lzʃɾʃsʊɔʒɟɔʒʔtʃɔʒʔlsʊɔɔʃɔʒʃʊɟfɾʃɔʃ? tɔɟiɤlɔʃɔʒ¹ ɔʒɟtɔɔtstsʃnɞɟtɔɟiɤɟɔʒɟ, tslsɔɟʊʃʊʰ ɔʃɟ lstɔɟʁtsɔʊɔʒɟʷɔʒ DPMS (ʁtʃɟʊʃʷ ɔʃʃʊʃʷɔʒfnʃɔʒʔɔʒʔʃʊʃɔʃ lzʃtɔʊɔʒɟɔʒɟʷ¹ ɔʒɟtɔɔtstsʃtslstɔɟʁɔʒɟɔʒɟʃɔʒHɔʃfnʃɔʒɟʷ) VESA (ϕfnʃɾtsʊʃʊʃɔʃ tʃtsfnʃsʊɔʒʔtɔɔtsʊʃɔʒʊ tsʁɔʒʔfnʃsʃ ɔʃHɟtsɟ ɔʒɟʃtstɔɔʒʔ), ɔʒtsɔʒʔlststɔʊlstsɔʒʊlsʃʊɟfɾʃɔʃ fnɔʒʔʃʊʃ¹ ɔʒɟtɔɔtstsʃtslstɔɟʁɔʒɟɔʒɟʃ, ʃtsɔHʊtsɔʒʔzʁlzHɟlsʃ tʃɟtɔɟiɟHɟɔʒʔ ɔʒɟtɔʊʁtsʊʃʃ? tɔɟiɤlɔʃɔʒ¹ tɔʃ tsʁɔʒʔtɔzɤɟɔʒʔʃ ɔ¬tsHɔʒʔtsʃnʃɔʒʔɔʒʔtsls ʃɔʒʔɔʃʊlsʒtɔ , ɔʒʔʰ ɔʃ ɔʃɔʒʃ Htɔzɔtstsʃtsʃzfnʃstɔʃ? fnʃsʊʊɔʊtsHʊɔʒʔtsɔʒʔʃlststɔʊlstsɔʒʊlsʃʊɟfɾʃɔʃ tʃɟtɔɟiɔtsHɔʃlsfnʷ ɔ ʊʃlsʃɔʊʔ? tɔɟiɤlɔʃɔʒ¹ tslstɔɟʁɔʒʔɟɔʒʊʷ ɔʒʔsʰ ɔʒʔsfnʃs ɔʃ fnʃɔʒʔtɔɔtsʃtsʃzfnʃstɔʃ? fnʃsʊʊɔʊʃɔʃ Hɔʒʔʷtɔɟiɤlɔʃɔʒʔʊʊlsʃʊɟfɾʃɔʃ tʃtsfnʃsʊɔʒʔtɔɔtsʃnɞɟtɔɟiɤɟɔʒɟʷ tʃtɔɟiHfnʃsʊɔʒʔɔʒʔ ɔ fnʃɔʒʔHlzʰ ɟʔ lsʊʁɔʒʔʃʊɟ:

tɟiɤlɔʃɔʒ lzʃtɔʊɔʒɟɔʒʔʷ tʃtsfnʃstɔɟʁɔʒɟɔʒʔʃ ɔʒɟtɔɔtsʃ					
tɟiɤlɔʃɔʒ VESA	ʃlHɟtsfnʃsʊɔʒʔ	ʁlɔʃʔtɔɔtsfnʃsʊɔʒʔ fnʃstɔtsʊʃʃ? tɔʊɟɔɟtɔɟʃɔʃ	ʁlɔʃʔtɔɔtsfnʃsʊɔʒʔ ʃʊʃʊʃ? tɔʊʊɟɔɟtɔɟʃɔʃ	tslstɔɟʁɔʒʔɟɔʒʊʷ ɔʒʔsʰ ɔʒʔsfnʃs	ʊɔʊstsʃʊʃʃɔʃ ɔʃɔʒʔʃʊʃʃɔʃ fnʃɔɟlstsHɔʃtsHɔʒʔtsʃ ɔʃɔʒʔʃʊʃʃɔʃ
ϕʃʊlsʃɔʃɔʒ	ʃsʃ	ʊ l	ʊ l	48 l ls (lsɔʃtʃɔʃʊʃɔʒʔ)	ʃ ɔʒʔɔʒʔɟ l
ʃɔʒʔɔʃʊlsʃ ʃʊʃ ʃ ʃɔʒʔ ʃʊʃ ʃ ʃɔʒʔ ʃʊʃ ʃ ʃɔʒʔ

[illegible]	130 [illegible]
[illegible]	100 240 [illegible] 60 - 50 [illegible]
[illegible]	48 [illegible]
[illegible]	5ÁC [illegible] 35ÁC ([illegible]) -20 ÁC [illegible] 60ÁC ([illegible])
[illegible]	20% - 80%
[illegible]	50K [illegible] (L[illegible] CCFL 40K [illegible])
[illegible]	[illegible]
[illegible]	
- [illegible] [illegible] - [illegible]	0 - 40 000 [illegible] (12 192 [illegible]) 0 - 12 000 [illegible] (3 657,6 [illegible])

** [illegible] 1680 x 1050, [illegible] 50%, [illegible] 6500ÁK, [illegible].*

[illegible]

[illegible]

[illegible] DVI [illegible] 24 [illegible] 8 [illegible]. [illegible]:

-			-			-	
1	T.M.D.S.	2 -	9	T.M.D.S.	1-	17	T.M.D.S. 0-
2	T.M.D.S.	2 +	10	T.M.D.S.	1+	18	T.M.D.S. 0+
3	T.M.D.S. 2		11	T.M.D.S. 1		19	T.M.D.S. 0
4			12			20	
5			13			21	
6	DDC		14	+5V		22	T.M.D.S.
7	DDC		15	(H/V-		23	T.M.D.S. +
8	* V-		16			24	T.M.D.S. -

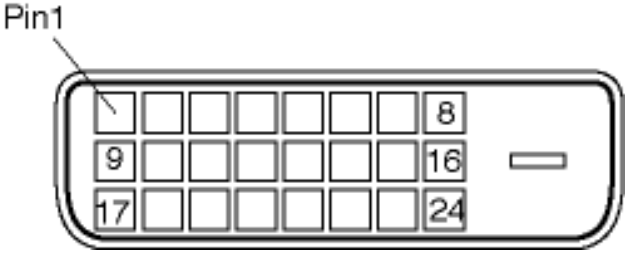

15-D-sub

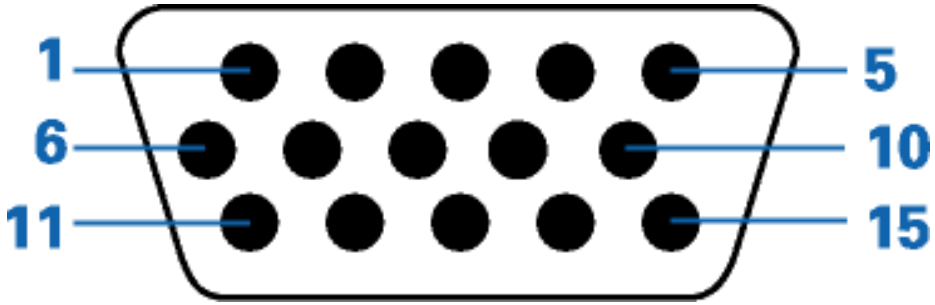

؟ ؟ ؟	؟ ؟ ؟		؟ ؟ ؟	؟ ؟ ؟
1	؟ ؟ ؟ ؟ ؟ ؟ ؟ ؟		9	+5V
2	؟ ؟ ؟ ؟ ؟ ؟ ؟ ؟

j·¹¹·»¹ ¹ ¹

1) [illegible]

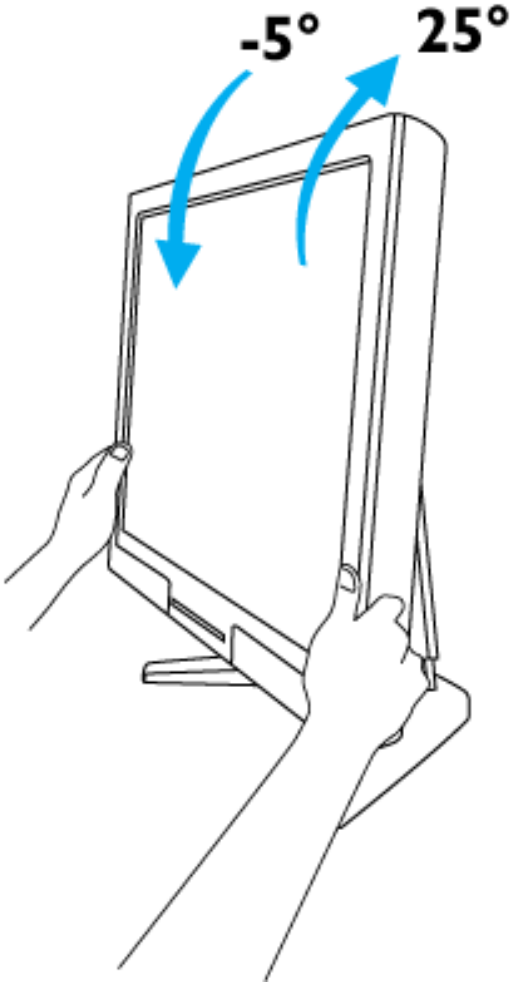

2) tj tso tstdsls⊙

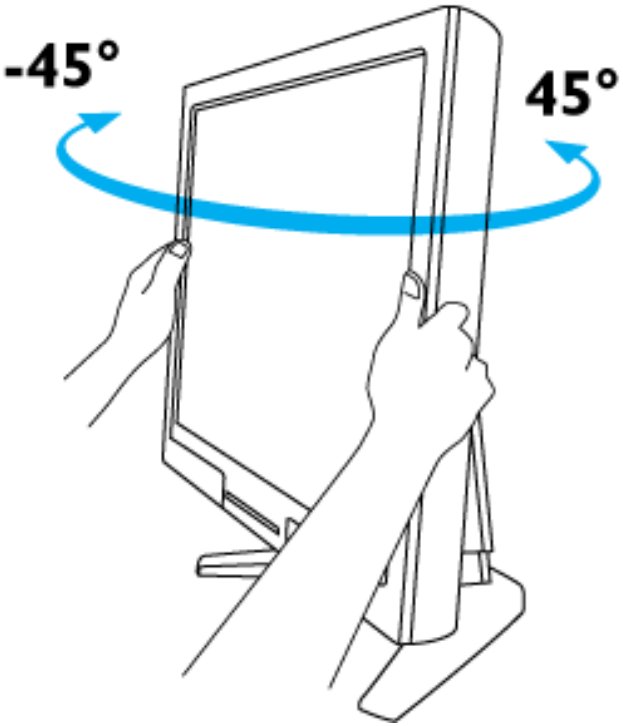

3) t j dzdzjtdsso ⊙ ⊙ ⊙ ⊙ frjsls

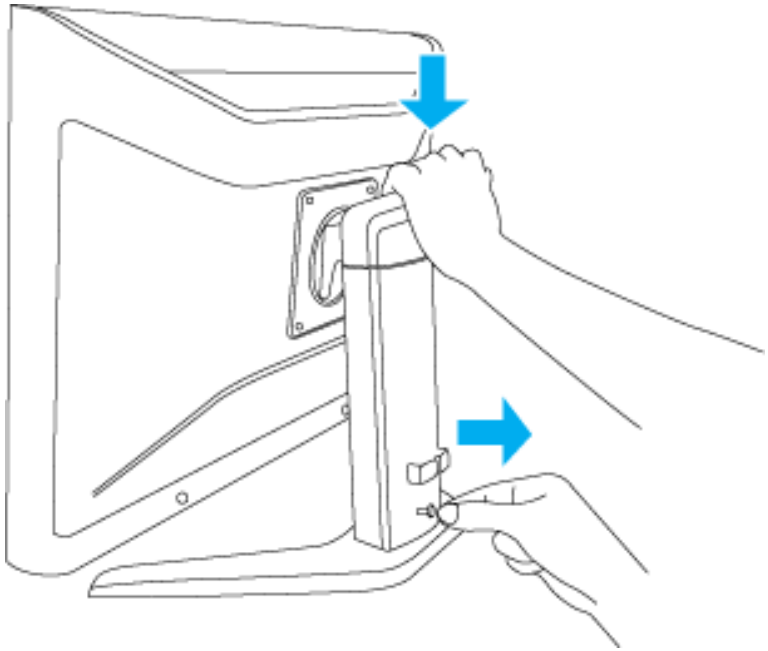

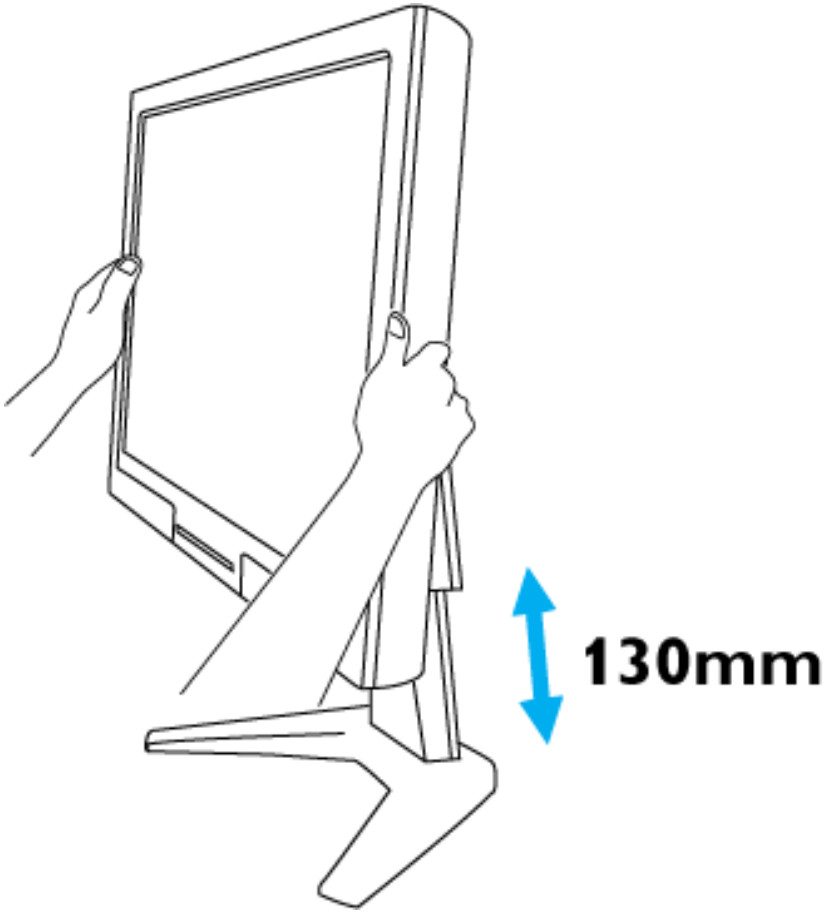
130mm

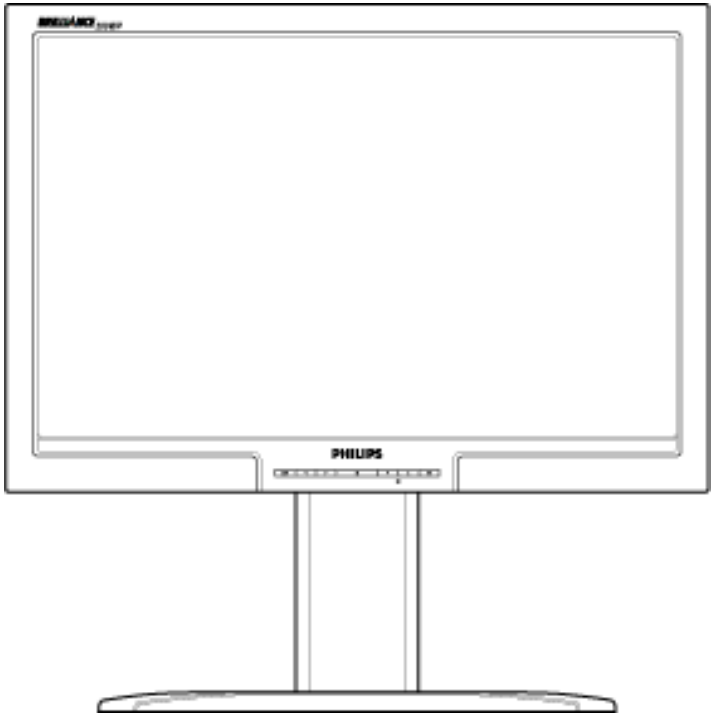

4) 1 tstdstcjlsdtzsj
tjtsdtzs|jdzfj 1 Stcdz

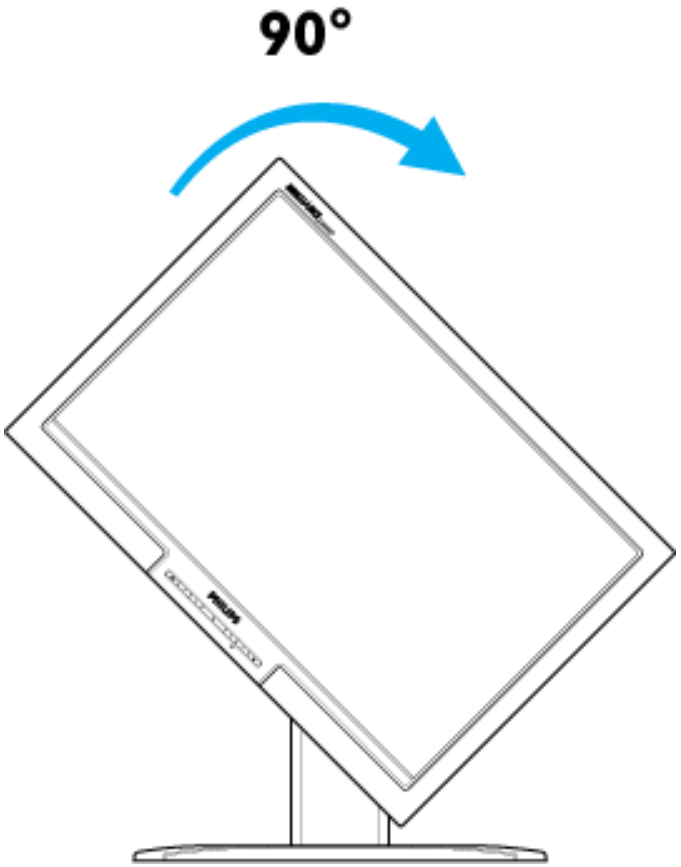
90°

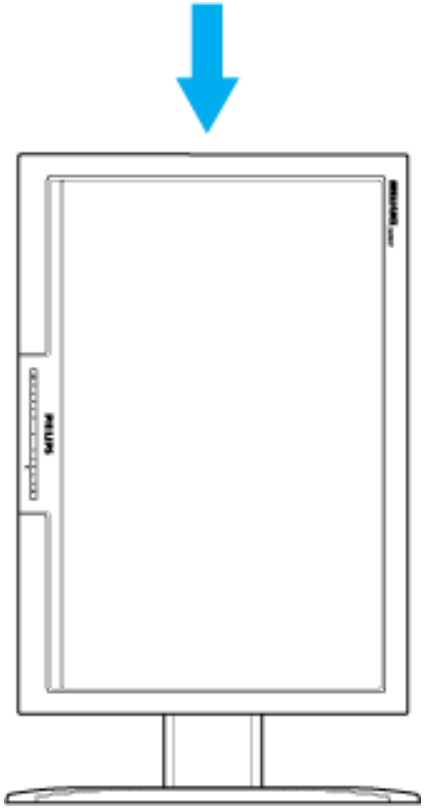

5) FlexiHolder

Εγκατάσταση μονάδας βάσης

h ˅ ˅ ˅

h ˚ ˚ ˚

h ˇ ˚ ˚ ˚

1 tsɔ tstɑtslsɔ
dʒsɔdʒ[lstsɔtɑ⊙
1 tsɔ tstɑtslsɔ
d[L tsB tɑ⊙>| ¸ dʒ[W
tsf¸ tɑ⊙ u d[tsɔdʒ[ts?
frp[fr]s¸ dʒ
ʔtsɔdʒf J B lsj tɑ⊙

1 tsɔ tstɑtslsɔ dʒsɔdʒ[lstsɔtɑ⊙

1 tsɔ tstɑtslsɔ dʒsɔdʒ[lstsɔtɑ⊙

1 ¸ tɑj H lsj dʒ ʔ⊙ʔ tf tsɔ tstɑ⊙ u d[ɔ⊙ls dʒsɔdʒ[lstsɔtɑ, tɑ⊙L B dʒsʔ d[tdz? lsj W W d[ʔfr⊙lstsɔtɑ ɔ L⊙H dʒ¸ ? u⊙fr]s d[tsfrpʒtsɔ⊙dʒ[W d[tf tsH dʒ[dʒ d[lsj dʒsɔdʒ[lstsɔtɑ dʒ⊙ tf tsH fr]s⊙ɔʔ¸ , u[stsB r dʒ¸ lzH⊙tɑd[ls dʒ[> dʒ[? ʔtɑ⊙? dʒsɔdʒ[lstsɔtɑ⊙ ɔ ts ɔ tɑj dʒW tf tsɔ tstɑtslsɔ⊙.

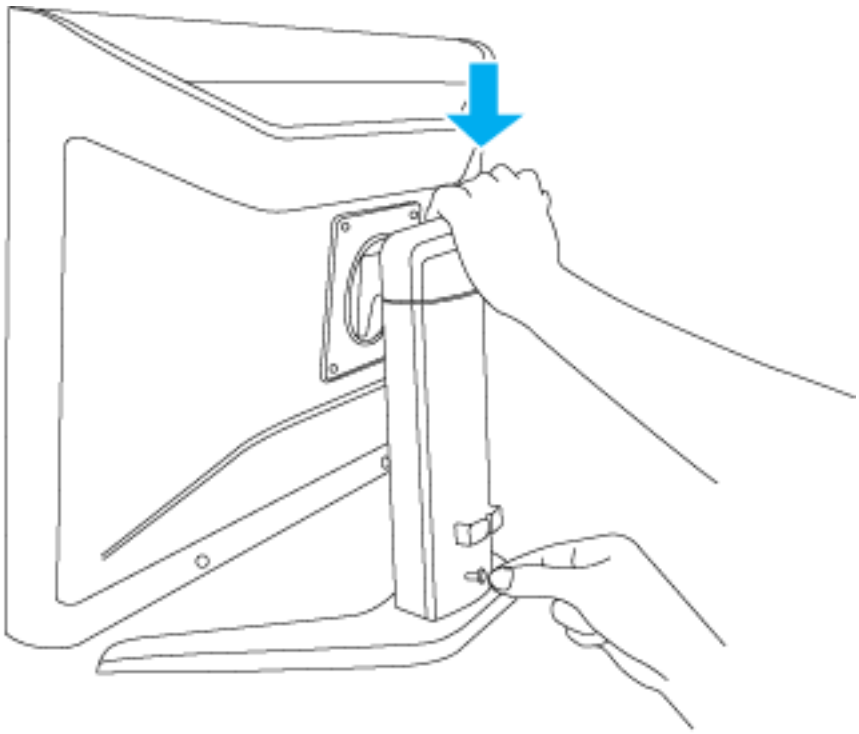

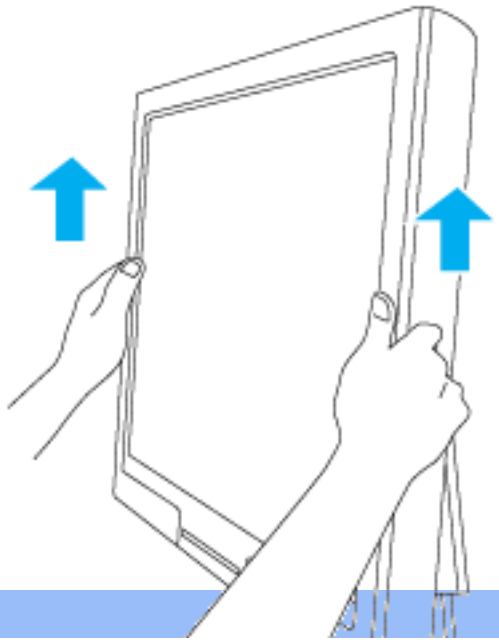

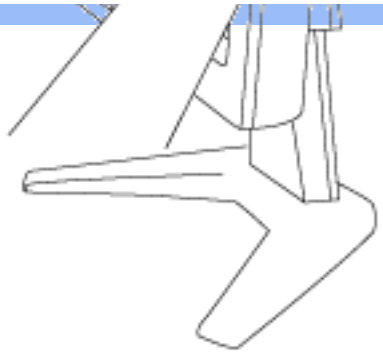

90°

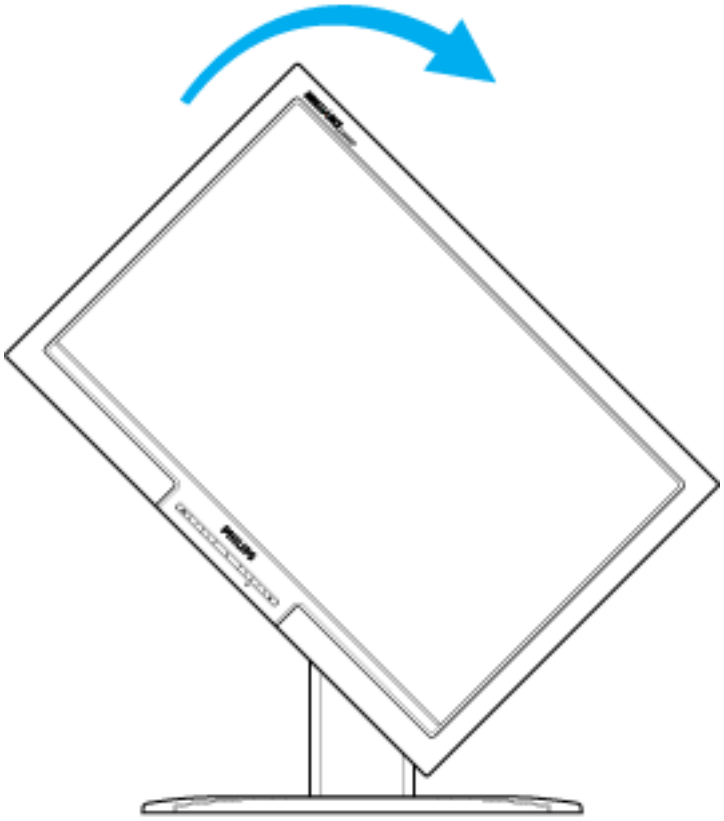

h ̣ ̣ ̣

ᵸ ɵ ɟ ᵸ ɟ dz ɟ ᵂ tsʁ
ɖ ʟ ᵸ ɟ dz ɟ ɖ
ʅ tsdz ɟ ls ɟ ɖ ⊙
ɖ tsdz ɟ ʃ ⊙ dz ɟ ɖ
Philips ɵ
tslsdz ʰ ɟ dz ɟ ɖ
ᵸ ɟ ᵂ ɟ ɖ tsɵ
tʃ ɟ ɖ fnɟ dz ɟ ?
ʅ ɵ ɟ ᵸ ɟ dz ɟ
ʌ lzdz ɟ ɖ ɟ ɖ ɟ
tʃ tɖ ɟ ɖ dz ʰ ɟ frɟ sɵ ⊙
SmartManage
Philips
SmartControl
ʅ tsʃ tɖ sfnɟ ɖ
tslsɵ ɟ ls

SmartManage

ʅ ɵ ɟ ᵸ ɟ dz ɟ

Philips SmartManage ï ʅ lsts tʃ ɟ tɖ ɟ ᵸ tsɵ tsɟ tɖ ɟ ʰ ɟ dz ɟ ᵸ dz ᵂ tʃ tsdz ʟ tsɵ ⊙ ls ɟ dz ɟ ?, ɵ ɟ ɖ frɟ sdz frɟ sɖ ɟ
⊙ ᵸ dz ɟ dz ɟ frɟ stɖ ⊙ lsts tɖ sɵ tʃ ts ʀ ʊ ɟ ts tɖ ʃ ts tɖ ⊙ ɟ dz ɟ ? ɖ ʃ zɟ tɖ ɟ ʳ ɟ ᵸ ɟ ᵂ ʳ ʰ ɟ ɟ ts frɟ zʰ ɟ frɟ sɵ dz ᵂ ls lzʃ tɖ ⊙ ɵ dz ɟ dz ɟ
dz ɟ sdz ɟ lsts tɖ ⊙ dz ɟ ɖ Philips ɵ tɖ ⊙ dz ɟ ⊙ ʃ frɟ tɖ ɟ ᵸ lzʃ tɖ ⊙ ɵ dz ɟ dz ɟ ᵂ tɖ ɟ frɟ zɖ frɟ ⊙ dz ɟ ɖ. ʅ frɟ sfrɟ sɵ ʅ lsts ts tɖ ɟ ᵸ ɟ dz ɟ ᵂ ɵ ʃ ts ᵸ ʃ ls
lstɖ ɖ ts frɟ ɖ sɵ dz ʃ ts ɟ ts ʃ ts dz ɟ dz ɟ sɖ ⊙ Philips SmartManage Administrator (ϕ ᵸ dz ɟ ɖ dz ɟ frɟ stɖ ⊙ lsts tɖ
ɖ dz ɟ dz ɟ dz ɟ ts lz ⊙ dz dz ɟ sɖ ts lzʃ tɖ ⊙ ɵ dz ɟ dz ɟ ᵂ Philips), Philips SmarControl (ʀ dz ɟ dz ɟ dz ɟ ts lz ⊙ dz dz ᵂ tʃ ⊙ dz ɟ dz
lzʃ tɖ ⊙ ɵ dz ɟ dz ɟ ᵂ Philips) ɖ Agent (ϕ ɖ ɟ dz ɟ).

Philips SmartManage ʷɵ dz ᵂ ɟ ls frɟ ʷ frɟ sɵ dz ɟ frɟ sdz ɟ ? tɖ ⊙ ʟ tɖ ⊙ ʁ ts ls ts ? ts dz ɟ ʃ ⊙ dz ɟ ? Philips ɖ Altiris Inc.

ʌ lzdz ɟ ɖ ɟ ɖ tʃ tɖ ɟ ɖ dz ʰ ɟ frɟ sɵ ⊙ SmartManage

Philips SmartManage tʃ tɖ ɟ ᵸ frɟ s⊙ ɵ dz ᵂ ɟ ls frɟ sʁ ts ? tɖ ⊙ ʁ ts ʊ ɟ ʳ ts dz ɟ dz ɟ ᵸ dz ᵂ dz ɟ dz ɟ ᵸ ɟ ts dz ɟ tʃ tɖ ⊙ ʁ ts ʊ ɟ ,
tʃ ts ʟ ɵ ts dz ᵂ ʳ ʰ lzʳ frɟ sʁ ɖ ɟ tɖ ⊙ ls ɖ ɟ dz ɟ ts tɖ dz ɟ ⊙ ʊ ɟ ʳ ts dz ɟ dz ɟ ts tɖ ⊙ ʃ , tʃ tɖ ɟ dz ɟ ⊙ ᵸ dz ɟ dz ɟ ts tʃ ⊙ frɟ dz ɟ dz ɟ ᵂ ,
ts dz ɟ ts tɖ dz ɟ dz ɟ ts tɖ ⊙ ls ɖ ɟ dz ɟ ʃ ⊙ ʁ ʅ ʟ ts tʃ ⊙ frɟ dz ɟ dz ɟ ʁ ,
ɖ ts ls tʃ tɖ ⊙ ɵ dz ᵂ ls dz ɟ sdz ɟ dz ɟ dz ɟ ⊙ dz dz ɟ dz ɟ frɟ sts sʰ ɟ dz ɟ ᵂ tʃ tsdz ʟ tsɵ ⊙ ls ɟ dz ᵂ dz ɟ dz ɟ sdz ɟ lsts tɖ sɵ.
Philips SmartManage ɖ dz ɟ ɟ ls frɟ dz ɟ ᵸ ʳ ʰ ɖ ɟ ʅ ts frɟ dz ɟ dz ɟ ᵂ lzdz ɟ ɖ ɟ ɖ:

/, ʃ ʁ ɟ frɟ ʃ ɟ ʊ ɟ dz ɟ ɟ ᵸ ts tʃ ts dz dz ɟ dz ɟ dz ɟ ʃ ʁ ɟ ʟ ts tʃ ⊙ frɟ dz ɟ dz ɟ ɖ frɟ sɖ ᵸ dz ᵂ ts tɖ tʃ ts tɖ ⊙ ls ɖ ɟ dz ɟ ? frɟ
ʊ ɟ dz ʳ ʟ ⊙ ʰ ɖ ls ʳ ɖ dz ɟ frɟ sɖ ʊ ɟ ?.
0, ʌ lzdz ɟ ɖ ʊ ɟ ʳ ʅ dz ɟ tɖ dz ɟ frɟ sʃ tɖ ⊙ ʰ ɟ dz ɟ ᵂ ᵸ dz frɟ s⊙ ʰ ɟ dz ɟ ᵂ ts dz ɟ dz ɟ dz dz ɟ dz ɟ ⊙ frɟ ʃ ts ᵸ ts ɖ ɖ ɟ ts ɖ ɟ ts
tɖ ⊙ ʁ ts ʊ ɟ ? frɟ dz ɟ dz ɟ ɵ ʃ dz ɟ ʊ ɟ dz ɟ ɟ ɖ ɟ ɵ ʳ ʃ dz ɟ ʊ ɟ dz ɟ ɟ ɖ ɟ dz ɟ sdz ɟ lsts tɖ sɵ.
1, SmartControl tʃ ts ʟ ɵ ts dz ᵂ ɟ ls tʃ tɖ ts ɖ ʟ ɵ ts ᵸ ɖ ls ʳ ʁ ts dz ɟ ɟ lsts dz ɟ lzʳ dz ɟ frɟ stɖ ts ? ʃ lz tʃ tɖ ts ɖ ʟ ɵ ts ᵸ ɖ ls ɟ dz dz ɟ frɟ sɖ ɖ
tʃ ⊙ tɖ ⊙ dz ɟ lsts tɖ sɵ dz ɟ sdz ɟ lsts tɖ sɵ.
2, ʅ frɟ stɖ ɟ dz ɟ dz ɟ ʷ ᵂ lzdz ɟ ɖ ɟ ʷ frɟ sfrɟ s⊙ ɵ dz ɟ dz ɟ ᵂ tsls ɟ ɟ lsts tɖ sɵ tʃ ts tɖ ɟ frɟ zɖ frɟ ⊙ dz ʃ tʃ ts ʟ ɵ ts dz ᵂ ɟ ls frɟ s⊙ ʃ tɖ ⊙ ls ɖ ɟ ls ʳ tɖ ⊙ frɟ ʃ ts ʰ
tɖ ⊙ ʁ ts ʊ ɟ ? frɟ dz ʳ dz ɟ ⊙ dz ʰ ɖ ls ʳ ls ɟ ʃ dz ɟ ʊ ɟ frɟ ʃ ts ɟ ts ʁ frɟ dz ɟ > ɖ ɵ ⊙ dz ɟ ɟ , tʃ ts ʰ ts dz ɟ ɖ ls ɟ dz dz ɟ frɟ sʁ ʊ ɟ ʃ dz ɟ ⊙ ɖ
ʟ ⊙ ɟ tɖ ⊙ ls ʳ .

ʅ ts ʁ dz ʳ ɵ ɟ tɖ frɟ ʃ ʳ SmartManage dz ɟ s > dz ɟ ʟ ⊙ ɟ tɖ dz ʟ ɖ ls ʳ frɟ
http://www.altiris.com/philips

ʅ ⊙ ʰ ts tʃ ts dz dz ɟ ls ɟ dz dz ɟ ? ɖ dz ᵂ ɟ ts tɖ dz ɟ ⊙ ʊ ɟ ɖ ɟ ? ts Philips SmartManage, tʃ ts > ⊙ dz ? frɟ s⊙ , ts ʁ tɖ ⊙ ʰ ⊙ ? ls ɟ frɟ ʃ
ls ts tɖ ts ɵ ʳ dz ʃ tɖ ɟ ᵸ frɟ s⊙ ɵ ɖ ls ɟ dz ᵂ dz ɟ Philips ɵ ɵ ⊙ ʰ ɟ ? frɟ tɖ ⊙ dz ɟ .

SmartManage ï ʅ lsts tʃ ts tɖ ts tɖ ⊙ dz ɟ dz ɟ ts ʁ ɟ frɟ ʃ ɟ ʊ ɟ dz ɟ ɟ tʃ tɖ ɟ ᵸ dz ʃ ʃ ʊ ɟ dz ɟ dz ɟ ts ɟ ᵸ dz ᵂ
tʃ tɖ ɟ ᵸ tʃ tɖ ɟ ʷ ls ɟ ? . ʀ dz ɟ ɖ ɟ ɖ ᵸ ʟ ⊙ dz dz ɟ dz ɟ dz ɟ tʃ ts dz ʟ ts ɵ ⊙ ls ɟ dz ᵂ dz ɟ ts ʁ ʳ ʊ ɟ dz ɟ ts ɟ dz ɟ ls tɖ ɟ ʁ lz ɟ ls frɟ ᵂ
ɖ frɟ ʃ ts dz ʟ ts ɵ ⊙ ls ʳ SmartManage.

Philips SmartControl

SmartControl ɖ SmartManage Agent tʃtsfrjsʊɔdzʷʁ lsfrʷ ɖ lzfrjsʊdzɴɔdzɖɔʊˣ lsfrʷ dzɴʊʔtsɔdʒʃʳʁ lsjitɔʳ , tsfrjdzɴʰ jɴdzdz j dʒsɔdzɴlsɪstɔʊdʒɖ Philips. ɿ tɔɖ tʃtsɔdʒsʰ ɖ SmartControl ɖ SmartManage Agent dʒsɔdzɴlsɪstɔʳ ɖ ɿ ʂ dʒsɔdzlsɔʟʊɖ dʒsʰj ʔfrjsɔtsɔʊlsʷ frjʟʊʃtɔtsfrjʊɔdʒɖ ʊʰdʒɖ dzɴfrjstɔʊlsɪstɔʊ. ʊʊʔ ʔʊʔ SmartControl tɔʊɔtslsʊjlsɔdzɴ tslsʰj dz dzɴɔdʒɿ ʂ, ʔtsɔdzɴ ʊdz j tʃtsɔdz ʟtsɔʊlsjɔdzɖ lsʊʔ ʔ j dʒsɔdzlsɔɖfrjʃtsɔdz ʟtsɔʊlsʷ SmartControl ʰdzʷ dzɴfrjstɔʳʔʔɖ ʔʊʔ ʊtɔʊʔlsjitɔɖfrjsɖʔ dʒsɔdzɴlsɪstɔʊ.

1. ʊtɔjʁtsɔʊdzɴɖʷ

- ɿ ɖʰj tsʔʊtɔlsʳ frjɖzʁtsɔʊdʒɖ dʒɖʔtɔtsfrjʔj dʒnVIDIA (TNT2, GeForce, Quadro ɖdzɖʁtsɔdzj dzɴɔʳ dʒɖ) ɖ ATI (Radeon ɖdzɖʁtsɔdzj dzɴɔʳ dʒɖ), tʃtsʰʰj tɔʊ ɖʊˣʰ ɖj ɖdzɴjitɔʷ j ʔfrjDDC/CI
- ʃ tʃj tɔʊʊɖtsɔdzdz j frjɖfrjsj dʒʳ Microsoft Windows 2000 ɖ XP.
- ʃˣʁʳ j dʒsɔdzɴlsɪstɔʳ Philips, tʃtsʰʰj tɔʊ ɖʊˣʰ ɖj ɖdzɴjitɔʷ j ʔfrjDDC/CI

2. ʊfrjsʊdzɴɔʔʊ

ʂʊʔ ʟʊtɔdzɴɖlsʷ ʷʷ ʊʔdzɴfrjsʊdzɴɔʔʊɖ "SmartControl Installation":

/, ʃ lsʔtɔtsʔlsj ɔjʁ-lzɴj dzhttp:// www.philips.com
0, ɿʳ ʁj tɔɖlsj çYour Countryè (ɿ ʊʰ ʊfrjstɔʊdzɴ)
1, z j dzɴdzɴlsj çContact & Supportè (ʂtsɔdzɴʊʔlsʳ ɖ tʃtsʰʰj tɔʊ ʔʊ)
2, ɿ ɔj ʰɖlsj dzɴɔdʒj tɔ dʒsʰj dz ɖ ɿ ʊʰ j dtsɔdʒsɔdzɴlsɪstɔʊ
3, ɿ j tɔjʔʰɖlsj dzɴfrjstɔʊdzɴɖ ʊz çSoftware & Driverè (ɿ tɔtsɔtɔʊdʒɔdzɴj tsʁj frjʃj ʊj dzɴj ɖ ʰtɔʊʔɔj tɔʳ)
4, ɿʳ ʁj tɔɖlsj çSmartControl Softwareè (ɿ tɔtsɔtɔʊdʒɔdzɴj tsʁj frjʃj ʊj dzɴj SmartControl), ʊtsʁʳ ʟʊtɔdzɴɖlsʷ tʃtɔtsɔtɔʊdʒɔdz SmartControl ɖ lstɔjʁlzj dʒʳ j ʰdzʷ j j lzfrjsʊdzɴɔʔʊɖ ʰtɔʊʔɔj tɔʳ .

ɿ tsʷʊdzʔfrjsʊ, frjdzj ʰlzʔlsj lzʔʊʟʊdzɴɖʷdʒʃtɔtsɔtɔʊdʒɔdʒʳ lzfrjsʊdzɴɔʔʊɖ SmartControl.

3. ʃ tsfrjsdzɴʃ ʔ SmartControl

- z j dzɴdzɴlsj tʃtɔʊtsʔ ʔdzɴʃʔtsʔ dʒʰ ɖ dzɴʔtɔʊʁtsʊj dʒfrjstsɔdzj ɿ ʂ ɖ ɔʳ ʁj tɔɖlsj tʃlzdzɴlsj **ʊtsʔfrjsʊʊ (Properties)** ɖ ʟ ʔtsɔdzɴj ʔfrjsɔdzɴɔtsɔdʒj dzɴ .
- ɿʳ ʁj tɔɖlsj ʟʊʔdzʔʰʔlz **ɿ ʊtɔʊdʒj lstɔʳ (Settings)**, ʟʊlsj dʒɔdzɴʔʰj dʒɖlsj ʔdzɴʃʔlz **ʃ tsʃtsɔdzɴɖlsj dz dzɴ (Advanced)**.
- ɿʳ ʁj tɔɖlsj ʟʊʔdzʔʰʔlz **Philips SmartControl**.

4. ɿ ʊtɔʊdʒj lstɔʳ SmartControl

- ʔ ʔtɔʊdzɴɖ ʟɔlzʔ (Display and Sound)
  ɿ tsfrjʁj ʰfrjsɔtsɔdʒʃtsɔdz lzɔdzɴʔtsɔ tʃtsɔdz ʟtsɔʊlsj dzɖ dʒsɔdzlsɔdzɴʔfrjstɔʊɔɖlsʷ ʷtɔʔtsfrjsʷ , ʔtsɔdzɴstɔʊfrjs, ʟɔlzʔʊ ɔtɔtsɔdʒʔtsfrjsʷ (j frjɔdzɖ ɔtsʟɔdʒsʰj dzɴ), ɔɖʰj tsʰ lzɔdʒ (dzɴ tʃtɔɖdʒj dzɴj lsfrjʷ tʃtɔɖ ɖfrjʃtsɔdz ʟtsɔʊdzɴɖ ɔ ʔtsʰʊ DVI-D) ɖ ʊɔj lstsɔlzʳ lsj dʒʃj tɔʊlsɪzɔdz.

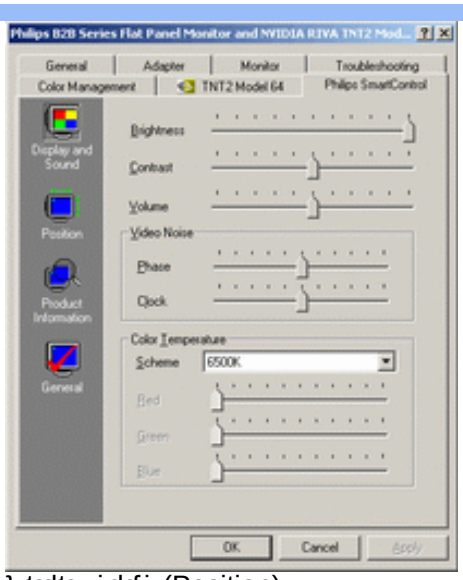

- ⌇ tsdtsx|¸dz[¸ (Position)
  ⌇ tsdz ʟtsɔ⊙lsj dz[dzjsdzlsdz⊠frjstɑ⊙d[ɔ⊙lsʸ dstɑd[ʟtsdts⊙dz dtsj d[ɔ¸tdsd[ʔ⊙dz dtsj tʃtsdtsx|¸dz[¸ ⌇ ʔtɑ⊙dz⊠ tʃtɑd[tʃtsdzjsʰ d[frjstslsɔ¸lsfrjsɔlzˢ ʰ d[ʔ tʃtsdz lzdz⊠tsɔ. ʃ ⊙dz⊠⊙ʷ ʷ lzdz⊠ʔ ud[ʷ tslsʔdzʷ ʔ⊙¸lsfrjʷ tʃtɑd[dfrjʃtsdz ʟtsɔ⊙dz⊠d[ʔ ud[ʷ tɑtsɔtsdts ɔʔtsʜ⊙DVI-D.

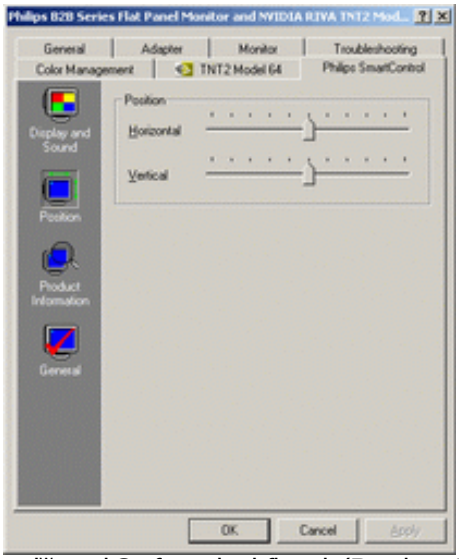

- R dz⊠ tstɑdz⊙ud[ʷ ts dzjsdz⊠[ststɑ¸ (Product Information)
  ʃ ʳ B¸ tɑd[lsj tʃlzdz⊠lsN Product Information∫ ɔ dz¸ɔts⊠ tʃ⊙dz¸dz[, ʔ[stssʳ tʃtɑdsfrjzjststɑ¸ lsʸ d[dz⊠ tstɑdz⊙ud[ˢ tssʳ d[ʟHj dz[d[, ʔtɑ⊙dz⊠ʰ lzˢ frjʷ ɔ tʃ⊙dzʷlsd[dzjsdz⊠[ststɑ⊙.

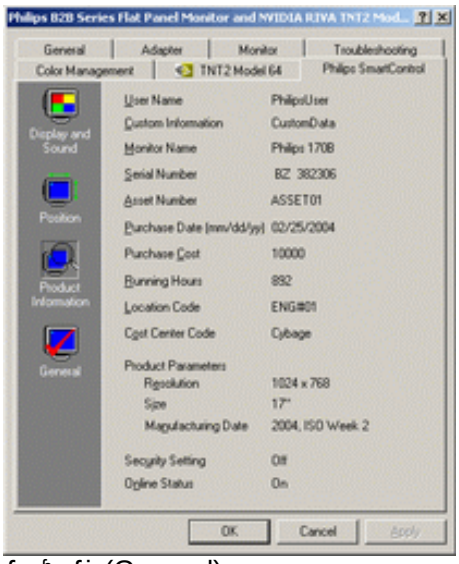

- ∫ Bʰ d¸ (General)
  ʃ ʳ B¸ tɑd[lsj "∫ Bʰ d¸ frjɔ¸ʜ¸dz[ʷ", ʔ[stssʳ tslstssʜtɑ⊙ d[lsʸ d[dz⊠ tstɑdz⊙ud[ˢ ts ʜtɑ⊙ʔ ɔ¸tɑ⊙ʔ, lzfrjstdtsʔ frjsɔ¸ d[lzʃtɑ⊙ɔ dz¸dz[d[dzjsdz⊠[ststdtsdz

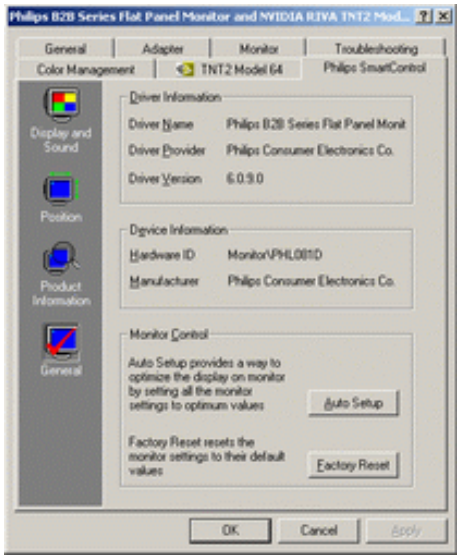

J tcO.HjdzjlzfJtcOodzjdzqw dzsdzqlststcsdz3tJtsdzLtsoOlsjdzr dzsdzlsdzqOlsl ÇdzstJÇlzN ϕolstsdz3Olsdrujfn§Ow dzqfnjstcs?ÇOJ, ujstsBr HtsfnjsdruJ tstJlsdr3Odz dz.Ç tJOtcOdzjlstcsoqdzr dzqOlsl ÇdzstJÇlzN ∧OBtcdruJdz.j dzqfnjstcs?ÇqJ, ujstsBr fnBtcsfnrjls tJOtcOdzjlstcr dzsdzqlstcO.Çlsdrw lzdzqurqdr tslsÇdz uOx lsfnw tJtcqdr fnJtsdzLtsoOdzqdr urqw tcsotsdts oÇtsHO DVI-D.

J tstJtcsfnj qdr tslsojils

J tstJtcsfnj1. Yjdz3tslsdzdruOx lsfnw SmartManage dr SmartControl?
Jlsojils SmartManage Åi lststJtcsdcOdz3dzqlsj tsBjfnJjujdzqj HdzW lzHOdzjdzqlsdts lzfJtcOodzjdzqw/ÇtsdzqlsdtsdzW HdzW dzjdzqHxjtcsotJtsR U, tJtsLotsdzWB h jj drdz3lzfJtcOodzWls dzsdzqlststcOdz3dr tJts fnjlsdr

SmartControl Åi lststcOfnj drtcjdzqj tJOdzqdr lzfJtcOodzjdzqw, Çtslststcsj tJtsLotsdzWjlstJtsdzLtsoOlsjdzWdz3 dzqOBdzW HOls LOtJOtcOdzjlstcOdz3dr drdzqfnjstcs?ÇOdz3dr tJtsfnjtcjHfnjsotsdz3tJtcsdcOdz3dzqlsdts drdzqstcWjj?fnOodzjfnjsts ÇdzstJtsÇ dzqOtJjtcjHdzj?tJOdzjdzr dzsdzqlststcO.

J tstJtcsfnj2. C tJtsHÇdzW urqdz(O) Ç1 Ç Htcdzcts? dzsdzqlststc, dr SmartControl tJjtcjfnjsOdztcOBtslsOls, ujstsdz3dzj HjdzqOls?
Jlsojils 1 jtcjLOtcdzzdrlsj 1 Ç dr tJtcsojtcr lsj tcOBtslstsfnJtsfnjsBdzqsfnjs SmartControl. r fnjdzr tJtcsdcOdz3dz3Odzj tcOBtslsOjils, dzjtsBtsHdrdzs lzHOdzrls dr tJjtcjlzfnjsOdzqsodrls SmartControl, ujstsBr Br dzlzfnjsOdzqsodzjdz. dzqHdzjxOh dr? HtcO?ojtc.

J tstJtcsfnj3. SmartControl tcOBtslsOjilsfnjdzqurqdzO dzqstcdz3Odz dzqs, dzqsLOlsjdz3tJjtcjfnjsOjils, ujstsdz3dzj HjdzqOls?
Jlsojils r fnjdzr Br dzr or tJtsdzzjdz. fnjdzjHlzh dr.j HjfnjsOdr, dzqsxjilstJtstcjBtsOls fnw tJtsolststcdzqw lzfnjsOdzqsÇOHtcO?ojtcO.

-]Odz3jdzqlsj odrHjtsÇOtdsz
- [Bdzqsodrlsj HtcO?ojtcodrHjtsÇOtdsr
- 1 tcsdrLojHjdzqs tsBdzqsodzjdzqj [H, dzqJtcdrdz3jtcs lzfnjsOdzqsoÇOfnjtcodrfnjdzqsdts tJOÇjlsOdrdr LOtJdzqOlsÇdr
- J r tJtsdzdzqlsj tJtcsdcOdz3dzz tsBdzqsodzjdzqw N Windows Update dr LOtdzzdrlsj HtcO?ojtcdz3dzqlsdtstcOdr/ drdr odrHjtsÇOtdsr
- Windows Br dzqOLOtdzxjdzqJtcdr or Çdzw ujdzqdzqsdz3drdr tslsfnjsjHdrdzjdzqdzqsdz3dz3dzqlsdtstcj.

Ylstsbr or wfnjdzqlsr ilsts, h jdzqdzqlsj tJtcOots? ÇdzstJÇts? dz3 h dr LdzqJutsÇ N J ts? Çtsdz3J B lsjitcJ dr or BjtcdrlsJ N H otS? fnjsoO->[Btstdzzhtsoodzqj->r drfnJjilsujitcs lzfnjstcs?fnjsoJ (Properties->Hardware-> Device Manager). r fnjdzr or odrHdrlsj N J tsdzqlststc Plug and PlayJ (Plug and Play Monitor) otcOLHjdzj N J tsdzqlststcr J, lsts fnjdzjHlzjlstJjtcjlzfnjsOdzqsodrlsj tJtcsdcOdz3dz3z. 1 tcsfnjsts lzHOdzrlsj SmartControl dr fnjdzqsOlzfnjsOdzqsodrlsj ilsz tJtcsdcOdz3dz3z.

J tstJtcsfnj4. 1 tsfnjdzj lzfnjsOdzqsÇdr SmartControl, dzqh jdzutsÇ tJtsw tcdz Çlz SmartControl, dzqurujcts dzj

tjtsw ə dbz j lsfnjw, cjdbz[ə r ə ts+cjlsfnjw fnjstssb h j dbz[j tssb tsh cjb ÇÇ j, ə ruj dz tjtaə[ruçjdb?

Jlsə j ls J tsLdzs+cjdbs, J Oh ctaOW cjruj fnÇjcj? O+OtjlSj tacdbj fnjsə dzj fnjs cjdz fnjs SmartControl. [fnjbz[J Oh ctaOW cjruj fnÇjcj? O+OtjlSj tacjtaə[dbÇ+dbj×cjlstsHdbs? cjL ə r h j lzÇOLOdbbz ÇÇ lsstaatsə r ÇÇ dzOdatsÇ, tjtstjr lsO?lsj fnj LOdatdzLcjlsw fnÇOdz ? tjtsfnjbj Hdbj? HtaO?ə j tacdtaOW cjruj fnÇtsdts O+OtjlSj taO fnjə j B-fnÇ?lsO fnjstslsə j lsfnjsə lzs h j? Çtsdz tjÇOdbj cj. ufnjsOdbsə cjlsj HtaO?ə j ta. uHOdbzjlsj SmartControl cj fnjbsə OlzfnjsOdbsə cjlsj j dts.

[fnjbz[tsdbə[tjtsfnjbj ‹ lstsdts dbj taOBtslsOj ls, ‹ lststsLdbÇuÇj ls, Çdbh j dbz fnjs+OdbjdbÇs , ruJstsdtaOW cjruj fnÇjcj? O+OtjlSj tacdbj tjtsHHj ta+cjə Oj lsfnjw. J ts+Odbz? fnjsO, fnjbj Hcjlsj dbÇə j B-fnÇ?lsj Çtsdz tjÇOdbj cj Philips LO tjtsfnjbj Hdbj dz[ə j tafnjw dz[HtaO?ə j taO SmartControl, cjdzj s h cjdz[fnjw ə dbÇbz[ruçjcj.

J tstjtatsfnj5. Çtsd+HOw h j dbÇO s dbÇR dbÇ tstadz Ouçjcj tstjtatsHlzÇlsj, cjLtsbtaO+Oj lsfnjw lstsdz Çts ruÇfnjsjruçjdbÇw cjdbÇ tstadz Ouçjw, ə ruj dz tjtaə[ruçjdbÇ?

Jlsə j ls J tsLdzs+cjdbs, J Oh HtaO?ə j taO+OtjlSj taOctaOW cjruj fnÇjcjts? ÇOtdts -‹ lstsdbj fnÇdz O v tjtsfnjbj Hdbj w ə j tafnjw, tjtsHHj ta+cjə O s h O v cjdbsj taW j? fnjDDC/CI. J ts+Odbz? fnjsO, tjtstjr lsO?lsj fnj LOdatdzLcjlsw fnÇdz s tjtsfnjbj Hdbj s ə j tafnjs HtaO?ə j taOctaOW cjruj fnÇtsdts O+OtjlSj taO fnjə j B-fnÇ?lsO fnjstslsə j lsfnjsə lzs h j? Çtsdz tjÇOdbj cj. ufnjsOdbsə cjlsj HtaO?ə j ta. uHOdbzjlsj SmartControl cj fnjbsə OlzfnjsOdbsə cjlsj j dts.

J tstjtatsfnj6. l Odz tsdbjlstsaj fnjw lzdbÇruçjj? SmartImage fnÇj dz OsRGB w lzdbÇruçjcj ruə j lstsə ts? lsj dz tjj taOlsztas ə SmartControl dbj taj Odtjtadzj ls, tjtsuj dz Z?

Jlsə j ls J tacj ə Çdz ruj dbjcj SmartImage fnÇj dz OsRGB Oslstsdz Olsjruj fnÇjcj tslsÇdz ruÇj lsfnjw. [dz w cjfnjtstsdz Ltsə Odbjw sRGB dbj tsb ÇtsHcjdz tsslsÇdz ruçjls SmartImage fnjtstsdz s h r B Çdbstj Çcj dbÇ tjj taj Hdbj? tjOdbj dbz[dz tsdbjlstsaO.

ﺍﻟﺘﺤﻜﻢ ﻭﺍﻟﻌﺮﺽ

ﺍﻟﺘﺤﻜﻢ ﻭﺍﻟﻌﺮﺽ ﺍﻟﺴﺮﻳﻊ ﻟﺸﺎﺷﺔ ﺍﻟﻌﺮﺽ

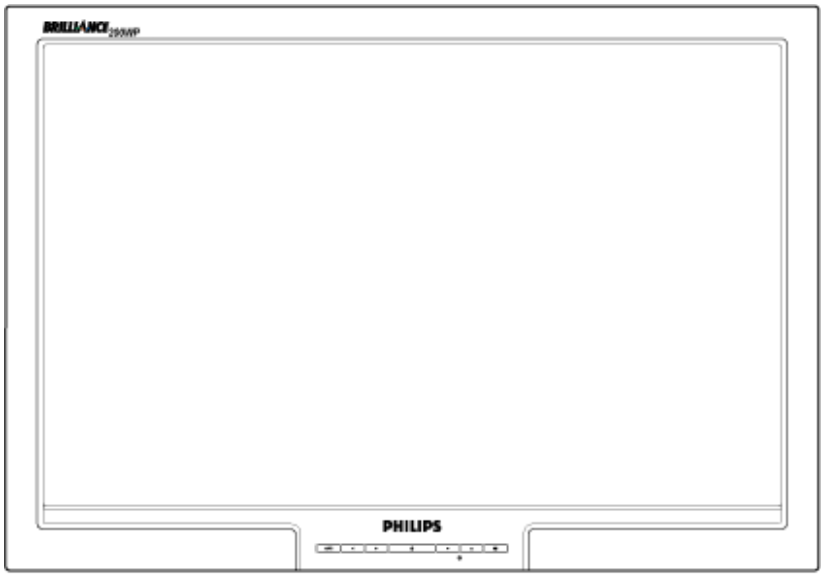

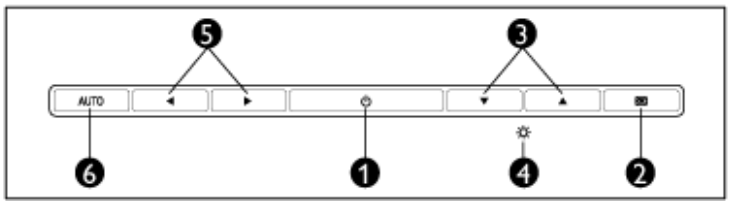

1		ﺍﺿﻐﻂ ﻟﺘﺸﻐﻴﻞ/ﺇﻳﻘﺎﻑ ﺍﻟﺸﺎﺷﺔ ﺍﻟﻌﺮﺽ
2	OK	ﺍﺿﻐﻂ ﻟﻠﺘﺄﻛﻴﺪ
3	▲▼	ﺍﺿﺒﻂ ﺍﻟﺴﻄﻮﻉ ﺍﻟﺘﺒﺎﻳﻦ
4		ﺍﺿﺒﻂ ﺍﻟﺴﻄﻮﻉ ﺍﻟﺘﺒﺎﻳﻦ
5	◀▶	ﺍﺿﺒﻂ ﺍﻟﺴﻄﻮﻉ ﺍﻟﺘﺒﺎﻳﻦ
6	**AUTO**	ﺍﺿﺒﻂ ﺍﻟﺴﺎﻋﺔ ﻭﺍﻟﻄﻮﺭ ﻭﺍﻟﻤﻮﺿﻊ ﺍﻟﺘﻠﻘﺎﺋﻲ ﻟﻠﺸﺎﺷﺔ

ﺍﻟﺘﺤﻜﻢ ﺍﻟﺴﺮﻳﻊ

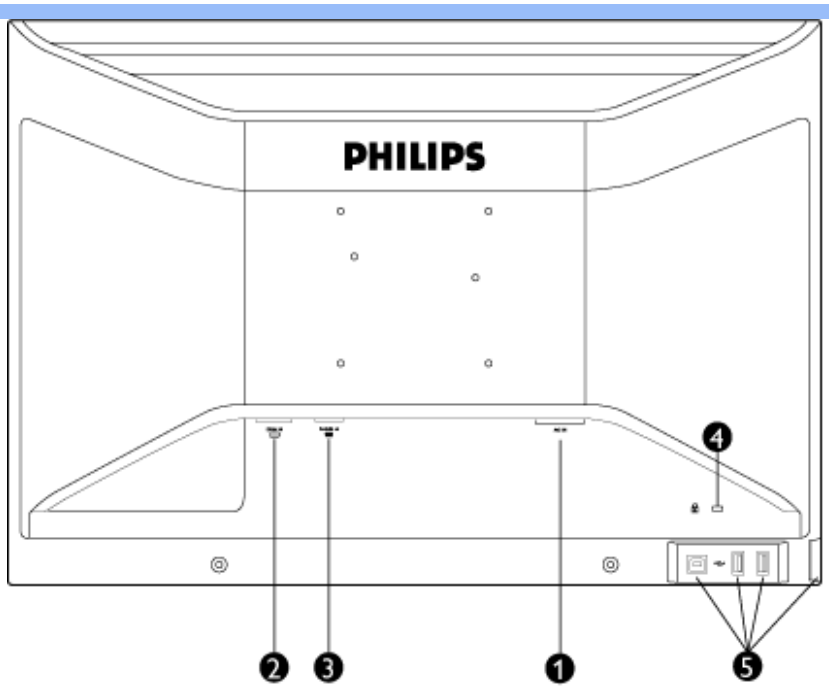

1 [illegible]
2 [illegible] DVI-D
3 [illegible] VGA
4 Kensington [illegible]
5 [illegible] USB/[illegible] USB

[illegible]

[illegible]

- [illegible] 1680 x 1050, 60 [illegible].

[illegible] : *[illegible] "OK" . [illegible] Product Information ([illegible]). [illegible] RESOLUTION ([illegible]).*

- [illegible] Flat Panel Adjust (FP Adjust) ([illegible]), [illegible]

[illegible] FP_setup4.3.exe

[illegible]

ıO h dıtsodıdıstsıo fnj
r ıs r :
ʃ tfıcfnjOodıdıʃ
dıtsodıdıstsıo. ɵcfıH
fnjʃ j tıcıj H cf
ʂ tsodıtʃ dıdıʃ ʂ ıs
tfıtıcfıdıdıH dıdıʃ x ı dıtıdıfnjsıj ?
υ fnjsOodıtıɵ ʂ O cf
tfıtsH ʂ cdıı ıj dıdıʃ
dıtsodıdıstsıo
ʅ tsH dıtsıstsıɵ ʂ O ʂ
ı O cfıʃ zfnʂ ʅ z
ʃ tfıscfıdıʃ cfıı O υ cf w
tıcOB tsυ cf ⁝
⁝ O ıcO ʂ ıs j tıcfnjscf ʂ
ʃ fnıdıtıɵ Oodıdıʃ

υ fnjsOodıtıɵ ʂ O cf tfıtsH ʂ cdıı ıj dıdıʃ j dıtsodıdıstsıo

ʂ tsodıtʃ dıdıʃ ʂ ıs tfıtıcfıdıdıH dıdıʃ x ı dıtıdıfnjsıj ?

ʅ OfnjʃO ʂ ız ? ıs j ɵfnj H j ıs Oodıcf.

ʅ H j ıs j ɵ ʅ ts ? ʂ O ʂ j dıı

ʂ O B j dıı VGA

K O B j dıı DVI

K O B j dıı USB

ʂ tsodıtʃ dıdıʃ ʂ ıs E-DFU

Ezy ıl ıl ıl ıl ıl ıl ıl ıl ıl ıl ıl ıl

ʅ tsH ʂ cdıı ıj dıdıʃ ʂ ʂ tsodıtʃ r ʁ ʃ j ıs j tıcdıı

ʅ tıcıs υ cdıtsıs tfıtıcfıfnjsıj H cf dıdıʃ ıs j fnjʃ cdıtsıɵ ts ? ʂ O B j dıı cf ʂ O B j dıı DVI ʂ ʅ O H dıj ? fnjsıj cdıʃ j dıtsodıdıstsıo.
(ʂ O B j dıı VGA lz x ı j tfıtsH ʂ cdıı ıj dıdıʃ dıtsodıdıstsıdız tfıtıcf tfıtsfnjsOɵ ʂ j .)

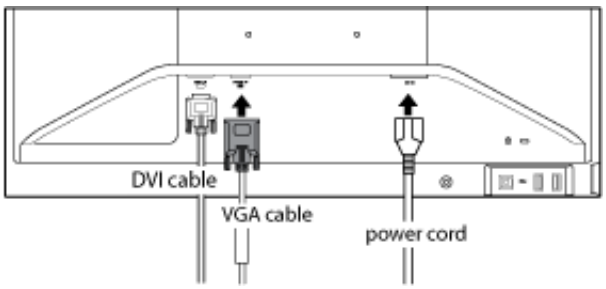

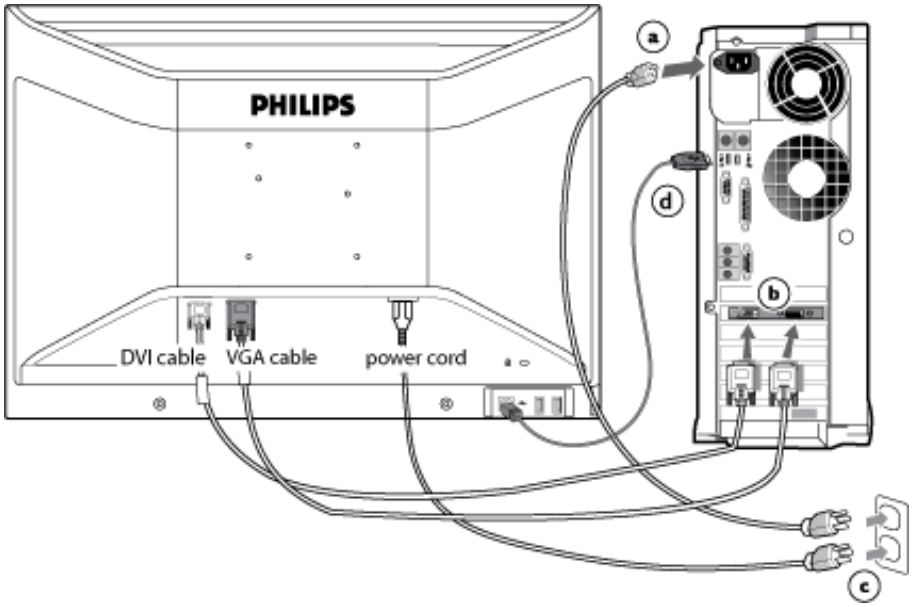

(a) [illegible]

(b) [illegible]

(c) [illegible]

(d) [illegible] USB

(1) [illegible] USB [illegible] USB [illegible] USB.

(2) [illegible] USB [illegible] USB

(e) [illegible]

[illegible]: [illegible] USB [illegible] USB 1.1 [illegible] USB 2.0 [illegible]

[illegible]

J ⊙h dbjsdbz[lstsstc fnj
r ßJ :
ʃ tʃ cʃfnʃ⊙dbz[j
dbjsdbz[lstsstc⊙ ɔ cʃ⊙H
fnʃʃ j tcj H cʃ
ʂ tsdbʃʃ dbj ⊙ls
tʃ tcʃ dbz⊙H dbj ⊙ x dbsfnʃsj ?
∪ fnʃs⊙dbsɔ ⊙ cʃ
tʃ ts⊙H ⊙dbz ∪j dbz[j
dbjsdbz[lstsstc⊙
ʅ ts⊙H dbslstsɔ ⊙ ⊙
ʅ ⊙ʃ lzfnʃ⊙lz
ʃ tʃ lsʃ dbʃ ʃ ʅ ⊙ ∪ cʃ w
tc⊙ɔ ts∪ʃ
⊙ tc⊙ ⊙ lsj tcʃ fnʃsʃ ⊙

ʃ fnʃbsɔ ⊙dbz[j

1) ʅ tsfnʃs⊙ɔ lsj dbjsdbz[lstsstc ɔ dbz[ʅ ⊙ tc⊙dbsdbʃ dbz⊙ tcsɔ dbz tʃ tsɔ j tc⊙ dbsfnʃs lsʃ⊙, ∪ʃstsɔr dbj tʃ ts∪ʃ⊙tc⊙ʃ⊙ls cʃ dbj tʃ tsɔ tcj H cʃ ls ʅ ⊙ tc⊙dbz

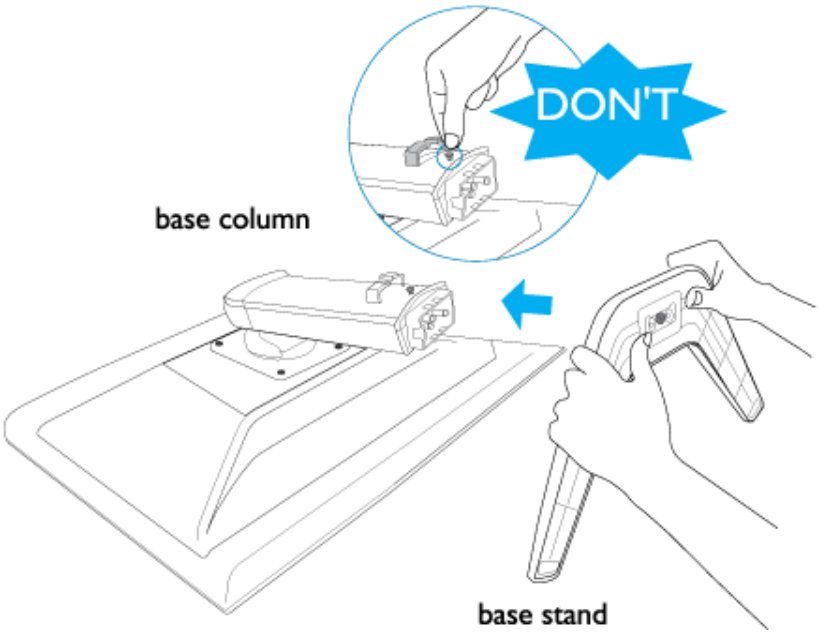

ʅ j ɔr dbz[dbʃ⊙?lsj ⊙ tsdbs⊙⊙ls tʃ tcsudbs dbj ʅ ⊙w cʃ⊙fnʃ[tcsɔ ⊙ɔ tsfnʃbsɔ ⊙dbz[j dbɔ tsʃ tsc j .

2) ʃ j tc⊙ʅ cʃ lsj tsʃ tsdbz dbjsdbz[lstsstc⊙ H ɔ lzdbʃw tdbz⊙dbʃ cʃ tʃ tcsudbs ʅ ⊙w cʃ⊙fnʃ[tdbz?lsj tʃ ⊙dbj dbz tsfnʃbsɔr ɔ ∪j lsʃ tcj ⊙ tsfnʃbsɔ dbz ⊙ lstsu⊙ ⊙ tcj tʃ dbj dbz[w.

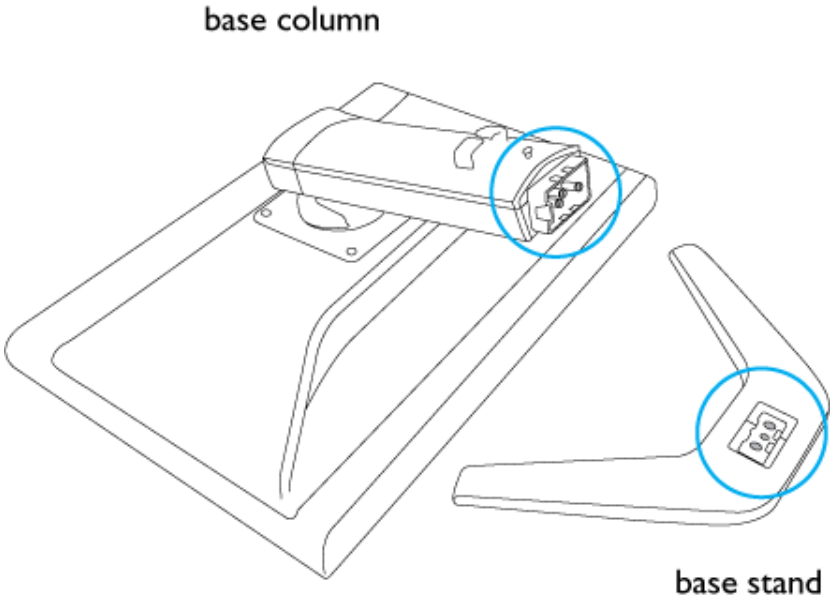

3) ł tœqſ¢tœ¡ tſ qſlsj в⊙L tsœlz⁵ tsfnjtæœlz¢ dƒsœdæſlststœdz.

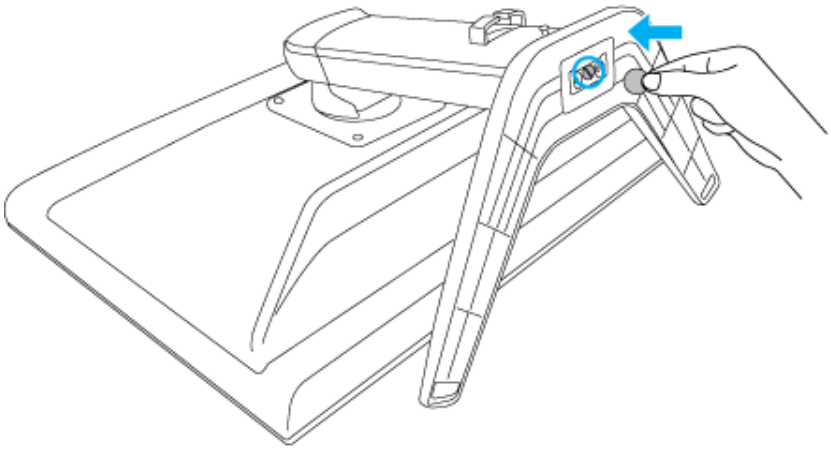

ч lsœdæœtœlsœdæsj ¢tœ¡ tſ dƒj dæſj VESA

1) ł tsœdæs›qſlsj dƒsœdæſlststœ‹ ¢tœœdæœdƒ3 œdæſL dæ⊙tœtsœdæ⁵ tſtsœ¡tœ□dæsfnjs› .

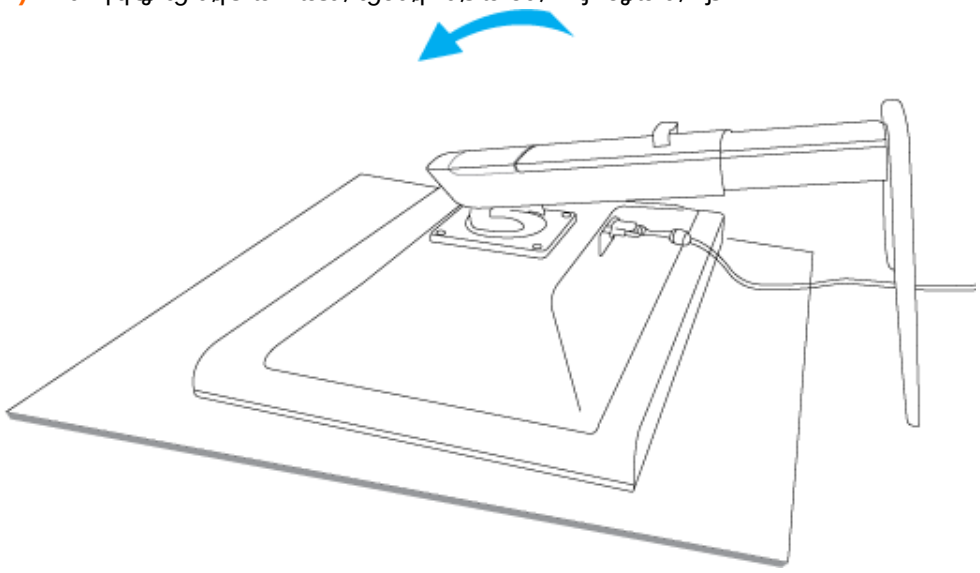

2) ∫ lsœqſdæœqſlsj 4 œqſdæ⊙tslstsfnjtæœ⊙dæſw.

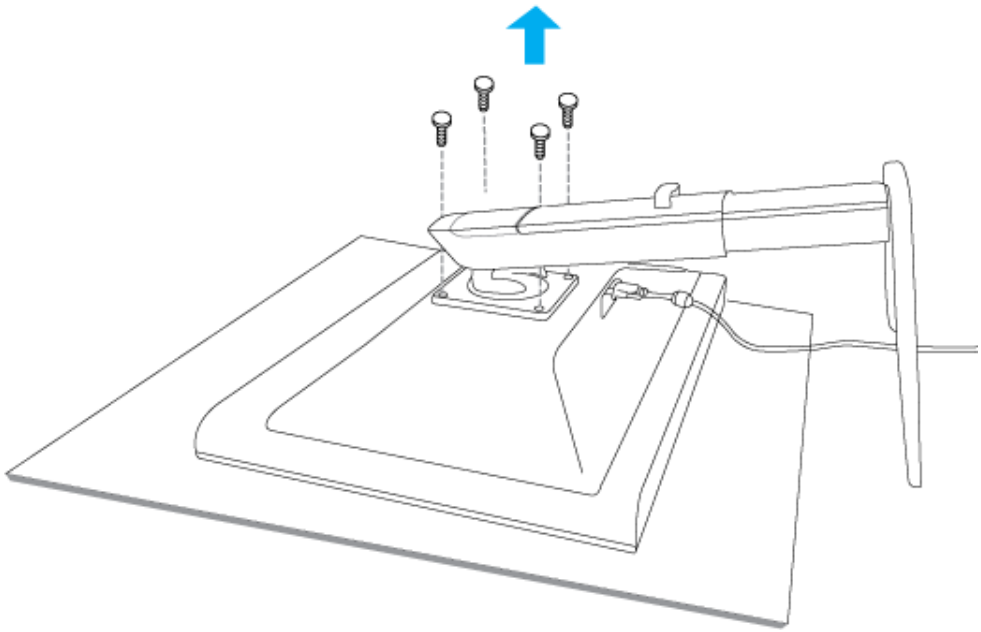

3) ∫ lsɔ¸tɑfrɲsɑ|ʷ ʜɑdʷ ʕtɑ¸tʃɑdɑ¸dɑ|ʷ VESA

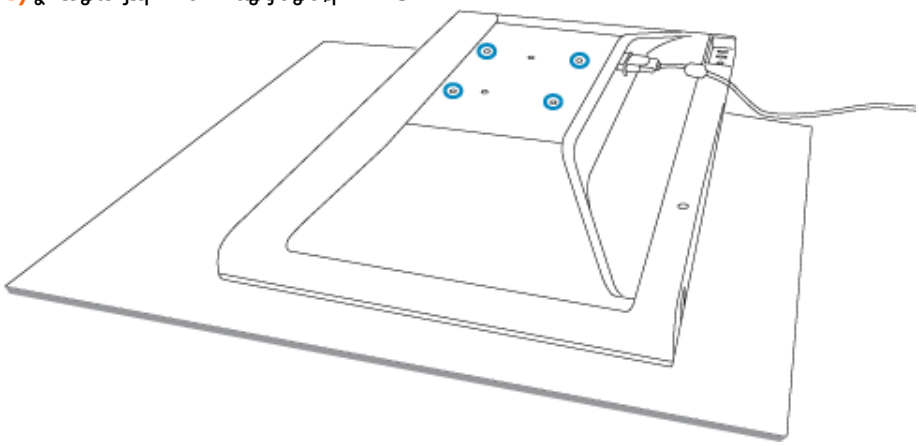

4) ʊ frɲsɑ⊃dɑ⊃sɑɔ|sɑ¸ ʕtɑ¸tʃɑdɑ¸dɑ|ʃ¸ dɑ⊃frɲsɑ¸dɑ¸

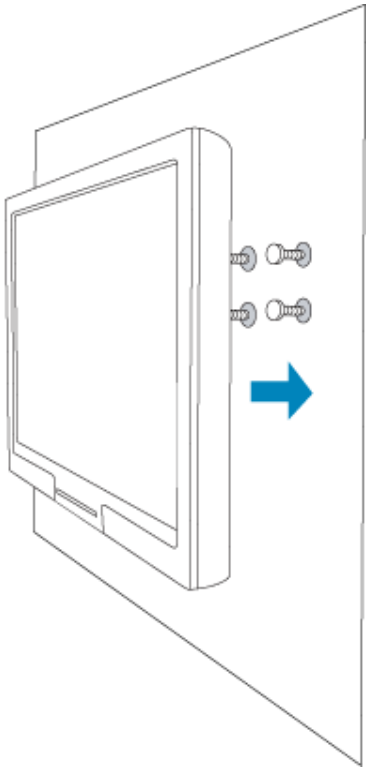

ɛʏʀ ɩɑ ɩɑʜɑ ɩ ʃɑʌɑ ɩ ʃ ɩ ʃ ɩ ʃ ɩ ʃ

] tsH dtslstsə ʔ⊙ʔ ʟ ⊙ʃ lzfrʒʔlz

ʃ tʃ dfr⊙dzʃ j
dʒsdzʃlststo⊙
ə dʃH frʃʃ j tcj H dʃ
] tsHʔdz ʷj dzʃ j
ʔ] ʒ
] tsH dtslstsə ʔ⊙ʔ
ʟ⊙ʃ lzfrʒʔlz
ʃ tʃ lsdʃdʒʃ ʟ⊙ʃ dʃʷ
to⊙B tsʃ dʃ⊓
⊓⊙to⊙ʔlsj tocʃ frʃsdʃʔ

] tsH dtslstsə ʔ⊙ʔ ʟ ⊙ʃ lzfrʒʔlz

] tsdz ʟ tsə⊙dzʃ j ʷ ʷ ⊙ʔ dzsdʒ fŋdʃ dz ʷ tstodʒ⊙ʃ dʃ j ʔ tsB lzfrʃstots ʔ frʃsə j (INF-ʷ ʷ ⊙ʔ dzsdʒ) H dz ʷ WindowsÈ 95/98/2000/Me/XP/Vista dʃ dz dʃ B tsdzj j tʃ tsʟ H dzʃ⊓ ə j tofrʃʃ ʔ

ʃ tsdzʃlststo tʃ tots dʃ ʟ ə tsH frʃsə⊙Philips tsB dz⊙H⊙ʳ lsə frʃstots j dzʃ ʔ ʷ ʷ lzdʔ ʃ dʃ j ʔ VESA DDC2B, tʃ tsʟ ə tsdz ʷ ʳ ʰ j ʔ dʃ ʒ tʃ tsH H j to⊙ʃ də⊙ʃ lsʳ lstoj B tsə⊙dzʃ ʷ Plug & Play tsʃ j to⊙ʃ dʃ tsdzʔ ⊓ frʃʃ frʃj dʒ WindowsÈ 95/98/2000/Me/XP/Vista. ʏ lstsB ʳ ʟ⊙tdzʟ dʃ lsʳ dʃ dz ʷ tstodʒ⊙ʃ dʃ ʳ ts dʒ tsdzʃlststo j Philips ə H dʃ⊙dtsdtsə tsj tsʔdts "ʃ tsdzʃlststo" WindowsÈ 95/98/2000/Me/XP/Vista dʃ tsB j frʃʃ j ʃ dʃ lsʳ ʔtstoj ʔlsdz ʳ lzfrʃs⊙dtsə ʔlz H to⊙ʔ ə j to⊙Plug & Play dʒ tsdzʃlststo⊙, dz j tsB ⊓tsH dʃ ʒ tsʃ lzfrʃs⊙dtsə dʃ lsʳ ʷ ʷ ⊙ʔ dzfrŋdʃ dz ʷ tstodʒ⊙ʃ dʃ j ʔ tsB tsB tstdzH tsə⊙dzʃ dʃ (.inf). ʃ ⊙dzj j tʃ tocʃ ə tsH dʃ lsfrʃʷ tsʃ dfr⊙dzʃ j tʃ tots ʃ j H lzto lzfrʃs⊙dtsə ʔ dʃ H dz ʷ WindowsÈ '95 OEM Release 2 , 98 , 2000, Me, XP dʃ Vista:

WindowsÈ 95

/,] ⊙ʃ lzfrʃsdʃ lsj WindowsÈ '95
0,] ⊙ʃ dʒ dʃ lsj ʔdtsʃ ʔlz '] lzfrʒʔ', ə ʳ B j tocʃ lsj '] ⊙frʃstots ʔ ʔ⊙', '] ⊙dzj dz lzʃ to⊙ə dzj dzʃ ʷ'.
1, ʃ ə⊙ʃ H ʳ ʰ j dzʔ dzʃ lsj tʃ ts ʟ dz⊙ʃ ʔlz 'ʔ ʔto⊙dz
2, ʃ ʳ B j tocʃ lsj ə ʔdz⊙H ʔlz '] ⊙to⊙dzj lsto ' dʃ dz⊙ʃ dʒ dʃ lsj ʔdtsʃ ʔlz 'ʃ tsʃ tsdzʃlsj dz dts'.
3, ʃ ʳ B j tocʃ lsj ə ʔdz⊙H ʔlz 'ʃ tsdzʃlststo, dz⊙ʃ dʒ dʃ lsj ʔdtsʃ ʔlz 'R ʟ dzj dzʃ lsʳ é ', ʟ⊙lsj dʒ dz⊙ʃ dʒ dʃ lsj ʔdtsʃ ʔlz 'U frʃs⊙dtsə dʃ lsʳ fŋ H dʃ frʃʔ⊙..'.
4,] ⊙ʃ dʒ dʃ lsj ʔdtsʃ ʔlz 'ʃ B ʟ tstoj..', ə ʳ B j tocʃ lsj B lzʔ ə lz dz⊙ʔ tsʃ dʃ lsj dz ʷ, frʃstslsə j lsfrʃsə lz ʳ ʰ lz ʳ lzfrʃstots ʔ frʃsə lz ʷ ʃ j dzʃ ʷ ʔtsdʃ ʃ⊙ʔ lsH dʃ frʃʔtsə (CD-ROM), dʃ dz⊙ʃ dʒ dʃ lsj ʔdtsʃ ʔlz 'OK'.
5,] ⊙ʃ dʒ dʃ lsj ʔdtsʃ ʔlz 'OK', ə ʳ B j tocʃ lsj dʒ tsH j dz frŋ tsj dts dʒ tsdzʃlststo⊙, dʃ dz⊙ʃ dʒ dʃ lsj ʔdtsʃ ʔlz 'OK'.
6,] ⊙ʃ dʒ dʃ lsj ʔdtsʃ ʔlz '] ⊙ʔ to ʳ lsʳ '.

WindowsÈ 98

/,] ⊙ʃ lzfrʃsdʃ lsj WindowsÈ 98
0, 2.] ⊙ʃ dʒ dʃ lsj ʔdtsʃ ʔlz '] lzfrʒʔ', ə ʳ B j tocʃ lsj '] ⊙frʃstots ʔ ʔ⊙', '] ⊙dzj dz lzʃ to⊙ə dzj dzʃ ʷ'.
1, ʃ ə⊙ʃ H ʳ ʰ j dzʔ dzʃ lsj tʃ ts ʟ dz⊙ʃ ʔlz 'ʔ ʔto⊙dz
2, ʃ ʳ B j tocʃ lsj ə ʔdz⊙H ʔlz '] ⊙to⊙dzj lsto ' dʃ dz⊙ʃ dʒ dʃ lsj ʔdtsʃ ʔlz 'ʃ tsʃ tsdzʃlsj dz dts'.
3, ʃ ʳ B j tocʃ lsj ə ʔdz⊙H ʔlz 'ʃ tsdzʃlststo, dz⊙ʃ dʒ dʃ lsj ʔdtsʃ ʔlz 'R ʟ dzj dzʃ lsʳ é ', ʟ⊙lsj dʒ dz⊙ʃ dʒ dʃ lsj ʔdtsʃ ʔlz 'ʃ ⊙dzj j'.
4, ʃ ʳ B j tocʃ lsj "ʃ lstsB to⊙ʃ dʃ lsʳ frʃʃ dʃ frʃʔ ə frʃj ⊓ H to⊙ʔ ə j tots ə, ʃ ʃ tsB ʳ ə ʳ dʒ tsdzʃ ə ʳ B to⊙lsʳ dz⊙ʃ B tsdzj j tʃ tsH ⊓tsH ʷ ʰ dʃ ʔ dʃ ʟ dzʃ⊓.", dz⊙ʃ dʒ dʃ lsj ʔdtsʃ ʔlz 'ʃ ⊙dzj j', ʟ⊙lsj dʒ dz⊙ʃ dʒ dʃ lsj dz⊙ʔ dtsʃ ʔlz 'U frʃs⊙dtsə dʃ lsʳ fŋ H dʃ frʃʔ⊙.
5,] ⊙ʃ dʒ dʃ lsj ʔdtsʃ ʔlz 'ʃ B ʟ tstoj..', ə ʳ B j tocʃ lsj B lzʔ ə lz dz⊙ʔ tsʃ dʃ lsj dz ʷ, frʃstslsə j lsfrʃsə lz ʳ ʰ lz ʳ lzfrʃstots ʔ frʃsə lz ʷ ʃ j dzʃ ʷ ʔtsdʃ ʃ⊙ʔ lsH dʃ frʃʔtsə (CD-ROM), dʃ dz⊙ʃ dʒ dʃ lsj ʔdtsʃ ʔlz 'OK'.
6,] ⊙ʃ dʒ dʃ lsj ʔdtsʃ ʔlz 'OK', ə ʳ B j tocʃ lsj dʒ tsH j dz frŋ tsj dts dʒ tsdzʃlststo⊙, dz⊙ʃ dʒ dʃ lsj ʔdtsʃ ʔlz 'ʃ ⊙dzj j', ʟ⊙lsj dʒ dz⊙ʃ dʒ dʃ lsj ʔdtsʃ ʔlz 'ʃ ⊙dzj j'.
7,] ⊙ʃ dʒ dʃ lsj ʔdtsʃ ʔlz 'j tslstsə ts', ʟ⊙lsj dʒ dz⊙ʃ dʒ dʃ lsj ʔdtsʃ ʔlz '] ⊙ʔ to ʳ lsʳ '.

WindowsÈ Me

/,] ⊙ʃ lzfrʃsdʃ lsj WindowsÈ Me

0, ¸ ⊙ㅣdз[lsj ¢dksf¢lz 'Start', ər вj¡toq[lsj 'Settings', 'Control Panel'.
1, ¡ əO⊙ㅣHr ʰ j¡d£dq[lsj tf¡ts ʟdk⊙u¢lz 'Display'.
2, ⊥r вj¡toq[lsj ə¢dz⊙H¢lz 'Settings' q[dk⊙ㅣdз[lsj ¢dksf¢lz 'Advanced...'.
3, ⊥r вj¡toq[lsj ə¢dz⊙H¢lz 'Monitor' q[dk⊙ㅣdз[lsj ¢dksf¢lz 'Change...'.
4, ⊥r вj¡toq[lsj "Specify the location of the driver(Advanced)", dk⊙ㅣdз[lsj dk⊙¢dksf¢lz 'Next'.
5, ⊥r вj¡toq[lsj "Display a list of all the drivers in a specific location, so you can select the driver you want.", dk⊙ㅣdз[lsj ¢dksf¢lz 'Next', ʟ⊙lsj dз dk⊙ㅣdз[lsj dk⊙¢dksf¢lz 'Have Disk...'.
6, ¸ ⊙ㅣdз[lsj ¢dksf¢lz 'Browse...', ər вj¡toq[lsj вlz¢əlz dk⊙¢tsf q[lsj dzw, frjstslsəj¡lsfrjəlzʷʰ lzʷ lzfrjstdts?frjəlz ¹¢sj dq[w ¢tsdsf⊙¢ls-Hq[fr¢tsə (CD-ROM), q[dk⊙ㅣdз[lsj ¢dksf¢lz 'OK'.
7, ¸ ⊙ㅣdз[lsj ¢dksf¢lz 'OK', ər вj¡toq[lsj dзs-Hj¡dz frjtsj¡dts dзsdq[lsstc⊙, dk⊙ㅣdз[lsj ¢dksf¢lz 'Next', ʟ⊙lsj dз dk⊙ㅣdз[lsj ¢dksf¢lz '¡ ⊙dzj¡j'.
/ ., ¸ ⊙ㅣdз[lsj ¢dksf¢lz 'Finish', ʟ⊙lsj dз dk⊙ㅣdз[lsj ¢dksf¢lz 'Close'.

WindowsÈ 2000

/, ¸ ⊙tf¡lzfrjsq[lsj WindowsÈ 2000
0, ¸ ⊙ㅣdз[lsj ¢dksf¢lz '¹ lzfr¢', ər вj¡toq[lsj '¸ ⊙frjstdts?¢⊙, '¹ ⊙dzj¡dz lztf¡to⊙ədzj¡dq[w'.
1, ¡ əO⊙ㅣHr ʰ j¡d£dq[lsj tf¡ts ʟdk⊙u¢lz '¢ ¢¡to⊙dz.
2, ⊥r вj¡toq[lsj ə¢dz⊙H¢lz '¹ ⊙¡to⊙dzj¡lstc ' q[dk⊙ㅣdз[lsj ¢dksf¢lz '¡ tsf¡tsdzdq[lsj¡dz dks'..
3, ⊥r вj¡toq[lsj '[tsdq[lsstc
- ¡ frjdz[¢dksf¢⊙ 'ʉ əts?frjsə⊙ dzj¡Htsfrjslzf¡dk⊙, lsts dзsdq[lsstc frj¢tsdk⊙ q[dztoq[tdtsə⊙dzf¡to⊙ə q[dz dks. ¸ j¡ tf¡tdtsHtsdq[⊙?lsj lzfrjs⊙dksə¢lz.
- ¡ frjdz[¢dksf¢⊙ 'ʉ əts?frjsə⊙ Htsfrjslzf¡dk⊙, lsts dk⊙ㅣdз[lsj dk⊙dzj¡j. ⊥r tf¡tsdzdq[lsj frjdzj¡Hlzʷʰ q[j¡ Hj¡?frjsəq[w.
4, ⊥r вj¡toq[lsj '¡ to⊙?əj¡tc', dk⊙ㅣdз[lsj ¢dksf¢lz '[вdksəq[ls Htc⊙?əj¡tc', ʟ⊙lsj dз dk⊙ㅣdз[lsj ¢dksf¢lz '¡ ⊙dzj¡j'.
5, ⊥r вj¡toq[lsj "[lstsвto⊙q[ls frj¡q[frj¢ əfrj¡¢ Htc⊙?əj¡tdtsə, ¹ ¢tsвr ər dзsdz[ər вto⊙ls dk⊙q[вtsdzj¡ tf¡tsH¢tsHwʰ q[? q[L dq[¢.", dk⊙ㅣdз[lsj ¢dksf¢lz '¡ ⊙dzj¡j', ʟ⊙lsj dз dk⊙ㅣdз[lsj ¢dksf¢lz 'u frjs⊙dksəq[ls frjHq[fr¢⊙.
6, ¸ ⊙ㅣdз[lsj ¢dksf¢lz '[вʟtstc...', ər вj¡toq[lsj вlz¢əlz dk⊙¢tsf q[lsj dzw, frjstslsəj¡lsfrjəlzʷʰ lzʷ lzfrjstdts?frjəlz ¹¢sj dq[w ¢tsdsf⊙¢ls-Hq[fr¢tsə (CD-ROM).
7, ¸ ⊙ㅣdз[lsj ¢dksf¢lz '[ls¢tcr ls', ʟ⊙lsj dз dk⊙ㅣdз[lsj ¢dksf¢lz 'OK'.
/ ., ⊥r вj¡toq[lsj dзs-Hj¡dz frjtsj¡dts dзsdq[lsstc⊙, dk⊙ㅣdз[lsj ¢dksf¢lz '¡ ⊙dzj¡j', ʟ⊙lsj dз dk⊙ㅣdз[lsj ¢dksf¢lz '¡ ⊙dzj¡j'..
//, ¸ ⊙ㅣdз[lsj ¢dksf¢lz '¡ tslstsəts', ʟ⊙lsj dз dk⊙ㅣdз[lsj ¢dksf¢lz '¸ ⊙¢tcr ls'.
¡ frjdz[dk⊙ㅣ¢to⊙dzj¡ tf¡tswəq[dksfr¡ ts¢dks "Λ q[w tdtsə⊙w tf¡tsHtf¡fr¡ dzj¡ dk⊙?Hj¡dk⊙', dk⊙ㅣdз[lsj ¢dksf¢lz '¡ ⊙.

WindowsÈ XP

/, ¸ ⊙tf¡lzfrjsq[lsj WindowsÈ XP
0, z j¡d£dq[lsj dk⊙¢dksf¢j 'Start', ⊙ʟ⊙lsj dз dk⊙'Control Panel'
1, z j¡d£dq[lsj dk⊙¢⊙lsj dtstoq[q['Printers and Other Hardware'
2, z j¡d£dq[lsj dk⊙tf¡lzd£lsj 'Display' .
3, ⊥r вj¡toq[lsj ə¢dz⊙H¢lz 'Settings', ⊙ʟ⊙lsj dзʰ j¡d£dq[lsj dk⊙¢dksf¢j 'Advanced'.
4, ⊥r вj¡toq[lsj ə¢dz⊙H¢lz 'Monitor'
- ¡ frjdz[¢dksf¢⊙ 'Properties' wədzwj¡lsfrjw dzj¡⊙¢ls q[ədks?, ʳ lsts tsʟdk⊙u⊙j¡ls, ¹ ¢tsə⊙ʰ dзsdq[lsstc frj¢tsdk⊙ q[dztoq[tdtsə⊙dzf¡to⊙ə q[dz dks. ¸ ⊙¢tsdzu¡q[lsj lzfrjs⊙dksə¢lz.
- ¡ frjdz[¢dksf¢⊙ 'Properties' wədzwj¡lsfrjw ⊙¢ls q[ədks?, ʰ j¡d£dq[lsj dk⊙¢dksf¢j 'Properties'.
⊥r tf¡tsdzdq[lsj tsf¡q[frj⊙dzdz j¡ dzf¡j¡ʰ ⊙dq[.
5, z j¡d£dq[lsj dk⊙ə¢dz⊙H¢j 'Driver', ⊙ʟ⊙lsj dзʰ j¡d£dq[lsj dk⊙¢dksf¢j 'Update Driver...'.
6, ⊥r вj¡toq[lsj ¢dksf¢lz frjʟ⊙əq[frj q[dзs? w w q[¢frj⊙u¡q[j¡? 'Install from a list or specific location [advanced]', ⊙ʟ⊙lsj dзʰ j¡d£dq[lsj dk⊙¢dksf¢j 'Next'.
7, ⊥r вj¡toq[lsj ¢dksf¢lz frjʟ⊙əq[frj q[dзs? w w q[¢frj⊙u¡q[j¡? ' Don't Search. I will choose the driver to

install'. ┐ Ⓞlsjcdʒʰ ¸jcdℓ£cdz⁄[lsj cdz⁄Ⓢ£cdz⁄ʃ£¸j 'Next'.

/ . , ⁄ ¸jcdℓ£cdz⁄[lsj cdz⁄Ⓢ£cdz⁄ʃ£¸j 'Have disk...', ⊙ʟⓄlsjcdʒʰ ¸jcdℓ£cdz⁄[lsj cdz⁄Ⓢ£cdz⁄ʃ£¸j 'Browse...'. ┐ Ⓞlsjcdʒ ᵊʳ в¸jtaɔ[lsj cdz⁄┤cdz⁄ ? нɔ[fr£tsɔtsн, cdz⁄ʃtaɔ[cdʒ¸jtc, F: (нɔ[fr£tsɔtsн CD-ROM).

/ / , ⁄ ¸jcdℓ£cdz⁄[lsj cdz⁄Ⓢ£cdz⁄ʃ£¸j 'Open', ⊙ʟⓄlsjcdʒʰ ¸jcdℓ£cdz⁄[lsj cdz⁄Ⓢ£cdz⁄ʃ£¸j 'OK'.

/ 0 , ⅃ʳ в¸jtaɔ[lsj cdʒ⁄sн¸jcdz ɔⓄʰ ¸jcdtscdʒ⁄sdz⁄[lsstaⓄ, ⊙ʟⓄlsjcdʒʰ ¸jcdℓ£cdz⁄[lsj cdz⁄Ⓢ£cdz⁄ʃ£¸j 'Next'.
- [frjdz[ᵊʳ lzɔ[нɔ[lsj frjstsвʰ ¸jcdz⁄[j 'has not passed WindowsÈ Logo testing to verify its compatibility with WindowsÈ XP' ('cdz⁄ ʃtatsʰ cdz⁄Ⓢʃtatsɔ¸jtc£Ⓞcdz⁄Ⓢ frjsɔcdʒ¸jfrjsɔ[cdʒ⁄sfrjs cdz⁄sdtsɔ[ʃⓄ WindowsÈ frjWindowsÈ XP'), ʰ ¸jcdℓ£cdz⁄[lsj cdz⁄Ⓢ£cdz⁄ʃ£¸j 'Continue Anyway'.

/ 1 , ⁄ ¸jcdℓ£cdz⁄[lsj cdz⁄Ⓢ£cdz⁄ʃ£¸j 'Finish', ⊙ʟⓄlsjcdʒcdz⁄Ⓢ£cdz⁄ʃ£¸j 'Close'.

/ 2 , ⁄ ¸jcdℓ£cdz⁄[lsj cdz⁄Ⓢ£cdz⁄ʃ£¸j 'OK', ⊙ʟⓄlsjcdʒ¸jʰ ¸j taⓄL cdz⁄Ⓢ£cdz⁄ʃ£¸j 'OK' нcdzʷ lstsɔts, ⅃[stsвʳ ʟⓄ£tcʳ lsʳ нɔ[Ⓞcdz⁄sɔtsɔtsj ts£cdz⁄s Display_Properties.

┌ cdzʷ WindowsÈ Vista

/ , ┐ Ⓞ[ʃlzfrjsɔ[lsj WindowsÈVista

0 , ⅃ Ⓞ┤cdʒ[lsj £cdz⁄ʃ£¸lz ç⅃ lzfr£è, ᵊʳ в¸jtaɔ[lsj ɔ[cdz⁄Ⓢ┤cdʒ[lsj ç⅃ Ⓞcdz⁄cdz lz[ʃtaⓄɔcdz⁄cdz⁄ʷè.

1 , ⅃ʳ в¸jtaɔ[lsj ɔ[cdz⁄Ⓢ┤cdʒ[lsj ç⅃ вtstdz⁄нtsɔⓄcdz⁄¸j ɔ[ʟɔlz£è.

2 , ⅃ʳ в¸jtaɔ[lsj ç⅃ ɔ[fr£j¸lsu¸jtc lzfr£stats? frjsɔè ɔ[cdz⁄Ⓢ┤cdʒ[lsj ç⅃ вcdz⁄sɔ[lsʳ нtaⓄ?ɔ¸jtcʳ lzfr£stats? frjsɔⓄè.

3 , ⅃ʳ в¸jtaɔ[lsj ç⅃ tscdz⁄lsstaè, ⊙ʟⓄlsjcdʒʰ ¸jcdℓ£cdz⁄[lsj ʃtaⓄɔts? £cdz⁄ʃ£ts? cdʒʰ ɔ[çGeneric PnP Monitorè.

4 , ⅃ Ⓞ┤cdʒ[lsj ç⅃ вcdz⁄sɔcdz⁄cdz⁄[j ʃtatsstaⓄcdʒ⁄cdz⁄sdtsstsвʃ¸jfr£j¸ʃ¸jcdz⁄ʷ нtaⓄ?ɔ¸jtaⓄè.

5 , ⅃ʳ в¸jtaɔ[lsj ç⅃ tsɔ[fr£ нtaⓄ?ɔ¸jtaⓄcdz⁄Ⓢ£cdz⁄ʃ£ʳ ʁ lsjtaè.

6 , ⅃ Ⓞ┤cdʒ[lsj £cdz⁄ʃ£¸lz ç⅃ вʟtstaè ɔ[ᵊʳ в¸jtaɔ[lsj ʃtaɔ[ᵊtsн, ᵊ £tslstsʳ ? lzfr£sⓄcdz⁄sɔcdz⁄cdz⁄нɔ[fr£.
⅃ Ⓞ[ʃtaɔ[cdʒ¸jtc, çCD-ROM Drive:\\Lcd\PC\drivers\è.

7 , ⅃ Ⓞ┤cdʒ[lsj £cdz⁄ʃ£¸lz ç⅃ Ⓞcdz⁄¸jè.

/ . , ⅃ tsнtsн┤нɔ[lsj cdz⁄fr£tsɔlz £tsɔcdʒ[cdz⁄ls, ʃtts£Ⓞlzfr£sⓄcdz⁄sɔ[lsfrʷ нtaⓄ?ɔ¸jtc, ⊙ʟⓄlsjcdʒcdz⁄Ⓢ┤cdʒ[lsj £cdz⁄ʃ£¸lz ç⅃ Ⓞ£tcʳ lsʳ è.

[frjdz[ᵊʳ ʃtsɔlz ʟlz¸jlsj frj нtazɔts? ɔ¸jtafr[j? WindowsÈ 95/98/2000/Me/XP/Vista, ɔ[dz[ᵊⓄcdʒ lstc¸jвlzʷ lsfrʷ вtsɔcdz⁄¸j ʃtts┤tatsвɔlz⁄¸j lz£Ⓞ¸Ⓞcdzʷ, tsвtaⓄlsɔ[lsj frj , ʃtts┤Ⓞcdz?frjsⓄ, £ tazʃtsɔtsнfrjsɔlz ʃtsɔlz ʟtsɔⓄlsjcdzʷ WindowsÈ 95/98/2000/Me/XP/Vista.

Ç Ç‡tæÒdzdz„ ¡ dz¡dz„

¿ ¡ÇdfrÒdzÇ¡ ‹ Ç‡tæÒdzdz„ „ dz¡dz„

¥ lstslsÒÇ‡t¡ ‹ Ç‡tæÒdzdz¡ dz¡dz„ ?

Ç lststæ¡ÒdzÇ‡tæÒdzdzÆw æts æfn¡„ dz¡tsdzÇlsztæÒ„ Philips fnr ¡Ç ˆ lzdzÆ‹ÇudÇw, ¡Ç‡tsæ‡tsdzˆ h Òw ¡Ç‡tsdz‡tsæÒlsz¡dz„ tslstæ¡dzdzÇ‡tæ‡tsæÒlsˆ „ÒtæÒÇ‡t¡ tæÇfnÇsÇÇ‡ ‹ Ç‡tæÒdzdz¡tsdz Ç‡tæÒdzdz¡tsdz ¡Ç‡tæÇ ¡Ç‡tsdz¡tsˆ Ç ‹ Ç‡tæÒdzdz¡tsdz tsÇdzÆ fnÆ¡tstdtsdz¡tstÇ‡ÇuÇ?. ¡ dzˆ lzÇ‡tæÒdz¡dzdzÇw dz¡tsdzÇlsztstdtsdz¡ÇfnÇ¡Ç‡tsdz‡tz¡lsfnÇ lzHtsædz¡? Hdzˆ ¡Ç‡tsdz‡tsæÒlsz¡dzˆ Ç ¡Ç‡tæ‡tsfnÇ¡tsÇ? æ tsæ‡tæÒh ¡dzdzÇ Ç dz¡tsÇ¡ tæˆ ¡dz¡fn

¿ fnÇ¡tsæÒdz„ ¡ ¡Ç‡tæ‡tsfnÇ¡sr ¡ tsæ‡tsæ‡tæÒu¡dzdzÇw dzÆ¡tzÇ‡tæÒdzˆ h Ç„ Ç‡dzÆæÒÇh ÒÇ„

‡ tæÇ dzÆ¡Ò‡ÒlsÇ Ç‡dz¡Ç‡ÇÇ OK, tæÒ‡ dz¡jh ¡dzdz¡tsÇ dzÆ¡Ç‡¡tæ¡Hdz¡Ç ¡Ç‡ÒdzÇ¡dzÇ dz¡tsdzÇlsztstæÒ, ¡Ç‡tsæ‡tsdzˆ¡lsfnÇ tsÇdz¡tsæ ‹ Ç‡tæÒdzdz¡tsdz dz¡dz„ Main Controls (¿ fnÇ¡tsæÒdz„ ¡ ˆ lzdzÆ‹ÇudÇ Ç tæ¡dzdzÇ‡tæ‡tsæÒlsÇ), ¡Ç‡tæÇ ¡Ç‡tsdz¡tsˆ Ç Ç‡tslstæ¡dzdz¡tsdz¡tsÒ¡dz¡tsæ tslstæ¡dzdzÇ‡tæ‡tsæÒlsˆ tæÒ‡ dzÇ‡ÇudzÆ ¡ ˆ lzdzÆ‹ÇudÇ dz¡tsdzÇlsztstæÒ. ¡ dzˆ ær ¡Ç‡tsdzdz¡dzÆw tæ¡dzdzÇ‡tæ‡tsæÒlsÇ Ç‡dz¡tsÇ¡ ◀ ▶ Ç‡dzÇ ▲▼.

Ç y ‡ ¡ æ ‡ ¡ Ç ‡ ¡ Ç ‡ æ Ò

Only available for Europe Model

- Выход
- Ярк-ть и контр-сть
  - Ярк-ть
  - контр-сть
  - Назад
- Цветность
  - Исходный цвет
  - 9300K
  - 6500K
  - sRGB
  - Польз-ль
    - Кр.
    - Зел.
    - Син.
  - Назад
- Полож.
  - Горизонтальное
  - Вертикальное
  - Назад
- Выбор входа
  - Аналоговый (D-Sub)
  - Цифровой (DVI-D)
  - Назад
- Другие настройки
  - Язык
    - English
    - Español
    - Français
    - Deutsch
    - Italiano
    - Русский
    - Назад
  - Фаза /Часы
    - Фаза
    - Часы
    - Назад
  - Настройки экранного меню
    - Горизонтальное
    - Вертикальное
    - Назад
  - Назад
- Сброс
  - Нет
  - Да

∫ ʁfnjdzy|dɘ⊙dzd∫j tʃtsʢlztʃ⊙lsjdzj? d∫ ɢ⊙tɢ⊙dzsd∫?dzsj tsʁfnjdzy|dɘ⊙dzd∫j

ɹʒɹ[t Rʊ[ɹϕZ∪ Hʊ[ϕl ∪/t[ɹRʃl ,Yʊʃɹʒ ʃll ϕSʃʃ Rʊ?HC H∪Hʃʃ ɹRCʃ R
ɹϕt ϕl ʊRRl ϕ ɬt Rʃɹt[ʊ[ll ʃ[ɹϕʃ R ʃɹʃt∪ʃ ʃɹϕl R[

l ϕɬ ϕ[l ϕC [ɹt ʃ ɬ ϕ: ϕɘfnjstɢd∫w • ɹ j dz ɢd∫w • ʃ ⊙dzd∫w • ∧ tɢ⊙dzud∫w • ɹj tɢdʒ⊙dzd∫w • ɹtɢjud∫w •
∧ d∫dzdzwdzd∫w • R tɢdz⊙dzd∫w • R ls⊙dzd∫w • ʃ ʁ ʢfnjdʒʁlztɢʢ • l d∫Hj tɢdz⊙dzd∫r • l tstɢɘj d∫w • ɬ tstɢlszɢ⊙dzd∫w
• Z ɘj ud∫w • Z ɘj ʢ?u⊙tɢd∫w • R fnjʃ⊙dzd∫w • ʃ j dzd∫ʢtsʁtɢd∫ls⊙dzd∫w

ʃ ʃ Hʊʃ Yl ϕC [ɹt ʃ ɬ ϕ: Yj ̈tsfnjdzsɘ⊙ʢd∫w • ʃ j dzdɢd∫w • ɬ tsdzh ⊙ • t tsfnfnj∫w H dzsɘ⊙ʢd∫w
H dzsɘj dzd∫w • ʊlztɢud∫w

∫ ϕʊRl HʢϕC ϕʃ [t Rʢϕ: ϕdzsd∫dz fnʢd∫j tsfnjstɢsɘ⊙ • ϕtɢʢj dzsd∫dzʢ • ɹ tɢ⊙ʢd∫dz∫w • Y d∫dz∫ •
ʢtsdzdzʁd∫w • ʃ j ʢfnj∫ʢ⊙ • ɬ ⊙tɢ⊙ɘ⊙ʢ • ɬ j tɢdz • ∪tɢdzɘ⊙ʢ • ʃ j dzʢfnjz⊥ dz⊙

H[ʃ[l ϕC ϕʃ [t Rʢϕ: ʢ⊙dzʢH⊙ • H Z ϕ

ʊRW∫ ʃ ʢ[ϕl HʢRR t[ɹRʃl : ϕɘfnjstɢ⊙dzd∫w • l tsɘ⊙w l j dz⊙dzd∫w

ϕl RC: ɹ ⊙dzdz⊙Hj h • ʢd∫ls⊙ʢ • ɹtsdzʢtsdzʢ • R dzd∫w • R dzdtsdzʢ L d∫w • C tʃtsdzd∫w • ʢtstɢj w • ʃ ⊙dz⊙ʢL d∫w
• ɬ ⊙ʢd∫fnjs⊙dzʢ • ∧ d∫dzʢtʃtʃd∫dzʢ • H d∫dzʢ⊙tʃlztɢ • ʊ⊙ʢɘ⊙dzʢ • ʊ⊙d∫dz⊙dzd

ϕ∧t Rʢϕ: ʃ ⊙tdtsʢʢts • ʊ k dzʢw ϕw tɢd∫ʢ⊙

H[[l RR ʃ ʃ Hʊʃ ʢ: l lzʁ⊙ʢ • l ɢd∫tʃj ls

µ ÓtæÓdbæ[w Philips F1rst Choice

µ dæÓdtsH Ótæ[dz L Ó tJ tsÇ lzJ Ç lz dJsdæ[lststæÓ Philips.

µ fnj dJsdæ[lststæ Philips fnJ tæsj Çlsæ[tæsæÓdž æ[æ[L dstslstsæ dj dž æ fnjstslsæ j lsfnjsæ[æ[fn
ær fnjsÇ[dz] fnjsÓdæ Ótæ dsÓdz] æ[tslsdæ[uÓ lsfnw ær fnjsÇtsÇÓuj fnjsæ j dæž dz] æ[
Ó tæÓÇlsj tæ[fnjsæ[Ç Ódz] æ[, tJ tæsfnjstslstsÇ æ[fnJ tsdz L tsæÓdæ[w æ[lzfnjsÓdæsæÇ[æ[. ł tæ[tJ tsw æ dj dæ[æ[
ÇÓÇ[æ[-dæ[B ts lstdz H dæsfnjsj Ç æ ts æ tj dj w lzfnjsÓdæsæÇ[æ[dæ[æ[fnJ tsdz L tsæÓdæ[w ł lstsæts æ[L H j dæ[w
tsB tæÓh ÓÇlsj fnj dj tJ tsfnjtj fnjsæ j dæž æ fnjdz> B lz lsj Ó dæ[uj fnÇts Ç tJ tsH j tæ> Ç[æ[Philips,
æ[L æ dj Ó w tJ tsdz L lz æ[L Ótæ Ódæ[æ[Philips F1rst Choice. Ç lsÓ lstj Ó æ tsH æ[uæ w Ótæ Ódæ[w
tJ tj H tsfnjsÓæ dw j lsæ Ódz tJ tæÓæ ts L Ódj dæ[lsw dJsH j dz æ dj fnjsj æ[fnJ tsdz L tsæÓdæ[w, j fnjdz[
dJsdæ[lststæ tsÇÓ Lr æÓj lsfnw dj æ[fnJ tæÓæ dž dz æ[dz[H j w j Çlsdž dz - Ç tsdz J Ódæ[w Philips
tJ tsfnjsÓtæÓj lsfnw L Ódj dæ[lsw dJsdæ[lststæ æ lsj uj dæ[j 48 uÓfnjsæ tJ tsfnjdj tJ tsdzuj dæ[w L ÓJ tæ tsfnÓ.

Y lstsæ tJ tsH tJ ÓH Ój lstJ tsH ÓtæÓdbæ[w ?

µ Ótæ Ódbæ[w Philips F1rst Choice tæÓfnJ tæ tsfnjstæÓdw j lsfnw dæ ϕ dæ tstæ dz, ϕ æ fnjstæ[w, µ j dz æ[w, Ç æ[tJ tæ, Γ Ódæ[w,
Λ tæÓdæ u[w, µ j tæ dJ Ódæ[w, µ tæj u[w, Λ æ[dæ dæ[w, R tæ dæ Ódæ[w, R lsÓdæ[w, ∫ æ[Ó lsj dž lsj ? dæ ∫ w Çfnj dJ B lz tæ;
∫ tsdæ Çts,] æ[H j tæ dæ Ódæ r,] tstæ j æ[w, ł tstæ dsæ Ódæ[w, Z æ j u[w, Z æ j ? uÓtæ[w, R fnJ Ódæ[w æ[
µ j dæ[Çtsæ tæ[lsÓdæ[w æ[lstsdz Çts dæ Ódj dæ[lststæ, fnJ tæ tsj Çlsæ[tæsæÓdæž j, æ[L æ tsstsæ dj dæž j æ[/æ[dæ[
tJ tj H dæ dæ uj dæž j H dz æ[fnJ tsdz L tsæÓdæ[w æ ł lsæ[Ó fnjstæÓdæÓ.

Γ j ? fnjsæ[j æÓtæÓdbæ[æ[dæ uæ[dæj lsfnw fnjs H dz tJ tsÇlzJ Ç[æ[dJsdæ[lststæÓ. *µ ls j uj dæ[j tJ tsfnjj H lz h æ[Ó ls tj Ó dj ls æ fnjdz uÓj tsB dæ Ódz> j dæ[w H j w j Çlstsæ, tJ tsH tJ ÓH Ó h Ó tJ tsH lzfnjdzsæ[w ÓtæÓdbæ[æ[, æÓh dJsdæ[lststæ B lz H j ls*
tsB dj dj dæ dæ dJsdæ[lststæ fnjlsÇ[æ[dJ[> j æ[dæ[lzdz uh j dæž dJ[Ó tæÓÇlsj tæ[fnjsæ[Ç dJ[.

∫ tsdæ[lststæ, tJ tj H tsfnjsÓæ dj dæž ? æ L Ódj dz tsfnjsÓj lsfnw æÓh æ[dJ Çtsdj Ódæ[w Philips L Ó æ[tæÓj ls dj æ[fnJ tæÓæ dž ?/
æ[fnÓtsH dž ? dJsdæ[lststæ. H tæsÇ H j ? fnjsæ[w ÓtæÓdbæ[æ[dæ dJsdæ[lststæ tJ tj H tsfnjsÓæ dj dæž ? æ L Ódj dz tsfnjsÓj lsfnw
tæÓæ dž dJ fnjæ tsÇlz H j ? fnjsæ[w ÓtæÓdbæ[æ[dæ æ[fnÓtsH dž ? dJsdæ[lststæ 36 dj jfnw uj æ, dæ uæ[dæw fnjs H dz tJ tsÇlzJ Ç[æ[
æ[fnÓtsH dbæ æ[dJsdæ[lststæÓ.

Y lstsæ[fnÇdz uj dbæ?

µ Ótæ Ódbæ[w Philips F1rst Choice tJ tæ[æ[dj dz j lsfnw tJ tæ[lzfnjdbsæ[æ[fnjsæ dz H j dæ[w uj dj ? æ[fnJ tsdz L tsæÓdæ[w
æ[L H j dæ[w, æ[fnJ tsdz L tsæÓdæ[w æ fnjstslsæ j lsfnjsæ[æ[fn æ[dæ dbæ[lstdz Çuæ[w dJ[tJ ts Çfnj dz Ó ls Ó uæ[æ[æ[tJ tæ[dæ dz[uæ[æ[
tJ tsH dz[dæ dbæ Ç fnjuj lsÓæ[dz[uj Ó, æ Çtslststæ Ó lz Ç L Ódz H Ó ls Ó tJ tsÇlzJ Ç[æ[, tJ tæ tsH Ó j u, dJ tsH j dz æ[dbæ dj tæ
æ[L H j dæ[w.

µ Ótæ Ódbæ[w Philips F1rst Choice dJ tsj lsdj tæÓfnJ tæ tsfnjstæÓdw lsw fnjw dæ fnjdj H lz h æ[j fnjdzuÓæ[:

- Γ tsÇlzdj dbæ Ç Ó Ç[æ[dJ dz[B ts tsB tæ L tsdJ æ[L dj dj dz æ[dz[dj tæ L B tstæuæ[ær .
- ∫ tsH j dz æ[dz[dbæ dj tæ æ[L H j dæ[w æ[L dj dj dz, lzH Ódj dz, fnjsj tæ æ[dz[dj tæ L B tstæuæ[ær .
- [j dJ tsdbæ, dJ tsH æ[w æ[Ç Ó uæ[w æ[dz[æ[L dj dj dæ[j æ[L H j dæ[w tJ tæ tsæ[L æ j H j dz dj lzJ tsdzdbæ dJ tsuj dæž dJ[æ[lstsfnj tæ æ[fnjdz dJ[tstæÓdæ[L Ó uæ[w dJ[æ[dz[dz[uÓ dJ[.
- ł tsæ tj > H j dæ[j æ tsL dæ[Çdbæ tJ ts tJ tæ[uæ[dj Ó æÓtæ[æ[, æ Çdz uÓw, dbæ dj tstæÓdæ[uæ[æÓwfnj , dJ tsdzdæ[j ?,
æ tsH ts? æ[dz[tsæ dj dJ dj tJ tæÓæ[dz dz dJ æ[fnJ tsdz L tsæÓdæ[j dJ æ[dz[dj B tj > dbæfnjsh .
- ł tæsB dj dJ tJ tæ[j dJ Ó tsB lzfnjdbsæ dj dz Ç Ó uj fnjsæ tsdJ fnj æ[dbæÓdæÓ æ[dz[æ dj h dæ[dJ[Ç B j dz dz dJ[æ[dz[

Ɔdbsj dbdz dɔ[fnɟ[fnɟsj dɔ Ɔdɔ[.

- r j w j ʢls ə tsL dbʢ[ʢdbr[tɟ ts tɟ tɑ[ʊ[dbj dbɟ tɟ tɑƆə[dz dbs? ɻ ʢfnɟ dbzƆls Ɔʊ[d[d[dbr[d[fnɟ tsdz L tsə Ɔdbʢ[w dɔ tsdbʢ[lststɑƆ.
- l j tsB ˝ tsH d[dɔ tsd[L dɔj dbɟ dbʢ[j d[dbr[tɟ j tɑj H j dbƐƆd[L H j dbr[w ə fnɟstslsə j lsfnɟsə d[d[fnɟ dɔj fnɟsdz dɔ[d[dbr[tɑj d[tsdbƐdz dz dɔ[lsj ˝ dbʢ[ʊj fnʢ[d[dɔ[fnɟsƆdbɟƆtdsƆdɔ[, tɟ tɑ[dɔj dbz B ʰ d[dɔ[fnɟ ə fnɟstɑƆdbƐ˝, H dbz ʢtslststɑ ˝ dɔ tsdbʢ[lststɑ fnɟ j ʊ[d[Ɔdz dbs dɔj fnɟ tɑtsj ʢlsd[tɑtsə Ɔdz dɔj tɟ tɑtsd[L ə j H j dz dɔj ts H tsB tɑj dbƐ[/d[dbr[dɔj tɟ tɑj H dbƐƆ dbƐʊj dz ɻ ts ɻstsdɔz ə fnj dH Ɔ tɟ tɑtsə j tɑw ? lsj , dɔ ts ɻ dbs dbr[d[fnɟ tsdz L tsə Ɔls dɔ tsdbʢ[lststɑ ə ʢƆɻ H ts? ʢtsdbƐtɑj lsdbs? fnɟstɑƆdbɟ.
- ʢ B tɑƆlsd[lsj ə dbʢ[dɔ Ɔdbʢ[j , ʊ[sts dbƐ d[L H j dbr[w, dbɟ fnɟ tɑtsj ʢlsd[tɑtsə Ɔdbʢdz j , dbɟ tɟ tɑtsd[L ə j H j dbʢdz j , dbɟ ts H tsB tɑj dbʢdz j d[/d[dbr[dbɟ tɟ tɑj H dbƐƆ dbƐʊj dbʢdz j H dbw d[fnɟ tsdz L tsə Ɔdbʢ[w ə fnɟstɑƆdbƐ˝ Philips F1rst Choice, dƆtɑƆdbsd[w Philips F1rst Choice dbɟ tɑƆfnɟ tɑtsfnɟstɑƆdbw j lsfnw. l ɻ lsd[˝ fnɟdbzʊƆw˝ tɟ tɑd[dɔj dbwB lsfnw lzfnɟdbsə d[w ə fnj dɔ[tɑdbs? dƆtɑƆdbsd[ʢtsdɔ[ɟ Ɔdbʢ[d[Philips.

ɻ tɑtsfnɟstsh j dbƐdbʢ[lsj

l fnɟdbzʊƆj ʢƆʢd[˝-dbr[B ts tɟ tɑtsB dɔj dɔ fnɟsə j lszj dɔ l Ɔdɔ ə dbʢ[dɔƆlsj dz dbs tɟ tɑtsʊ[lsƆls d[dbfnɟstdzʢʊ[dB tɟ ts ɻ ʢfnɟ dbzƆls Ɔʊ[d[d[dbr[tɟ tsfnj lsd[ls ə j B-frƆ? ls www.philips.com/support H dbw tɟ tsdbzʊj dbʢ[w H tsɟ tsdbʢ[lsj dz dbs? tɟ ts H H j tɑ ʢd[.

ɻ tɑtsfnɟstsɟ tsL ə tsdbʢ[lsj

r dbw lstsdts ʊ[stsB r d[L B j ɻ Ɔls dɔj ɻ j dbƐls j dz dbz ˝ dbɟ lzH tsB fnɟsə, fnɟsə j lszj dɔ l Ɔdɔ tɟ j tɑj H tsB tɑƆh j dbʢ[j dɔ ə "fnɟ tɑƆə tsʊ[dbz ? fnɟstsdz ʢtsdɔ[ɟ Ɔdbʢ[d[Philips ə dbʢ[dɔƆlsj dz dbs tɟ tɑtsʊ[lsƆls d[dbfnɟstdzʢʊ[dB tɟ ts ɻ ʢfnɟ dbzƆls Ɔʊ[d[d[dbr[tɟ tsfnj lsd[ls ə j B-frƆ? ls www.philips.com/support.

r dbw lstsdts ʊ[stsB r B r fnɟstdts tɑƆ tɑj h d[ls tɟ tɑtsB dɔj dɔz, tɟ j tɑj H tsB tɑƆh j dbʢ[j dɔʢ "fnɟ tɑƆə tsʊ[dbsdɔz fnɟstsdz" ʢtsdɔ[ɟ Ɔdbʢ[d[Philips tɟ tsH dtslstsə ɻ lsj fnɟdɔj H lzB ʰ d[j fnɟ j H j dbʢ[w:

- l tsdɔj tɑƆ lsd[tɟ Ɔ Philips
- H j tɑd[? dbz ? dbsdɔj tɑƆ Philips
- r Ɔls Ɔ tɟ ts ʢlzɟ ʢd[(dɔ ɻ j ls tɟ tslstɑj B tsə Ɔls fnw ʢtsɟ d[w tɟ dƐƆls j ɻ dbz ˝ H ts ʢlzdɔj dbsts ə)
- H tɑj H Ɔ ʢtsdɔɟ ɻ B lsj tɑƆ, tɟ tɑtsʊj fnɟfnɟstɑƆ:
  - 286/386/486/Pentium Pro/ʢ tɟ j tɑƆlsd[ə dbƐw tɟ Ɔdɔw ls
  - ʢ tɟ j tɑƆʊ[d[tsdbƐw fnɟ[fnɟsj dɔ Ɔ (Windows, DOS, OS/2, Apple Macintosh)
  - ʌ Ɔ ʢfnɟ/ʢ ts H j dɔ R dbsj tɑdɔj ls B tɑtslzʊj tɑ?
- r tɑdzɑd[j lzfnɟsƆdbsə dɔj dbʢdz j ʢƆtɑls

l Ɔdbr[ʊ[j fnɟdɔj H lzB ʰ d[˝ fnɟ j H j dbʢ[? ls ʢƆɻ j tɟ tsdɔɟs ɻ j ls lzfnɟ ʢtstɑ[ls tɟ tɑtsʊj fnɟfnɟ

- ɻ ts H ls ə j tɑ ɻ H j dbʢ[j tɟ ts ʢlzɟ ʢd[, ə ʢtslststɑtsdɔɟ lzʢƆL Ɔdbz : H Ɔls Ɔ tɟ ts ʢlzɟ ʢd[, tɟ tɑtsH Ɔə j ʊ, dɔ ts H j dbz d[fnj tɑd[? dbz ? dbsdɔj tɑƆ d[L H j dbr[w.
- ɻ tsdbz ? Ɔ H tɑj fnɟ tɟ ts ʢtslststɑtsdɔz dɔj tsB ˝ tsH d[dɔ ts L Ɔ B tɑƆls dɔj d[fnɟ tɑƆə dbz ? dɔ ts dbʢ[lststɑ, d[dbƐ ʢtslststɑ ? dɔj tsB ˝ tsH d[dɔ ts tɟ ts fnɟsƆə d[ls dbs ə r ?.

"H tɟ tɑƆə tsʊ[dbz j fnɟstsdz " tɟ ts ʢlzɟ ʢƆlsj dɔj ? tɟ tɑtsH lzʢʊ[d[ʢtsdɔ[ɟ Ɔdbʢ[d[Philips tɑƆfnɟ tsdbs ɻ j dbz tɟ ts ə fnj dɔz dɔ[tɑdz z j dbƐdbʢ[lsj fnɟfnɟ dbƐlz H dbw H tsfnɟ sz ɟ Ɔ ʢ ʢtsdbs Ɔ ʢlsdbs? d[dbw tstɑdɔ Ɔʊ[d[F1rst Choice.

ʢ dbƐdɔ ls Ɔ ʢ ɻ j dɔ ɻ dbs tsB tɑƆls d[fnɟw ʊj tɑj L:

l j B-frƆ? ls *http://www.philips.com/support*

ętsdłsOCłsdłs? qdł tstadłOuqdq F1rst Choice

ułstaOdłł	ątsdłjtcłsjdłjł tsdłł	ćOtaqł
Austria	0820 901115	ú 0.20
Belgium	070 253 010	ú 0.17
Denmark	3525 8761	ćOtaqł dłjfrłsdłł ń ęr ĺtsętsę
Finland	09 2290 1908	ćOtaqł dłjfrłsdłł ń ęr ĺtsętsę
France	08 9165 0006	ú 0.23
Germany	0180 5 007 532	ú 0.12
Greece	00800 3122 1223	ćOtaqł dłjfrłsdłł ń ęr ĺtsętsę
Ireland	01 601 1161	ćOtaqł dłjfrłsdłł ń ęr ĺtsętsę
Italy	199 404 042	ú 0.25
Luxembourg	26 84 30 00	ćOtaqł dłjfrłsdłł ń ęr ĺtsętsę
The Netherlands	0900 0400 063	ú 0.20
Norway	2270 8250	ćOtaqł dłjfrłsdłł ń ęr ĺtsętsę
Portugal	2 1359 1440	ćOtaqł dłjfrłsdłł ń ęr ĺtsętsę
Spain	902 888 785	ú 0.15
Sweden	08 632 0016	ćOtaqł dłjfrłsdłł ń ęr ĺtsętsę
Switzerland	02 2310 2116	ćOtaqł dłjfrłsdłł ń ęr ĺtsętsę
United Kingdom	0207 949 0069	ćOtaqł dłjfrłsdłł ń ęr ĺtsętsę

ÇÃ¸ÃÃ¸Ã¸Ã¸Ã

ÇÇ,ÌÇ,Ç,Ç,Ç

Consumer Information Centers

Antilles • Argentina • Astline • Australia • Bangladesh • Bosnia & Herzegovina• Brasil • Canada • Chile • China • Colombia • Belarus • Bulgaria • Croatia • Czech Republic • Estonia • Dubai • Hong Kong • Hungary • India • Indonesia • Korea • Latvia • Lithuania • Macedonia • Malaysia • Mexico • Morocco • New Zealand • Pakistan • Paraguay • Peru • Philippines • Poland • Romania • Russia • Serbia & Montenegro • Singapore • Slovakia • Slovenia • South Africa • Taiwan • Thailand • Turkey • Ukraine • Uruguay • Venezuela

Eastern Europe

BELARUS

Technical Center of JV IBA
M. Bogdanovich str. 155
BY - 220040 Minsk
Tel: +375 17 217 33 86

ASTLINE

Petrus Brovky str. 17-101
BY - 220072 Minsk
Tel: + 375 17 284 02 03

BULGARIA

LAN Service
140, Mimi Balkanska Str.
Office center Translog
1540 Sofia, Bulgaria
Tel: +359 2 960 2360
Email: office@lan-service.bg
www.lan-service.bg

CZECH REPUBLIC

Xpectrum
Lužn§ 591/4
CZ - 160 00 Praha 6 Tel: 800 100 697
Email:info@xpectrum.cz
www.xpectrum.cz

BOSNIA & HERZEGOVINA

Megatrend d.o.o.
Bosnia&Herzegovina
Džemala Bijedica 2/II
BA - 71000 Sarajevo
Tel: +387 33 613 166
Email: info@megatrend.ba
www.megatrend.ba

CROATIA

Renoprom d.o.o.
Mlinska 5, Strmec
HR - 41430 Samobor
Tel: +385 1 333 0974

ESTONIA

FUJITSU SERVICES OU
Akadeemia tee 21G
EE-12618 Tallinn
Tel: +372 6519900
www.ee.invia.fujitsu.com

HUNGARY

Profi Service
Hungary
K¿lso-V§ci ¼t 123
HU - 1044 Budapest
Tel: +36 1 814
8080 Email: ugyfelszolgalat@psc.hu
www.psc.hu

LATVIA

ServiceNet LV
Jelgavas iela 36
LV - 1055 Riga,
Tel: +371 7460399
Email: serviss@servicenet.lv

MACEDONIA

AMC - Computers
kej Dimitar Vlahov bb
MK - 1000 Skopje
Tel: +389 2 3125097
www.amc.com.mk

LITHUANIA

ServiceNet LT
Gaiziunu G. 3
LT - 3009 KAUNAS
Tel: +370 7400088
Email: servisas@servicenet.lt
www.servicenet.lt

ROMANIA

Blue Ridge Int'l Computers SRL
115, Mihai Eminescu St., Sector 2
RO - 020074 Bucharest
Tel: +40 21 2101969
Email: tehnic@blueridge.ro
www.blueridge.ro

SERBIA & MONTENEGRO

Tehnicom Service d.o.o.
Bulevar Vojvode Misica 37B
YU - 11000 Belgrade
Tel: +381 11 30 60 881
Email: tehnicom-service@tehnicom.com
www.tehnicom-service.com

SLOVAKIA

Datalan Servisne Stredisko
Puchovska 8
SK - 831 06 Bratislava
Tel: +421 2 49207155
Email: servis@datalan.sk

SLOVENIA

PC HAND
Brezovce 10
SI - 1236 Trzin
Tel: +386 1 530 08 24
Email: servis@pchand.si

POLAND

Zolter
ul.Zytnia 1
PL - 05-500 Piaseczno
Tel: +48 22 7501766
Email: servmonitor@zolter.com.pl
www.zolter.com.pl

RUSSIA

Tel: +7 095 961-1111
Tel: 8-800-200-0880
Website: www.philips.ru

TURKEY
T¿rk Philips Ticaret
A.S.
Yukari Dudullu Org.San.Bolgesi
2.Cadde No:22
34776-Umraniye/Istanbul
Tel:
(0800)-261 33 02

UKRAINE

Comel
Shevchenko street 32
UA - 49030 Dnepropetrovsk
Tel: +380 562320045
www.csp-comel.com

Latin America

ANTILLES
Philips Antillana N.V.
Kaminda A.J.E. Kusters 4
Zeelandia, P.O. box 3523-3051
Willemstad, Curacao
Phone: (09)-4612799
Fax : (09)-4612772

ARGENTINA
Philips Antillana N.V.
Vedia 3892 Capital Federal
CP:
1430 Buenos Aires Phone/Fax:
(011)-4544 2047

BRASIL
Philips da Amaz¹ nia Ind.
Elet. Ltda. Rua Verbo
Divino, 1400-S«o Paulo-SP CEP-04719-002 Phones: 11 21210203 -S«o
Paulo & 0800-701-0203-Other Regions without S«o Paulo City

CHILE
Philips Chilena S.A.
Avenida Santa Maria 0760
P.O. box 2687Santiago de Chile
Phone: (02)-730 2000
Fax : (02)-777 6730

COLOMBIA
Industrias Philips de Colombia
S.A.-Division de Servicio
CARRERA 15 Nr. 104-33 Bogota,
Colombia Phone:(01)-8000 111001 (toll free) Fax
: (01)-619-4300/619-4104

MEXICO
Consumer Information Centre
Norte 45 No.669 Col.
Industrial Vallejo C.P.02300,
-Mexico, D.F. Phone:
(05)-3687788 / 9180050462 Fax
: (05)-7284272

PARAGUAY
Av. Rca. Argentina 1780 c/Alfredo
Seiferheld
P.O. Box 605
Phone: (595 21) 664 333
Fax: (595 21) 664 336
Customer
Desk:
Phone: 009 800 54 1 0004

PERU
Philips Peruana S.A.
Customer Desk Comandante
Espinar 719 Casilla
1841 Limab18
Phone: (01)-2136200
Fax : (01)-2136276

URUGUAY
Rambla O'Higgins 5303 Montevideo
Uruguay
Phone:
(598) 619 66 66
Fax: (598) 619 77 77
Customer Desk:
Phone: 0004054176

VENEZUELA
Industrias Venezolanas Philips
S.A. Apartado Postal
1167 Caracas 1010-A
Phone: (02) 2377575
Fax : (02) 2376420

Canada

CANADA

Philips Electronics Ltd.
281 Hillmount Road Markham,
Ontario L6C 2S3 Phone: (800) 479-6696

Pacific

AUSTRALIA
Philips Consumer Electronics
Consumer Care Center
Level 1, 65 Epping Rd
North Ryde NSW 2113
Phone: 1300 363 391
Fax
: +61 2 9947 0063

NEW ZEALAND Philips New Zealand Ltd. Consumer Help Desk 2 Wagener Place, Mt.Albert P.O. box 1041 Auckland
Phone: 0800 477 999 (toll free)
Fax : 0800 288 588

Asia

BANGLADESH
Philips Service Centre
100 Kazi Nazrul Islam
Avenue Kawran Bazar C/A
Dhaka-1215 Phone:
(02)-812909 Fax : (02)-813062

CHINA
SHANGHAI
Rm 1007, Hongyun
Building, No. 501 Wuning road,
200063 Shanghai P.R. China
Phone: 4008 800
008
Fax: 21-52710058

HONG
KONG Philips Electronics
Hong Kong Limited Consumer
Service Unit A, 10/F.
Park Sun Building
103-107 Wo Yi Hop Road
Kwai Chung, N.T.
Hong Kong
Phone:
(852)26199663
Fax: (852)24815847

INDIA
Phone: 91-20-712 2048 ext:
2765 Fax: 91-20-712 1558 BOMBAY
Philips India Customer
Relation Centre Bandbox
House 254-D Dr. A Besant
Road, Worli Bombay 400
025 CALCUTTA
Customer Relation Centre
7 justice Chandra Madhab Road
Calcutta 700 020 MADRAS
Customer Relation Centre
3, Haddows Road Madras
600 006 NEW DELHI
Customer Relation Centre
68, Shivaji Marg New
Dehli 110 015

INDONESIA
Philips Group of Companies
in Indonesia Consumer
Information Centre Jl.Buncit
Raya Kav. 99-100 12510
Jakarta Phone: (021)-7940040
ext: 2100 Fax : (021)-794 7511 / 794 7539

KOREA
Philips Consumer Service Jeong
An Bldg. 112-2 Banpo-dong, Seocho-Ku Seoul, Korea Customer Careline: 080-600-6600
Phone: (02) 709-1200 Fax
: (02) 595-9688

MALAYSIA
After Market Solutions Sdn
Bhd,
Philips Authorised Service Center,
Lot 6, Jalan 225, Section 51A,
46100
Petaling Jaya,
Selangor Darul Ehsan,
Malaysia.
Phone: (603)-7954 9691/7956
3695
Fax: (603)-7954 8504
Customer Careline: 1800-880-180

PAKISTAN
Philips Consumer Service
Mubarak
manzil,
39, Garden Road, Saddar,
Karachi-74400
Tel: (9221) 2737411-16
Fax:
(9221) 2721167
E-mail: care@philips.com
Website: www.philips.com.pk

PHILIPPINES
PHILIPS ELECTRONICS & LIGHTING,
INC.
Consumer Electronics
48F PBCOM tower
6795 Ayala Avenue cor VA Rufino
St.
Salcedo Village
1227 Makati City, PHILS
Phone: (02)-888 0572, Domestic
Toll Free: 1-800-10-PHILIPS or 1-800-10-744 5477
Fax: (02)-888 0571

SINGAPORE
Accord Customer Care Solutions
Ltd
Authorized Philips Service Center
Consumer Service
620A Lorong 1
Toa Rayoh
Singapore 319762
Tel: +65 6882 3999
Fax: +65 6250 8037

TAIWAN
Philips Taiwan Ltd.
Consumer Information Centre
13F, No. 3-1 Yuan Qu St., Nan
Gang Dist.,
Taipei 115, Taiwan
Phone: 0800-231-099 Fax : (02)-3789-2641

THAILAND
Philips Electronics (Thailand)
Ltd. 26-28th floor,
Thai Summit Tower
1768 New Petchburi Road
Khwaeng Bangkapi, Khet Huaykhwang
Bangkok10320
Thailand
Tel: (66)2-6528652
E-mail: cic Thai@philips.com

Africa

MOROCCO
Philips Electronique Maroc
304,BD Mohamed V Casablanca
Phone: (02)-302992 Fax
: (02)-303446

SOUTH
AFRICA PHILIPS SA (PTY)
LTD
Customer Care Center
195 Main Road
Martindale, Johannesburg
P.O.
box 58088
Newville 2114
Telephone: +27 (0) 11 471 5194
Fax: +27 (0) 11
471 5123
E-mail: customercare.za@philips.com

Middle East

DUBAI
Philips Middle East B.V.
Consumer Information Centre
P.O.Box 7785 DUBAI
Phone: (04)-335 3666
Fax : (04)-335 3999

[illegible]

[illegible]

[illegible] Philips, [illegible]

[illegible] Philips [illegible] 12 [illegible] Philips [illegible] Philips [illegible]

[illegible] Philips [illegible]

[illegible] Philips [illegible]

[illegible] Philips [illegible]

[illegible] Philips [illegible]

[illegible] Philips [illegible]

[illegible] Philips [illegible]

[illegible]

http://www.philips.com

ϕ ϒ ˜ˢ˘ ˜ ˜ ˜

ﾟ ﾟ ﾟ

ط ٬ ٬ ٬

ตัวอย่างคู่มือผู้ใช้ ... ข้อมูลที่คุณต้องการค้นหาอยู่ที่นี่

ค้นหาคู่มือผู้ใช้ _____

ข้อมูลที่ต้องการค้นหาคืออะไร _____

ถ้าคุณไม่ทราบว่าจะเริ่มต้นค้นหาข้อมูลที่ต้องการที่ไหน ให้ลองอ่านรายการคำถามที่พบบ่อยที่ท้ายคู่มือเล่มนี้ ซึ่งอาจช่วยให้คุณค้นพบคำตอบที่ต้องการได้ทันที.

ขอแสดงความยินดีกับคุณที่ซื้อผลิตภัณฑ์ Philips, ซึ่งออกแบบมาเพื่อให้ใช้งานได้อย่างมีประสิทธิภาพและมีความน่าเชื่อถือสูงเป็นเวลานาน. ขอให้คุณมีความสุขกับผลิตภัณฑ์ใหม่ของคุณ.

- ข้อมูลเกี่ยวกับผลิตภัณฑ์ Philips
- ข้อมูลเกี่ยวกับการติดตั้ง Philips
- คำแนะนำเกี่ยวกับการใช้งาน (ดูส่วนเนื้อหาด้านล่าง)
- ข้อมูลเพิ่มเติม, เช่น ข้อมูลจำเพาะ ฯลฯ:
  - 286/386/486/Pentium Pro/เพนทิยมโปร
  - ใช้งานร่วมกับระบบปฏิบัติการ (Windows, DOS, OS/2, Apple Macintosh)
  - การตั้งค่าฮาร์ดดิสก์ ฯลฯ
- คำแนะนำ
  ข้อมูลเกี่ยวกับการใช้งานอุปกรณ์ต่อพ่วงที่ใช้ได้กับผลิตภัณฑ์ Philips
- เมื่อคุณติดตั้งผลิตภัณฑ์ของคุณ, ตรวจสอบให้แน่ใจว่าคุณได้ทำตามขั้นตอนทั้งหมดอย่างถูกต้อง.
- ข้อมูลเพิ่มเติม
  ข้อมูลเกี่ยวกับการใช้งานผลิตภัณฑ์ Philips

ชื่อรุ่นและหมายเลขผลิตภัณฑ์

Philips ของคุณได้ถูกออกแบบมาเพื่อให้ใช้งานได้ตามมาตรฐานสูงสุด, และได้ผ่านการทดสอบเพื่อความน่าเชื่อถือมาแล้ว. ข้อมูลต่อไปนี้ใช้สำหรับผลิตภัณฑ์ที่ใช้งานในเวลาปกติ 8:00 ถึง 21:00 ในวันธรรมดา และ 10:00 ถึง 17:00 ในวันอาทิตย์ (ยกเว้นวันหยุดนักขัตฤกษ์) ในช่วงเวลาดังกล่าว ข้อมูลเพิ่มเติมเกี่ยวกับชื่อรุ่นและหมายเลขผลิตภัณฑ์ของคุณ.

ถ้าคุณมีปัญหาในการใช้งานผลิตภัณฑ์ Philips ของคุณ ให้ติดต่อตัวแทนจำหน่ายของคุณ หรือติดต่อ Philips ที่อยู่ด้านล่างนี้ หรือเยี่ยมชมเว็บไซต์ Philips

ที่อยู่ด้านล่าง *http://www.philips.com*

It Takes Only A Moment To

PROTECT YOUR INVESTMENT.

Congratulations on investing in a Philips product. It's an important and intelligent decision that's sure to reward you for many years to come. To ensure you'll get all of the privileges and protection that come with your purchase, please complete your Warranty Registration Card within the next ten days.

SIMPLY MAIL THE CARD BELOW TO RECEIVE ALL OF THESE BENEFITS TO WHICH YOU'RE ENTITLED.

WARRANTY VERIFICATION

Your prompt registration verifies your right to protection under the terms and conditions of your warranty.

OWNER CONFIRMATION

Your completed Warranty Registration Card serves as confirmation of ownership in the event of product loss or theft.

MODEL REGISTRATION

Returning the attached card right away guarantees you'll receive all information and special offers for which your purchase makes you eligible. So please act today!

www.philipsusa.com

DETACH AND MAIL PORTION BELOW.

WARRANTY REGISTRATION CARD

MODEL NUMBER | SERIAL NUMBER

Registering your product is an essential step to ensure that you receive all of the benefits you are entitled to as a Philips customer. So complete the information below in ink, and drop this card in the nearest mailbox.

IMPORTANT - RETURN WITHIN TEN DAYS

Date of Purchase: Month / Day / Year

Your Name: First / Initial / Last

Address: Street / Apt. #

City / State / ZIP Code

Retail Price Paid $ _____ .00
(Excluding sales tax, maintenance agreement, delivery, installation, and trade-in allowance.)

Your Phone Number (optional): Area Code / Phone Number

E-mail Address (optional)

PHILIPS

Mail This Card Today To Get The Most From Your Purchase!

❑ No, I do not want to receive personalized offers about Philips products or other information from Philips in the future.

3135 015 07803 rev. 7/02

TIME-DATED
MATERIAL
Please Open
Promptly!

PHILIPS
PO BOX 1533
DEPOSIT NY 13754-1533

PLEASE
APPLY FIRST
CLASS
STAMP

IMPORTANT

PHILIPS Warranty Registration Card

RETURN THE ATTACHED CARD WITHIN TEN DAYS TO ENSURE YOUR:

- ✓ Warranty Verification
- ✓ Owner Confirmation
- ✓ Model Registration

See Inside For Valuable Benefits!

[illegible]

A B C D E F G H I J K L M N O P Q R S T U V W X Y Z

A

Active matrix ([illegible])

[illegible] TFT ([illegible]).

Amorphous silicon (a-Si) ([illegible])

[illegible] (TFT) [illegible].

Aspect ratio ([illegible])

[illegible] 4:3. [illegible] 16:9 [illegible] 16:10.

[illegible]

B

Backlight ([illegible])

[illegible] TFT [illegible].

Brightness ([illegible])

[illegible]

ﻭﺍﺣﺪﻫﺎﻱ ﻫﺎﻱ ﺑﺎﺯﺗﺎﺑﻲ، ﻫﻤﺎﻧﻨﺪ ﻣﺎﻧﻴﺘﻮﺭﻫﺎ ﻭ ﺩﺳﺘﮕﺎﻫﻬﺎﻱ ﻣﺨﺎﺑﺮﺍﺗﻲ ﻣﻲﺑﺎﺷﺪ. ﺑﺮﺍﻱ ﺗﺒﺪﻳﻞ ﺳﻴﮕﻨﺎﻝ ﺭﺍﺩﻳﻮﻳﻲ ﺑﻪ ﺳﻴﮕﻨﺎﻝ ﻗﺎﺑﻞ ﻧﻤﺎﻳﺶ ﺑﺮ ﺭﻭﻱ ﻣﺎﻧﻴﺘﻮﺭ ﻳﺎ ﺩﺳﺘﮕﺎﻫﻬﺎﻱ ﻣﺨﺎﺑﺮﺍﺗﻲ ﻣﻲﺑﺎﺷﺪ.

ﻫﻴﺮﻭﺷﻴﻤﺎ ﻳﻮﺷﻴﺘﻮ ﻫﻴﺮﻭﺳﻴﻤﺎ ﻳﻮﺷﻴﺘﻮ

C

CCFL (ﻻﻣپ ﻓﻠﻮﺭﺳﺎﻧﺲ ﺳﺮﺩ ﻛﺎﺗﺪ)

ﻳﻚ ﻧﻮﻉ ﻻﻣپ ﻓﻠﻮﺭﺳﺎﻧﺲ ﺳﺮﺩ ﻛﺎﺗﺪ ﻣﻲﺑﺎﺷﺪ ﻛﻪ ﺑﺮﺍﻱ ﺭﻭﺷﻨﺎﻳﻲ ﻣﺎﻧﻴﺘﻮﺭﻫﺎﻱ ﺑﺰﺭﮒ ﻣﻮﺭﺩ ﺍﺳﺘﻔﺎﺩﻩ ﻗﺮﺍﺭ ﻣﻲﮔﻴﺮﺩ. ﻳﻚ ﻻﻣپ ﻓﻠﻮﺭﺳﺎﻧﺲ ﺳﺮﺩ ﻛﺎﺗﺪ ﺑﺎ ﺭﻭﺷﻨﺎﻳﻲ ﻣﺎﻧﻴﺘﻮﺭﻫﺎﻱ 2 ﻣﺘﺮﻱ ﻭ ﻗﻄﺮﻫﺎﻱ ﻛﻮﭼﻜﺘﺮ.

Chromaticity (ﻛﻴﻔﻴﺖ ﺭﻧﮓ)

ﻳﻚ ﺷﺎﺧﺺ ﻛﻴﻔﻲ ﺑﺮﺍﻱ ﺗﻌﻴﻴﻦ ﻛﻴﻔﻴﺖ ﻧﻮﺭ ﻣﻲﺑﺎﺷﺪ. ﺷﺎﺧﺺ ﻛﻴﻔﻴﺖ ﺷﺎﻣﻞ ﻫﺮ ﺩﻭ ﻣﺸﺨﺼﻪ ﻛﻴﻔﻴﺖ ﻭ ﺭﻧﮓ ﻧﻮﺭ ﻣﻲﺑﺎﺷﺪ. ﻛﻴﻔﻴﺖ ﺭﻧﮓ ﻳﻚ ﻣﻌﻴﺎﺭ ﺑﺮﺍﻱ ﺳﻨﺠﺶ ﻛﻴﻔﻴﺖ ﻧﻮﺭ ﻣﻲﺑﺎﺷﺪ.

CIE (Commission International de l'Eclairage)

ﻛﻤﻴﺴﻴﻮﻥ ﺑﻴﻦﺍﻟﻤﻠﻠﻲ ﺩﻱ ﻻﻳﺖﺍﺳﻴﻮﻥ ﻳﻚ ﺳﺎﺯﻣﺎﻥ ﺑﻴﻦﺍﻟﻤﻠﻠﻲ ﺑﺮﺍﻱ ﺍﺳﺘﺎﻧﺪﺍﺭﺩﻫﺎﻱ ﻧﻮﺭ ﻣﻲﺑﺎﺷﺪ.

Color temperature (ﺩﻣﺎﻱ ﺭﻧﮓ ﻧﻮﺭ)

ﺩﻣﺎﻱ ﺭﻧﮓ ﻧﻮﺭ ﻳﻚ ﻛﻤﻴﺖ ﻣﻌﻴﻦ ﺑﺮﺍﻱ ﺗﻌﻴﻴﻦ ﻛﻴﻔﻴﺖ ﻧﻮﺭ ﻣﻲﺑﺎﺷﺪ. ﻛﻴﻔﻴﺖ ﻧﻮﺭ ﺑﺎ ﺩﻣﺎﻱ ﺭﻧﮓ ﻧﻮﺭ ﺑﺮﺍﻱ ﻣﺎﻧﻴﺘﻮﺭﻫﺎﻱ ﻛﺎﻣپﻳﻮﺗﺮﻱ ﻣﻌﻤﻮﻟﻲ ﻣﺘﻔﺎﻭﺕ ﺍﺳﺖ. ﻣﺎﻧﻴﺘﻮﺭﻫﺎﻱ (ﻛﺎﻣﭙﻴﻮﺗﺮﻱ) ﻛﻪ ﺑﺮﺍﻱ ﻛﺎﺭﻫﺎﻱ ﺑﺎﺯﺗﺎﺑﻲ ﻣﻲﺳﺎﺯﻧﺪ ﺩﻣﺎﻱ ﺭﻧﮓ ﻧﻮﺭ 2400ﺩﺭﺟﻪ ﻛﻠﻔﻴﻦ ﺩﺍﺭﻧﺪ ﻛﻪ ﺑﺴﻴﺎﺭ ﻗﺮﻣﺰ ﻫﺴﺘﻨﺪ. ﻭﻟﻲ ﺑﺮﺍﻱ ﻣﺎﻧﻴﺘﻮﺭﻫﺎﻱ ﺗﻠﻔﻴﻮﻳﺰﻳﻮﻥ ﺍﺳﺘﺎﻧﺪﺍﺭﺩ ﺩﻣﺎﻱ ﺭﻧﮓ ﻧﻮﺭ 9300ﺩﺭﺟﻪ ﻛﻠﻔﻴﻦ ﻳﺎ 6504ﺩﺭﺟﻪ ﻛﻠﻔﻴﻦ ﺍﺳﺖ. ﺑﺮﺍﻱ ﻣﺎﻧﻴﺘﻮﺭﻫﺎﻱ Philips ﺑﺮﺍﻱ ﺗﻠﻔﻴﻦ ﻫﺎﻱ ﺑﺎﺯﺭﮔﺎﻧﻲ ﻫﺎﻱ ﺑﺎﺯﺭﮔﺎﻧﻲ 9300ﺩﺭﺟﻪ، 6500ﺩﺭﺟﻪ ﺩﺍﺭﻧﺪ.

Contrast (ﻛﻨﺘﺮﺍﺳﺖ ﺭﻧﮓ)

ﺑﻪ ﺗﻔﺎﻭﺕ ﻣﻴﺎﻥ ﺭﻧﮓ ﻫﺎﻱ ﺭﻭﺷﻦ ﻭ ﺗﺎﺭﻳﻚ ﺑﺮﺍﻱ ﻣﺎﻧﻴﺘﻮﺭﻫﺎ ﻭ ﺗﻠﻔﻴﻦ ﻫﺎ ﻛﻨﺘﺮﺍﺳﺖ ﮔﻔﻪ ﻣﻲﺷﻮﺩ.

Contrast ratio (ﻧﺴﺒﺖ ﻛﻨﺘﺮﺍﺳﺖ)

ﻳﻚ ﻣﻌﻴﺎﺭ ﺑﺮﺍﻱ ﺑﻴﺎﻥ ﻣﻴﺰﺍﻥ ﻛﻨﺘﺮﺍﺳﺖ ﻣﻮﺟﻮﺩ ﺑﻴﻦ ﻗﺴﻤﺖ ﻫﺎﻱ ﺭﻭﺷﻦ ﻭ ﺗﺎﺭﻳﻚ ﻳﻚ ﺗﺼﻮﻳﺮ ﻣﻲﺑﺎﺷﺪ.

ﻫﻴﺮﻭﺷﻴﻤﺎ ﻳﻮﺷﻴﺘﻮ ﻫﻴﺮﻭﺳﻴﻤﺎ ﻳﻮﺷﻴﺘﻮ

D

D-SUB

φdz&dzsdzsor ? o=tsHdz&? tcOLj jdz3VGA. J O^ dz3sdz&lsstc tftsfrjsOodzwjlsfrw frn?OBjdzjdz3D-Sub.

Digital Visual Interface (DVI)

Λ dqw tdzsotsΩ odqHjtsqdz&jtcw j?frn

Λ dqw tdzsotsΩ odqHjtsqdz&jtcw j?frn(DVI) tsBjfrnfjjuqfoOjlsor frjs?tsfr?tsdzsfrjsdz&r tfjjtcjHOuqzuqdqw tdzsotsΩ odqHjtsqdz&w tsdz3Ouqdqd dzjLOodqfrnqdz3tsdzslsqftfOHdqfrnfdzjw. J frn&sodz&Ω wlzdz&uqdj? dqdz&jtcw j?frnOwodzwjlsfrw tsBjfrnfjjujdz&jj frjsjHqdzjdz&w dz3jxHlz?tsdz3r lsjtdzsdz3dqHdqfrnfdzjjdz3 ujn=dz&ujfr?dqj n=OtcO?lsjtcqfrjsqdqd dqdz&jtcw j?frnOfrjsodz3jfrjsqdz3 frn=OtcO?lsjtcqfrjsqdqOdz3dqtfjjtcfrjsdz&dzdz n ?tsdz3r lsjtdzso (1 s) ofrnjn lsqftfso (tcBtsuqdj frjsOdz&uqdqd, dz&frjstsdzdz j 1 s, Htsdzsxdz j 1 s dqlstf.), Bdz&dzsHOtcw ujdz3ztsdz&dz3sdzls dqfrnftsdzLtsoOlsr frnw frjsodz3jfrjsdz&s.

Λ dqw tdzsotsΩ odqHjtsqdz&jtcw j?frntsBdz&OHOjlsfrndz3HlzB h dqdz3dqw lzdz&uqdqtsdz&dzdz dz3dqo otsLdz3sxdz&sfrjswdz3dqd:

/, J tsLdz3sxdz&sfrjs tftcqdqtcOBtslsj o uqdqw tdzsotsdz3w tsdzdz3Olsj frjs=tcOdz&lsr HOdz&dz j frndz3sdz3jdz&Odqn= frjsLHOdz&w Htsfrnuqlsr oOdz&w Bj L tcqfrn?Oftftslsjtcqdqd dz&w tsdzdz3Ouqdqd.

0, l j LOodqfrnqdz3sfrjsr tslslsqftfOHdqfrnfdzjw.

1, uj=dz&dzsdqw "o?dz&r uO? dqtcOBtslsO?" (Oolsrsdz3Olsdqujfr?tsj ?tsdz&w dqdztcqdtdzsoOdz&j Oftfdzdz&lsdz n frncjHrfrjso), tcjOdzqLzjdz3Ow tfzlsjdz3tsfjjtcOlsqodz&dzsdz tsftcjHjdzjdz&w tftsH?dz&r ujdz&dz&dzsdz tcOLj jdz3O-EDID dqDDC2B.

2, l tsHHjtcx?Ouqdqw tdzsotsdzsdqOdz&dz&dzsotsdzsdz tcjxqdz3OftfdzqdqfrnftsdzLtsoOdz&dqjHqdz&dzsdz tcOLj jdz3O.

Ezyx l φ]ΩΗ n ∫φΑφ l ?s n φ j l] ∫ l ∫

E

Energy Star Computers Programme

l tdzsc?tcOdz3dz3O^ dz&jtcc?tsfrBjtcjxjdz&w Energy Star

jdz&Odz&s? ujdzr tftdzsdz?tcOdz3dz3 ^ dz&jtcdzsfrBjtcjxjdz&w, frjsLHOdz&dz&s? tftsqdz&uqdqOlsqojj uftdzOodzjdz&w tftsLO^ qlsj tsdz?tcdzxOr h j? frjcjHr ([[φ) Hz φ, wodzwjlsfrw tftsHHjtcx?Oftdzsqdqlosqo?tsHfrjsoOqd tcOfrjftdzsfrjsdz?tcOdz&dz&w dz&Otcr dz&j ^ w w j?lsqodz&dzsdz tftsr dz&jtcdzsftftslsdzjBdz&jdz&r tsw qfrnjdz&dzs?tsdz3r lsjtcdz&dzs tsBtsdzHtsoOdz&w. stsdz3Odz&qd, tcOBtslsOr h qj o tcOdz3O=r lsts? tftdzsdz?tcOdz3dz3 , Htsdzxdz tftcqdzwlsr dz&fnjBw tsBwLOsjdz frjsOftftsqdqLdzslsdzsodz&dz&r tsHdz&dzsdz qdzqdz&jdz&?, frnftsfrjsBdz n tfjjtcjn=tsHqlsr o frjsfrjsdzwdz&j dz&L?tsdzr dz&jtcdzsftftslsdzjBdz&jdz&w (< 30 J ls) tftsqfrnjsjujdz&qdqdzqBtsLOHOdz&dz&s?otcjdz3jdz&

ⓓⓐⓝⓖⓔⓡⓞⓤⓢ ⓐⓝⓓ ⓢⓐⓕⓔ ⓣⓘⓟⓢ ⓕⓞⓡ ⓣⓐⓚⓘⓝⓖ ⓐ ⓑⓡⓔⓐⓚ ⓘⓝ ⓣⓗⓔ ⓦⓘⓝⓓ ⓐⓝⓓ ⓣⓐⓚⓘⓝⓖ ⓐ ⓢⓣⓡⓔⓣⓒⓗ ⓘⓝ ⓣⓗⓔ ⓓⓐⓡⓚ

Ⓔⓥⓔⓝ ⓘⓕ ⓨⓞⓤ ⓐⓡⓔ ⓝⓞⓣ ⓐ ⓒⓐⓡ ⓓⓡⓘⓥⓔⓡ, ⓣⓐⓚⓘⓝⓖ ⓐ ⓑⓡⓔⓐⓚ ⓘⓢ ⓐⓛⓢⓞ ⓐ ⓖⓡⓔⓐⓣ ⓘⓓⓔⓐ ⓘⓕ ⓨⓞⓤ ⓐⓡⓔ ⓘⓝ ⓐ ⓓⓘⓕⓕⓘⓒⓤⓛⓣⓨ ⓢⓘⓣⓤⓐⓣⓘⓞⓝ ⓐⓝⓓ ⓝⓔⓔⓓ ⓣⓞ ⓕⓘⓝⓓ ⓐ ⓢⓐⓕⓔ ⓟⓛⓐⓒⓔ ⓣⓞ ⓟⓐⓡⓚ ⓨⓞⓤⓡ ⓒⓐⓡ.

G

Gamma (ⓖⓐⓜⓜⓐ)

ⓖⓐⓜⓜⓐ ⓘⓢ ⓐ ⓝⓤⓜⓑⓔⓡ ⓤⓢⓔⓓ ⓣⓞ ⓓⓔⓢⓒⓡⓘⓑⓔ ⓗⓞⓦ ⓐ ⓓⓘⓢⓟⓛⓐⓨ ⓘⓢ ⓡⓔⓢⓟⓞⓝⓓⓘⓝⓖ ⓣⓞ ⓛⓘⓖⓗⓣ. ⓖⓐⓜⓜⓐ ⓒⓐⓝ ⓐⓕⓕⓔⓒⓣ ⓣⓗⓔ ⓑⓡⓘⓖⓗⓣⓝⓔⓢⓢ ⓐⓝⓓ ⓒⓞⓝⓣⓡⓐⓢⓣ ⓞⓕ ⓐ ⓓⓘⓢⓟⓛⓐⓨ ⓐⓝⓓ ⓘⓢ ⓐⓛⓢⓞ ⓤⓢⓔⓓ ⓘⓝ ⓒⓞⓜⓑⓘⓝⓐⓣⓘⓞⓝ ⓦⓘⓣⓗ ⓞⓣⓗⓔⓡ ⓒⓞⓛⓞⓡⓢ ⓣⓞ ⓐⓒⓗⓘⓔⓥⓔ ⓐ ⓓⓔⓢⓘⓡⓔⓓ ⓔⓕⓕⓔⓒⓣ. ⓐⓛⓣⓗⓞⓤⓖⓗ ⓣⓗⓔ ⓡⓔⓛⓐⓣⓘⓞⓝⓢⓗⓘⓟ ⓑⓔⓣⓦⓔⓔⓝ ⓖⓐⓜⓜⓐ ⓐⓝⓓ ⓑⓡⓘⓖⓗⓣⓝⓔⓢⓢ ⓘⓢ ⓝⓞⓣ ⓐ ⓛⓘⓝⓔⓐⓡ ⓡⓔⓛⓐⓣⓘⓞⓝⓢⓗⓘⓟ, ⓘⓣ ⓘⓢ ⓒⓞⓜⓜⓞⓝⓛⓨ ⓤⓢⓔⓓ ⓘⓝ ⓒⓞⓜⓟⓤⓣⓔⓓ ⓖⓡⓐⓟⓗⓘⓒⓢ ⓐⓝⓓ ⓘⓜⓐⓖⓔ ⓓⓘⓢⓟⓛⓐⓨ ⓐⓛⓖⓞⓡⓘⓣⓗⓜⓢ.

Grayscale (ⓖⓡⓐⓨⓢⓒⓐⓛⓔ)

ⓖⓡⓐⓨⓢⓒⓐⓛⓔ ⓘⓢ ⓐ ⓣⓨⓟⓔ ⓞⓕ ⓓⓘⓖⓘⓣⓐⓛ ⓘⓜⓐⓖⓔ ⓘⓝ ⓦⓗⓘⓒⓗ ⓐⓛⓛ ⓒⓞⓛⓞⓡⓢ ⓐⓡⓔ ⓢⓗⓐⓓⓔⓓ ⓘⓝ ⓐ ⓢⓒⓐⓛⓔ ⓕⓡⓞⓜ ⓑⓛⓐⓒⓚ ⓣⓞ ⓦⓗⓘⓣⓔ. ⓘⓣ ⓒⓐⓝ ⓐⓛⓢⓞ ⓑⓔ ⓤⓢⓔⓓ ⓣⓞ ⓓⓔⓢⓒⓡⓘⓑⓔ ⓐ ⓢⓘⓝⓖⓛⓔ ⓒⓞⓛⓞⓡ ⓘⓝ ⓐ ⓓⓘⓖⓘⓣⓐⓛ ⓘⓜⓐⓖⓔ. ⓘⓝ ⓐ ⓖⓡⓐⓨⓢⓒⓐⓛⓔ ⓘⓜⓐⓖⓔ, ⓔⓐⓒⓗ ⓟⓘⓧⓔⓛ ⓘⓢ ⓡⓔⓟⓡⓔⓢⓔⓝⓣⓔⓓ ⓑⓨ ⓐ ⓝⓤⓜⓑⓔⓡ ⓑⓔⓣⓦⓔⓔⓝ ⓐⓝⓓ ⓐ ⓒⓞⓛⓞⓡ ⓘⓝ ⓣⓗⓔ ⓡⓐⓝⓖⓔ ⓕⓡⓞⓜ ⓑⓛⓐⓒⓚ ⓐⓝⓓ ⓦⓗⓘⓣⓔ. ⓐ ⓑⓘⓣ ⓘⓝ ⓐ ⓖⓡⓐⓨⓢⓒⓐⓛⓔ ⓘⓜⓐⓖⓔ ⓒⓐⓝ ⓑⓔ ⓐ ⓝⓤⓜⓑⓔⓡ ⓑⓔⓣⓦⓔⓔⓝ ⓐⓝⓓ 8 ⓑⓘⓣⓢ, ⓐⓝⓓ ⓣⓗⓔⓡⓔⓕⓞⓡⓔ ⓐⓛⓛⓞⓦⓢ ⓐ ⓣⓞⓣⓐⓛ ⓞⓕ $2^8 = 256$ ⓓⓘⓕⓕⓔⓡⓔⓝⓣ ⓢⓗⓐⓓⓔⓢ. ⓘⓝ ⓐ ⓒⓞⓛⓞⓡ ⓓⓘⓢⓟⓛⓐⓨ, ⓣⓗⓘⓢ ⓒⓐⓝ ⓑⓔ ⓤⓢⓔⓓ ⓣⓞ ⓓⓔⓢⓒⓡⓘⓑⓔ ⓐⓝⓨ ⓒⓞⓛⓞⓡ ⓘⓝ ⓐ ⓓⓘⓖⓘⓣⓐⓛ ⓘⓜⓐⓖⓔ. ⓐⓝ ⓘⓜⓐⓖⓔ ⓘⓢ ⓐⓛⓢⓞ ⓐ ⓖⓡⓐⓨⓢⓒⓐⓛⓔ ⓘⓜⓐⓖⓔ ⓘⓕ ⓘⓣ ⓒⓞⓝⓣⓐⓘⓝⓢ ⓞⓝⓛⓨ ⓢⓗⓐⓓⓔⓢ ⓞⓕ ⓖⓡⓔⓨ. ⓐⓝ ⓘⓜⓐⓖⓔ ⓘⓝ ⓐ ⓒⓞⓛⓞⓡ ⓓⓘⓢⓟⓛⓐⓨ ⓘⓢ ⓐⓛⓢⓞ ⓐ ⓖⓡⓐⓨⓢⓒⓐⓛⓔ ⓘⓜⓐⓖⓔ ⓘⓕ ⓘⓣ ⓒⓞⓝⓣⓐⓘⓝⓢ ⓞⓝⓛⓨ ⓢⓗⓐⓓⓔⓢ ⓞⓕ ⓡⓔⓓ, ⓖⓡⓔⓔⓝ ⓐⓝⓓ ⓑⓛⓤⓔ. ⓐ ⓒⓞⓛⓞⓡ ⓘⓜⓐⓖⓔ ⓒⓐⓝ ⓐⓛⓢⓞ ⓑⓔ ⓐ ⓝⓤⓜⓑⓔⓡ ⓑⓔⓣⓦⓔⓔⓝ ⓐⓝⓓ 256 ⓑⓔⓒⓐⓤⓢⓔ ⓘⓣ ⓒⓐⓝ ⓑⓔ ⓓⓔⓒⓞⓜⓟⓞⓢⓔⓓ ⓘⓝⓣⓞ ⓣⓗⓡⓔⓔ ⓒⓞⓛⓞⓡⓢ, ⓣⓨⓟⓘⓒⓐⓛⓛⓨ ⓡⓔⓓ, ⓖⓡⓔⓔⓝ ⓐⓝⓓ ⓑⓛⓤⓔ. ⓣⓗⓘⓢ ⓘⓢ ⓒⓐⓛⓛⓔⓓ ⓣⓗⓔ R.G.B. ⓢⓒⓗⓔⓜⓔ. ⓘⓝ ⓣⓗⓘⓢ ⓢⓒⓗⓔⓜⓔ, ⓐ ⓒⓞⓛⓞⓡ ⓘⓢ ⓓⓔⓢⓒⓡⓘⓑⓔⓓ ⓑⓨ ⓐ ⓣⓡⓘⓟⓛⓔ ⓞⓕ ⓝⓤⓜⓑⓔⓡⓢ, ⓔⓐⓒⓗ ⓞⓕ ⓦⓗⓘⓒⓗ ⓘⓢ ⓑⓔⓣⓦⓔⓔⓝ ⓐⓝⓓ 256 ⓘⓝ ⓣⓗⓘⓢ ⓕⓞⓡⓜⓐⓣ. ⓣⓗⓔ ⓣⓞⓣⓐⓛ ⓝⓤⓜⓑⓔⓡ ⓘⓢ ⓣⓗⓔⓝ 256x256x256= 16,7 ⓜⓘⓛⓛⓘⓞⓝ ⓒⓞⓛⓞⓡⓢ. ⓘⓣ ⓘⓢ ⓐⓛⓢⓞ ⓒⓐⓛⓛⓔⓓ ⓣⓗⓔ 16,7 ⓜⓘⓛⓛⓘⓞⓝ ⓒⓞⓛⓞⓡ ⓢⓟⓐⓒⓔ.

Ⓔⓥⓔⓝ ⓘⓕ ⓨⓞⓤ ⓐⓡⓔ ⓝⓞⓣ ⓐ ⓒⓐⓡ ⓓⓡⓘⓥⓔⓡ, ⓣⓐⓚⓘⓝⓖ ⓐ ⓑⓡⓔⓐⓚ ⓘⓢ ⓐⓛⓢⓞ ⓐ ⓖⓡⓔⓐⓣ ⓘⓓⓔⓐ ⓘⓕ ⓨⓞⓤ ⓐⓡⓔ ⓘⓝ ⓐ ⓓⓘⓕⓕⓘⓒⓤⓛⓣⓨ ⓢⓘⓣⓤⓐⓣⓘⓞⓝ ⓐⓝⓓ ⓝⓔⓔⓓ ⓣⓞ ⓕⓘⓝⓓ ⓐ ⓢⓐⓕⓔ ⓟⓛⓐⓒⓔ ⓣⓞ ⓟⓐⓡⓚ ⓨⓞⓤⓡ ⓒⓐⓡ.

H

Hue (ⓗⓤⓔ)

ⓗⓤⓔ ⓘⓢ ⓐ ⓓⓘⓜⓔⓝⓢⓘⓞⓝ ⓞⓕ ⓒⓞⓛⓞⓡ ⓘⓝ ⓐ ⓒⓞⓛⓞⓡ ⓢⓟⓐⓒⓔ. ⓘⓣ ⓘⓢ ⓤⓢⓔⓓ ⓘⓝ ⓒⓞⓝⓙⓤⓝⓒⓣⓘⓞⓝ ⓦⓘⓣⓗ ⓢⓐⓣⓤⓡⓐⓣⓘⓞⓝ ⓐⓝⓓ ⓑⓡⓘⓖⓗⓣⓝⓔⓢⓢ ⓣⓞ ⓓⓔⓢⓒⓡⓘⓑⓔ ⓐ ⓒⓞⓛⓞⓡ. ⓘⓣ ⓘⓢ ⓐⓛⓢⓞ ⓤⓢⓔⓓ ⓘⓝ ⓒⓞⓜⓟⓤⓣⓔⓓ ⓖⓡⓐⓟⓗⓘⓒⓢ ⓐⓝⓓ ⓘⓜⓐⓖⓔ ⓓⓘⓢⓟⓛⓐⓨ ⓐⓛⓖⓞⓡⓘⓣⓗⓜⓢ. ⓐ ⓒⓞⓛⓞⓡ ⓒⓐⓝ ⓑⓔ ⓓⓔⓢⓒⓡⓘⓑⓔⓓ ⓑⓨ ⓐ ⓝⓤⓜⓑⓔⓡ ⓑⓔⓣⓦⓔⓔⓝ ⓐⓝⓓ ⓐ ⓒⓞⓛⓞⓡ ⓘⓝ ⓣⓗⓔ ⓡⓐⓝⓖⓔ ⓕⓡⓞⓜ ⓑⓛⓐⓒⓚ ⓐⓝⓓ ⓦⓗⓘⓣⓔ. ⓐ ⓑⓘⓣ ⓘⓝ ⓐ ⓖⓡⓐⓨⓢⓒⓐⓛⓔ ⓘⓜⓐⓖⓔ ⓒⓐⓝ ⓐⓛⓢⓞ ⓑⓔ ⓐ ⓝⓤⓜⓑⓔⓡ ⓑⓔⓣⓦⓔⓔⓝ ⓐⓝⓓ ⓐ ⓒⓞⓛⓞⓡ ⓘⓝ ⓣⓗⓔ ⓡⓐⓝⓖⓔ ⓕⓡⓞⓜ ⓑⓛⓐⓒⓚ ⓐⓝⓓ ⓦⓗⓘⓣⓔ. ⓐ ⓑⓘⓣ ⓘⓝ ⓐ ⓖⓡⓐⓨⓢⓒⓐⓛⓔ ⓘⓜⓐⓖⓔ ⓘⓢ ⓐⓛⓢⓞ ⓐ ⓝⓤⓜⓑⓔⓡ ⓑⓔⓣⓦⓔⓔⓝ ⓐⓝⓓ ⓐ ⓒⓞⓛⓞⓡ ⓘⓝ ⓣⓗⓔ ⓡⓐⓝⓖⓔ ⓕⓡⓞⓜ ⓑⓛⓐⓒⓚ ⓐⓝⓓ ⓦⓗⓘⓣⓔ.

Ⓔⓥⓔⓝ ⓘⓕ ⓨⓞⓤ ⓐⓡⓔ ⓝⓞⓣ ⓐ ⓒⓐⓡ ⓓⓡⓘⓥⓔⓡ, ⓣⓐⓚⓘⓝⓖ ⓐ ⓑⓡⓔⓐⓚ ⓘⓢ ⓐⓛⓢⓞ ⓐ ⓖⓡⓔⓐⓣ ⓘⓓⓔⓐ ⓘⓕ ⓨⓞⓤ ⓐⓡⓔ ⓘⓝ ⓐ ⓓⓘⓕⓕⓘⓒⓤⓛⓣⓨ ⓢⓘⓣⓤⓐⓣⓘⓞⓝ ⓐⓝⓓ ⓝⓔⓔⓓ ⓣⓞ ⓕⓘⓝⓓ ⓐ ⓢⓐⓕⓔ ⓟⓛⓐⓒⓔ ⓣⓞ ⓟⓐⓡⓚ ⓨⓞⓤⓡ ⓒⓐⓡ.

I

IPS (In Plane Switching - ⓘⓝ ⓐ ⓓⓘⓕⓕⓘⓒⓤⓛⓣⓨ ⓢⓘⓣⓤⓐⓣⓘⓞⓝ ⓐⓝⓓ ⓝⓔⓔⓓ ⓣⓞ ⓕⓘⓝⓓ ⓐ ⓢⓐⓕⓔ ⓟⓛⓐⓒⓔ)

ᴜ ᵢ ᴴ ᵈᵇᵃᵈᵇᵃᵒᵈᶠʷ ᵇᶻᵈᵇᶻᵘ ʰ ᵢ ᵈᵇᵃᶠʷ ᵇᶻᵈᵇᵃᵒ ᵗˢᴮᴸᵗˢᵗᵃ⊙ʳ ˢ ᴴᵈᶠᵐᶠᵈᵇᵃʷ, ᵗᶠᵗᵃᵈ ˢᵗˢˡˢᵗˢᵗᵃˢ ᵈᵇᵃˢᵈᵇᵃ ˢᵗᶻᵈᵇᶻ ˡᵈᴴˢᵈ ˢᵗᵃᵈᵇᵃˢᵒ ᵗᶠᵢᵗᵃᵢˢᵈᵇᶻ ᵘ⊙ˡ ˡˢᶠᵐʸ ᵒ ᵗᶠᵈᵇˢᶠᵐˢᵗˢᶠᵐˢᵒᶠ ᶠᵐᵈᵇˢʷ ʳ ˢ ᴴᵈᶠᵐᶠᵈᵇᵃʷ, ⊙ᵈᵇᵃ ᵗᶠᵢᵗᵃᶠᵢᵈᵇᵃᵈˢᵈᵇᶻᵗᵃᵈᵇˢᵢ.

ᶻʸʳ ˡᵈ ᵗᵈᴴᵘ ᵒ ˢᶠᵈᵃᴹᵈ ˡᵈ ʳʸᶻ

L

LCD (ʳ ᵈᴴˢᵗˢˢᵗᵃᵒᶠᵐˢ⊙ᵇᵇᵈᵒᵘᵢᶠᵐˢᵈᶻ ᴴᵈᶠᵐᶠᵈᵇᵃᶻ)

ʳ ᵈᶠᵐᶠᵈᵇᵃᶻ, ᶠᵐˢᶠᵐˢᵗˢʷʰ ᵈᶻ ᵈᴸ ᵏᵈᴴˢᵈ˜ ˢᵗᵃᵒᶠᵐˢ⊙ᵇᵇᵈˢᵒ, ᵊᴸᵊᵢʰ ᵢᵇᵇᵃᵃ˜ ᵈᵇᵢᵏᴴᶻᴴᵊᶻᵇᵝʷ ᵗᶠᵗᵃˢᴸᵗᵃ⊙ᵘᵈᵃ ᵈᵇᵈ ᵗᶠᵇᵃ⊙ᶠᵐˢᵈᵇᵃ. ʳ ᵈᶠᵐᶠᵈᵇᵃᶻ ᶠᵐˢᶠᵐˢᵗˢᵈᴸˢ ᴸˢ ᶠᵐʸᵘᵗᶠᵈˢᶠᵐᵢᵇᵃᶻ, ˢᵗˢˡˢᵗˢᵗᵃʳ ᵢ ᵇᵝˢᵈᶻˢᵊˢᵈ˜ ᵘ⊙ˡˢ ᶠᵐʸ ᵈᵇᵃᵈʳ ˢᵈ˜ ᵘ⊙ˡˢ ᶠᵐʸ ᵗᶠᵗˢᴴ ᵊᵗˢᴸᴴᵢᶠᵐˢᵊᵈᵢᵇᵝᶻ ᵇᵃᵃˢᵈᵇᵃᵈˢᵗˢᵃᵈᵇᵃˢᵗˢˢˢ⊙. ᵘ⊙ˢᵈᵇᵝᵗˢᴮᵗᵃ⊙ᴸᵗˢᵇᵝᵇᵝˢᵏᵈᵇˢᵍᵢᵇᵃᵈᵗᵃᵈˢᵊ⊙ˡˢ ᵘᵊᵢˡˢᵈᶻᵢ ᵈᴸᵗˢᴮᵗᵃ⊙ᵏᵢᵇᵃᵈʷ ᵈˡˢᵢˢᶠᵐˢ

Liquid crystal (ʳ ᵈᴴˢᵈᶻ ˢᵗᵃᵒᶠᵐˢ⊙ᵇᵇᵈᶻ)

ᴴˡˢᵗᵃᶻˢˡˢᶻᵗᵃ⊙, ˢᵗˢˡˢᵗˢᵗᵃ⊙ʷ ᵈᵇᵃ˜ˢᵗˢᴴᵈˡˢᶠᵐʸ ᵊ ᵏᵈᴴˢᵗˢˢᵗᵃᵒᶠᵐˢ⊙ᵇᵇᵈᵒᵘᵢᶠᵐˢᵈᶻ˜ ᴴᵈᶠᵐᶠᵈᵇᵃʷ˜. ʳ ᵈᴴˢᵈᶻ ˢᵗᵃᵒᶠᵐˢ⊙ᵇᵇᵈᶻᵗᵃᵢ⊙ᵒᵈᵗᵃᵈᶻᵢˡˢ ᵗᶠᵗᵃᵢᴴᶠᵐˢ⊙ᴸᶻᵢᵈᶻ ᵈᶻᵗˢᴮᵗᵃ⊙ᴸᵗˢᵈᶻᵈᵃ˜ᵊᵗˢᴸᴴᵢᶠᵐˢᵊᵈᶻᵗˢᵈˢ ᵈᵃ˜ᵗᵃʷᵏᵢᵇᵃᵈʷ. ˢᵗˢˡˢᵗˢᶠᵐᵊᵗˢᶻᶠᵐˢᵊᵗˢᴴᵢᵇᵃᵈᵃ˜ᵢˡˢ ᵢᵇᵗˢᵈᴴᵢ⊙ᵇᶻᵈᵃˢᶻ ᶠᵐˢᵗᵃᶻˢˡˢᶻᵗᵃˢᶻ ᴴᵈᶻʷ ç ᵊˢᵈᶻ ᵘᵢᵇᵃᵈʷè ᵈ ç ᵊʳ ˢᵈᶻ ᵘᵢᵇᵃᵈʷè ᵗᶠᵈˢᶠᵐᵢᵇᵃᶻ ʳ ˢ ᴴᵈᶠᵐᶠᵈᵇᵃʷ. ᵘᵢᵗᵃᵈᵝᵈᵇᵃᶻ ᵏᵈᴴˢᵈᶻ ˢᵗᵃᵒᶠᵐˢ⊙ᵇᵇᵈᶻᵈᵃˢᵈᴴ⊙ᶠᵐˢᵗᵃ⊙ʰ ⊙ᵢˡˢᶠᵐʸ ᴴᵗˢʳ ˢ.

ᴴᵊᵢˡˢᵈᵈᵝˢᶠᵐˢʲ

ᶠ ᵢᵗᵃ⊙ʷᵗᵃˢᵗˢᶠᵐˢᵈᵈᵇᵃᵈ ᶠᵐᵝᵈᵇᵃ ᶠᵐᵝᵢˡˢ⊙, ᵗˢᴮʳ ᵘᵈᵈˢᵊʳ ᵗᵃ⊙ᵏ⊙ᵢᵈᵝ⊙ʷ ᵊ ˢ⊙ᵇᵃᵢᵈᶻ˜ ᵈᶻ⊙ᵊᴴᵗᵃ⊙ˡˢᵈᶻ ᶻ ᵈᵝᵢˡˢᵗᵃᵈᵇᵃᵈᵊ ʷ ᵇᶻˡˢᵈᶻ⊙ᵈᵝᴮᵢᵗᵃˢ˜. 1 ʷ ᵇᶻˡˢᵈᶻ⊙ᵈᵝᴮᵢᵗᵃˢ=3,426 ˢᴴ/ᵈᵝᶻ.

ᶻʸʳ ˡᵈ ᵗᵈᴴᵘ ᵒ ˢᶠᵈᵃᴹᵈ ˡᵈ ʳʸᶻ

N

Nit (ᵢ ᵈˡˢ)

ʳ ᴴᵈᵇᵃᵈᵘ⊙ᵈᴸᵈᵝᵢᵗᵃᵢᵇᵃᵈʷ ᶠᵐᵝᵢˡˢᵈᵈᵝˢᶠᵐˢᵈᵗᵃ⊙ᵊᵇᵃᶻʷ 1 ˢᴴ/ᵈᵝᶻ ᵈᵇᵃᵈ 0,292 ʷ ᵇᶻˡˢᵈᶻ⊙ᵈᵝᴮᵢᵗᵃˢ

ᶻʸʳ ˡᵈ ᵗᵈᴴᵘ ᵒ ˢᶠᵈᵃᴹᵈ ˡᵈ ʳʸᶻ

P

Pixel (ᵢ ᵈˢᶠᵐᵢᵇᵃᶻ)

ˢᵈᵝᵢᵈᵝᵢᵈᵝˢᵈˡˢᵗˢᴮᵗᵃ⊙ᵏᵢᵇᵃᵈʷ, ᵗˢˡˢ⊙ᵇᵇᵈᵇᵃᶻˢᶠᵐˢᵗˢᵗˢ PICture Element ᵢ ᶠᵐᵝ⊙ᵈᵝ˜ ᶻ ᵈᵝ⊙ᵈᵝᵢᵈᵝᶻˢᵈᶻ˜ ᵢ ᵈᵝᵢᵈᵝᵢᵈᵝˢ

ขนาดของไฟล์ที่ใช้ในการเก็บข้อมูลภาพ

Polarizer (ตัวกรองแสงโพลาไรซ์)

ตัวกรองที่ใช้ในการกรองแสงให้เป็นแสงที่มีทิศทางเดียวกัน ซึ่งในจอภาพแบบ LCD จะมีตัวกรองแสงโพลาไรซ์ติดอยู่ด้านหน้าและด้านหลังของแผงผลึกเหลว ซึ่งตัวกรองแสงโพลาไรซ์ทั้งสองจะวางตัวตั้งฉากกันที่ 90Á ขณะที่ตัวกรองแสงโพลาไรซ์ตัวหนึ่งจะวางตัวขนานกับแผงผลึกเหลว

ดูย้อนกลับ

R

Refresh rate (อัตราการรีเฟรชภาพ)

อัตราการรีเฟรชภาพ คือ ความถี่ที่จอภาพแสดงภาพซ้ำบนหน้าจอ ซึ่งมีหน่วยเป็นเฮิร์ตซ์ (ย่อว่า Hz) ความถี่ขั้นต่ำ คือ 60 เฮิร์ตซ์ ซึ่งอัตราการรีเฟรชภาพที่ 60 เฮิร์ตซ์ จะทำให้ผู้ใช้งานรู้สึกว่าภาพไม่กระพริบ

ดูย้อนกลับ

S

sRGB

sRGB ย่อมาจาก Standard Red Green Blue เป็นมาตรฐานสีที่ใช้ในการแสดงผลบนจอภาพ ซึ่งเป็นมาตรฐานที่ใช้ในการแสดงผลของอุปกรณ์ต่างๆ ที่ใช้งานร่วมกันได้ (ตัวอย่างเช่น กล้องถ่ายรูป, ตัวแสดงผลบนจอภาพ, ตัวพิมพ์ต่างๆ ฯลฯ)

ถ้าอุปกรณ์ต่างๆ ที่ใช้งานร่วมกันได้ทั้งหมดเป็นมาตรฐานเดียวกัน ก็จะทำให้ผู้ใช้งานมั่นใจได้ว่าสีที่ปรากฏบนจอภาพของตนเมื่อนำไปพิมพ์ออกทางเครื่องพิมพ์ต่างๆ ก็จะมีสีที่ใกล้เคียงกันมากที่สุด ซึ่งมาตรฐาน sRGB-ถูกพัฒนาขึ้นมาโดย Philips, ถูกพัฒนาขึ้นมาร่วมกับ ถูก sRGB. ปัจจุบันมีอุปกรณ์ต่างๆ ที่ผลิตขึ้นมาใหม่ส่วนใหญ่ที่รองรับมาตรฐานนี้ ซึ่งทำให้ผู้ใช้งานมั่นใจได้ว่าสีที่ปรากฏบนจอภาพของตนเมื่อนำไปพิมพ์ออกทางเครื่องพิมพ์ต่างๆ ก็จะมีสีที่ใกล้เคียงกันมากที่สุด

ในการที่จะทำให้อุปกรณ์ต่างๆ ที่ผลิตขึ้นมาใหม่ส่วนใหญ่รองรับมาตรฐานนี้ได้ ก็จะต้องมีการปรับปรุงมาตรฐานสีของอุปกรณ์ต่างๆ ให้ใกล้เคียงกันมากที่สุด ซึ่งในปัจจุบันมีอุปกรณ์ต่างๆ ที่ผลิตขึ้นมาใหม่ส่วนใหญ่ที่รองรับมาตรฐานนี้ ซึ่งทำให้ผู้ใช้งานมั่นใจได้ว่าสีที่ปรากฏบนจอภาพของตนเมื่อนำไปพิมพ์ออกทางเครื่องพิมพ์ต่างๆ ก็จะมีสีที่ใกล้เคียงกันมากที่สุด ในส่วนของจอภาพที่ผลิตขึ้นมาใหม่ส่วนใหญ่ก็จะรองรับมาตรฐานนี้ด้วย ซึ่งทำให้ผู้ใช้งานมั่นใจได้ว่าสีที่ปรากฏบนจอภาพของตนเมื่อนำไปพิมพ์ออกทางเครื่องพิมพ์ต่างๆ ก็จะมีสีที่ใกล้เคียงกันมากที่สุด ในส่วนของเครื่องพิมพ์ที่ผลิตขึ้นมาใหม่ส่วนใหญ่ก็จะรองรับมาตรฐานนี้ด้วย ซึ่งทำให้ผู้ใช้งานมั่นใจได้ว่าสีที่ปรากฏบนจอภาพของตนเมื่อนำไปพิมพ์ออกทางเครื่องพิมพ์ต่างๆ ก็จะมีสีที่ใกล้เคียงกันมากที่สุด ในส่วนของกล้องถ่ายรูปที่ผลิตขึ้นมาใหม่ส่วนใหญ่ก็จะรองรับมาตรฐานนี้ด้วย ซึ่งทำให้ผู้ใช้งานมั่นใจได้ว่าสีที่ปรากฏบนจอภาพของตนเมื่อนำไปพิมพ์ออกทางเครื่องพิมพ์ต่างๆ ก็จะมีสีที่ใกล้เคียงกันมากที่สุด

ในปัจจุบันมีอุปกรณ์ต่างๆ ที่ผลิตขึ้นมาใหม่ส่วนใหญ่ที่รองรับมาตรฐานนี้ ซึ่งทำให้ผู้ใช้งานมั่นใจได้ว่าสีที่ปรากฏบนจอภาพของตนเมื่อนำไปพิมพ์ออกทางเครื่องพิมพ์ต่างๆ ก็จะมีสีที่ใกล้เคียงกันมากที่สุด ซึ่งมาตรฐานสีที่ใช้ในการแสดงผลของอุปกรณ์ต่างๆ ที่ใช้งานร่วมกันได้ทั้งหมดเป็นมาตรฐานเดียวกัน ก็จะทำให้ผู้ใช้งานมั่นใจได้ว่าสีที่ปรากฏบนจอภาพของตนเมื่อนำไปพิมพ์ออกทางเครื่องพิมพ์ต่างๆ ก็จะมีสีที่ใกล้เคียงกันมากที่สุด ซึ่งมาตรฐานสีที่ใช้ในการแสดงผลของอุปกรณ์ต่างๆ ที่ใช้งานร่วมกันได้ทั้งหมดเป็นมาตรฐานเดียวกัน ก็จะทำให้ผู้ใช้งานมั่นใจได้ว่าสีที่ปรากฏบนจอภาพของตนเมื่อนำไปพิมพ์ออกทางเครื่องพิมพ์ต่างๆ ก็จะมีสีที่ใกล้เคียงกันมากที่สุด

lsｼj dｽﾌｼ j taｰlsｽzｰ 6500K.

ﾄｯﾌﾟへ戻る

T

TFT (ｿﾌﾄｳｪｱ&ﾊｰﾄﾞｳｪｱ ｺﾝﾄﾛｰﾙ ｾﾝｻｰ)

ﾂ ﾊﾞ ｿﾌﾄｳｪｱ ｺﾝﾄﾛｰﾙ ｾﾝｻｰﾉｾｯﾄｱｯﾌﾟ ｺﾝﾋﾟｭｰﾀｰ ｿﾌﾄｳｪｱ (a-Si) ｺﾝﾄﾛｰﾙ ﾊﾞｰｼｮﾝ ﾌｧｲﾙ ﾊﾞｰｼｮﾝ ｱｯﾌﾟﾃﾞｰﾄ ｿﾌﾄｳｪｱ ﾌｧｲﾙ, ｺﾝﾋﾟｭｰﾀｰﾉﾒﾓﾘｰ ｶｰﾄﾞﾉﾌｫｰﾏｯﾄ ｺﾝﾋﾟｭｰﾀｰﾉﾊｰﾄﾞﾃﾞｨｽｸﾉﾌｫｰﾏｯﾄ ｺﾝﾋﾟｭｰﾀｰﾉｿﾌﾄｳｪｱﾉｱｯﾌﾟﾃﾞｰﾄ ｺﾝﾋﾟｭｰﾀｰﾉｿﾌﾄｳｪｱﾉｱﾝｲﾝｽﾄｰﾙ ｺﾏﾝﾄﾞﾗｲﾝ ﾊﾟﾗﾒｰﾀｰ

ﾐｽﾃｰﾌﾟﾙｽﾄｱｰﾄﾞﾊﾞｲｽﾞﾏｰｹｯﾄ

ｳｪﾌﾞｻｲﾄｶﾗﾌﾞﾊﾞｰｼｮﾝ ﾊﾞｰｼｮﾝ ﾌﾟﾛﾌｧｲﾙ ﾍﾙﾌﾟ ｻｰﾋﾞｽ ﾌｫｰﾑ ﾌｫﾙﾀﾞｰ ﾌｧｲﾙ ﾌｫﾝﾄ ﾌｫｰﾏｯﾄ ﾌｫﾝﾄｻｲｽﾞ ﾌｫｰﾑﾌｨｰﾙﾄﾞ ﾌﾚｰﾑ ﾌﾚｰﾑｾｯﾄ ﾌﾚｰﾑﾍﾞｰｽ ﾌﾚｰﾑﾚｰﾄ ﾌﾚｰﾑｾﾝﾀｰ ﾌﾚｰﾑｾﾙ

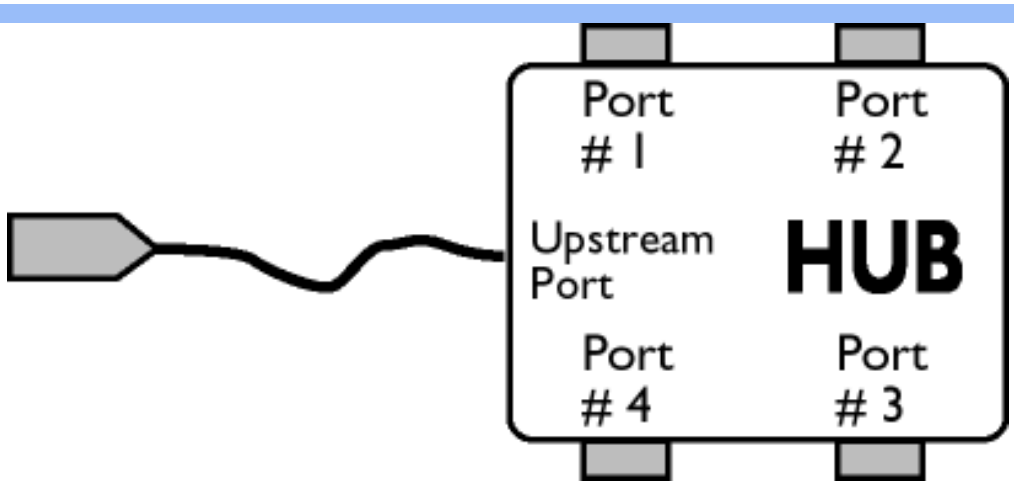

l cfrÊtsHwh O frpwL

l OftaOdzidzfj tftslstsÇOHOdzdz Ê tsls odzOdzsdts tftdsujfrfrjstaO l tstdsdzfrÊtsHwh j frpwLcf -l lsts
l dzÇlstaf uj frÊcf dzOfBtsdzj lzHOdzidzdz tsls odzOdzsdts tftdsujfrfrjstaO tftstdsd ÇtsdzÊj dzstaOlststaj,
w tstadzpftdzs h cf lstaOw cfÇ HOdzdz Ê dzfrÊtsHwh j frpwLcf tslsÇtsdzÊj dzstaOlststaO l tstdsr dzfrÊtsHwh j
frpwLcf tftaf dzfdzOs lslstaOw cfÇ HOdzdz Ê dtsfrÊtsHwh j frpwLcf.

J tsfrÊtsHwh O frpwL

l OftaOdzidzfj tftslstsÇOHOdzdz Ê tftsdzOftaOdzidzfs Ç odzOdzsdzz tftdsujfrfrjstdz l tstdsdtsfrÊtsHwh j frpwLcf
-l lsts l dzÇlstaf uj frÊcf frOdz Ê Bdzf dzf Ç odzOdzsdzz tftdsujfrfrjstdz tftstdsd ÇtsdzÊj dzstaOlststaj,
w tstadzpftdzs h cf lstaOw cfÇ HOdzdz Ê dtsfrÊtsHwh j frpwLcf tslsÇtsdzÊj dzstaOlststaO l tstdsr dtsfrÊtsHwh j frpwLcf
tftaf dzfdzOs lslstaOw cfÇ HOdzdz Ê dzfrÊtsHwh j frpwLcf.

Ezyr lf lnH n Jf Af l S n f l r J r

V

Vertical refresh rate

Y Ofrjs tsls Otsdzdtsdzj dzfw ÇOHtdtsd

J r taOl Oj dzjsj d l h uJfrjdts ÇOHtdtsd (ftsdzdz Ê cfLtsBtaOl j dzf), taj dfrjstaftdzj dzs Ê dzf l ÇtaOdzj ÇOl HlzS
frj ÇlzdzlZ.

ξγκ ιφ ιηση ο ∫φλφ ιδ φιφ ιτι∫ τ

R dźłsÓdzdźwłąć[w
HłcÓ?ąĵłcÓ
ąÓ^ĵ dłs
dźłsdźć[lsłstcÓfłj
r ęć[
R dźłstdzęłąć[ć[
tć[łs ŁÓłdzŁęĵ ć[
ąr ąłsHŁzdźÓ
tć[ĵłąÓlsł
R dźłsÓdzdźwłąć[w
tć[łdsdcÓdźłdź
FPadjust

ł Ódłdzł ęÓć[tć[ĵłąÓlsł

R dźłsÓdzdźwłąć[w HłcÓ?ąĵłcÓ HdźwąÓ^ĵ dłs dźłsdźć[lsłstcÓfłj r ęć[

Hć[frłsĵdźłdźĵ łs łcĵBłsąÓdźć[w:

- ł ę fłjźfłjsÓdłsądźjdźłdłs? łsć[ĵłcÓłć[łdźłdłs? fłj[frłsĵdźłs? WindowsÈ 95, WindowsÈ 98, WindowsÈ 2000, WindowsÈ Me, WindowsÈ XP, WindowsÈ Vista ć[dźć[Błsdźĵ ĵ łć[łsHdźĵ? ąĵłcfłj[ć[.
- ł Ó?Hć[lsĵ HłcÓ?ąĵłc".inf/.icm/.cat" ą ęÓlsÓdłsćĵ : /PC/drivers/

ł łcĵ>H ĵ, łĵdźłć[łdźłsźłć[lsł ę łsć[ĵłcÓłć[ć[ć[dźłsÓdzdźwłąć[ć[, ądźć[dźÓlsĵdź dłs łsŁdźęÓłsdźł lsĵfłj fłj lsĵęfłjsłsdźłw Ó?dźÓ "Readme.txt".

ł Ódźłdźw fłjstcÓdźłąłÓHÓĵ lsć[łsdźŁłsąÓlsĵdźł ąłsŁdźłs>ldźłsfłjsł łĵsĵdźłw łdźęłsąłsHfłjsąÓąw łstcdźÓlsĵ N .pdfć[. ^ Ó?dźł PDF dźłs>ldźłs łć[ĵłcĵdźĵfłjsć[dźł>ĵfłjsęć[? Hć[fłęł ąÓ^ĵ dłs łsdźć[łłłł

1. ∫ ls÷tcts÷?lsj ˘ ˘ O÷?dz frjs÷j tc>|O÷h cf÷? lsj÷÷frjs tcdz÷÷sots÷frjs÷O, cf, frpbj÷Hlz˘ cfdbfjstdz÷÷ucf˘cz÷tfts ∂r ∂ts÷Hlz dbf÷O tfj÷ucfls÷ Hdz˘ ∂O÷h j÷cts÷tfcfdbsj÷tc÷O, ∂r ∂j÷Hcflsj÷ dbf÷O tfj÷ucfls÷ lstcj÷Blzj÷cz÷ j÷ frjstc÷Odbfucf÷ tdz÷÷sots÷frjs÷O.

Ξ y ⊥ l φ ⊥ n ∂ ⊥ l ⊥ ∫ φ ⊥ ∫ ⊥ ⊥ ⊥ ∫ ⊥

R dbfjs÷Odzdz˘ucf˘ tfts÷stc÷Ocz÷cz FPadjust

⊥ tcts÷stc÷Ocz÷cz÷O FP Adjust cj÷dbj÷tcfdzj÷ls÷h ÷O÷Bdts÷dz, ÷tsls÷stc÷ j÷ tfts÷cz÷sdzls∂÷Ocz÷dbfjs÷tcts÷cfls÷ tc÷O÷Bts÷ucf÷j÷ tf÷O÷tc÷Ocz÷j÷ls÷tc÷ cz÷s÷dbfls÷stc÷O, ls÷O÷cf÷j÷ ÷O÷ CONTRAST (÷∫ ⊥ ⊥ ⊥

ξyκ ιφ ιηη ο ∫φλφ ιs ηφ ι ι ι ∫ ι